3. Instruments and Controls

3-1. Instrument panel and Front controls

Important to owner, read carefully

Mechanical type

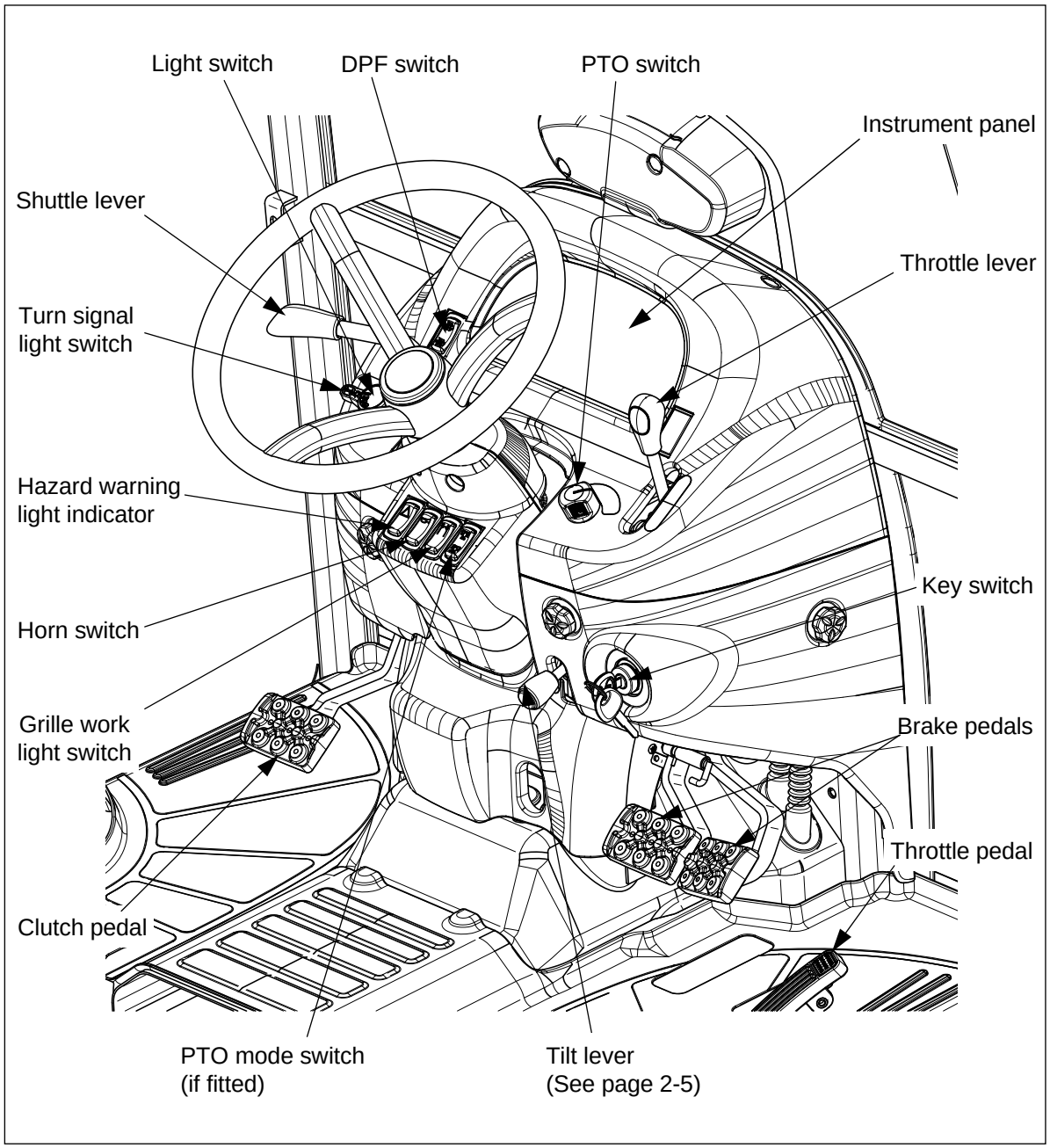

HST type

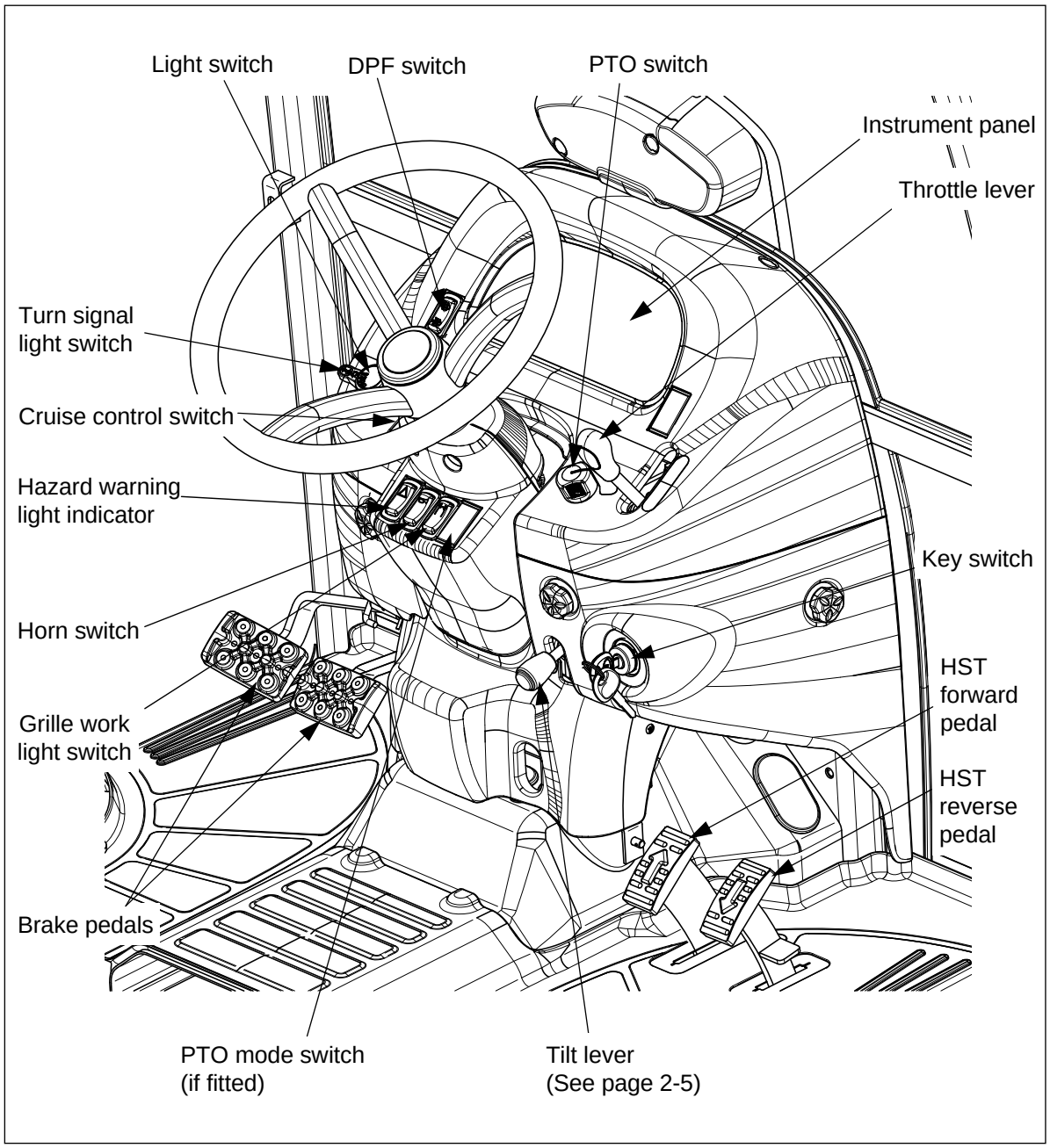
Light switch
DPF switch
PTO switch
Instrument panel
Throttle lever
Turn signal light switch
Cruise control switch
Hazard warning light indicator
Key switch
Horn switch
HST forward pedal
Grille work light switch
HST reverse pedal
Brake pedals
PTO mode switch (if fitted)
Tilt lever (See page 2-5)

(1) Instrument panel

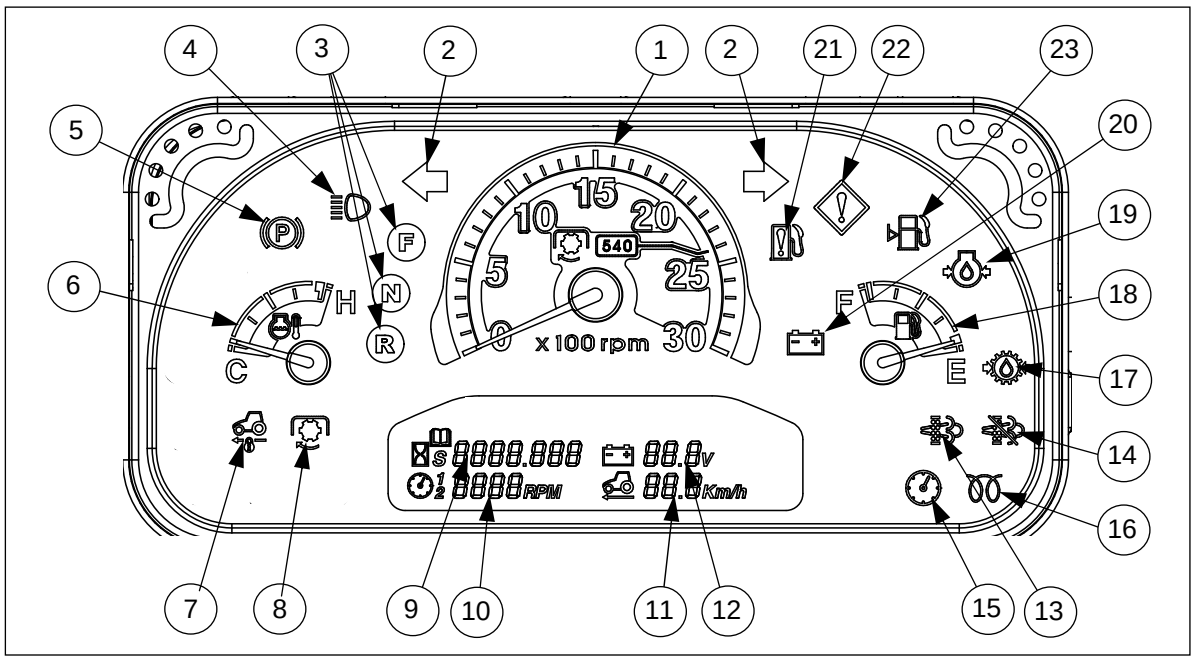

1. Tachometer
2. Turn signal indicators(Left/Right)
3. Forward-reverse indicator(optional)
4. High beam indicator
5. Parking brake indicator
6. Engine coolant temperature gauge
7. Cruse control drive indicator(Not used)
8. PTO operation indicator
9. Hour meter & Engine error code
10. Engine Speed Control(ESC) & FMI code
11. Speedometer(Not used)
12. Battery voltage
13. DPF Regeneration indicator
14. DPF inhibited regeneration indicator
15. ESC mode indicator
16. Cold start aid indicator
17. Hydraulic oil pressure indicator(Not used)
18. Fuel level gauge
19. Engine oil pressure indicator
20. Battery charging warning indicator
21. Fuel filter warning indicator
22. Engine error warning indicator
23. Low fuel level warning indicator

(1) Tachometer

- The tachometer shows the engine revolutions per minute (“30” means 3000rpm).

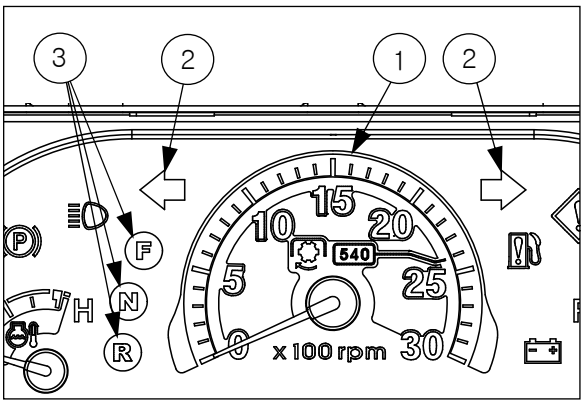

(2) Turn signal indicators (Left/Right)

- When the front/rear turn signal lights are blinked, This indicator shall be blinked simultaneously.

(3) Forward-reverse indicator (Not used)

(4) High beam indicator

- When turning on high beam of the headlamp, This indicator shall be ON simultaneously.

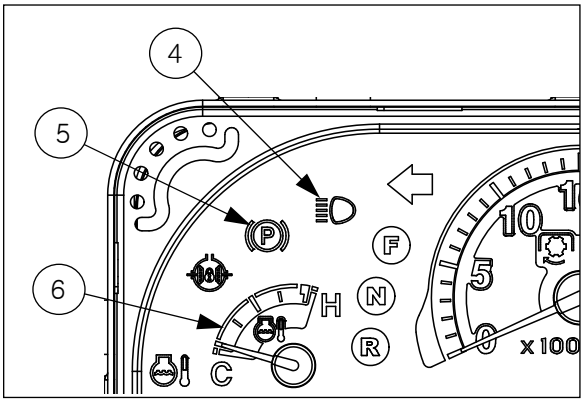

(5) Parking brake indicator

- This indicator shall be ON when applying the parking brake.

(6) Engine coolant temperature gauge

- This gauge indicates the temperature of coolant during operation.
- The closer the needle approaches “**H**”, the higher the temperature of engine coolant is.
- The coolant is very hot. When checking the coolant, comply with instructions of the section 5 “Maintenance and Lubrication” in this manual.

(7) Cruse control drive indicator (HST only)

- When operating cruise control switch on the front console, this indicator shall be ON.

(8) PTO operation indicator

- This indicator shall be ON when the PTO switch is placed on “ON” position, and the rear PTO is working.

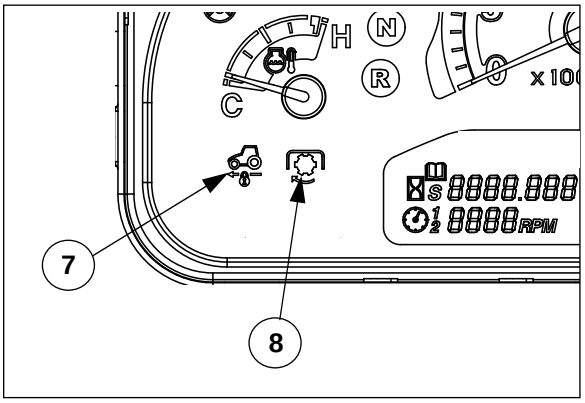

(9) Hour meter & Engine diagnosis error code

- If any error does not exist on tier-4 engine control, in normal operation condition, accumulated operation hour shall be displayed
- If the display shows “0019.1”, it means the tractor has been operated for 19.1hours so for (19 hours and 6 minutes).
- If any errors related to the Tier-4 engine control happened, Engine diagnosis error codes and hour meter shall be displayed by turns with Engine error warning light (22).
- At this time, after escaping from emergency area, contact your authorized local dealer for check.

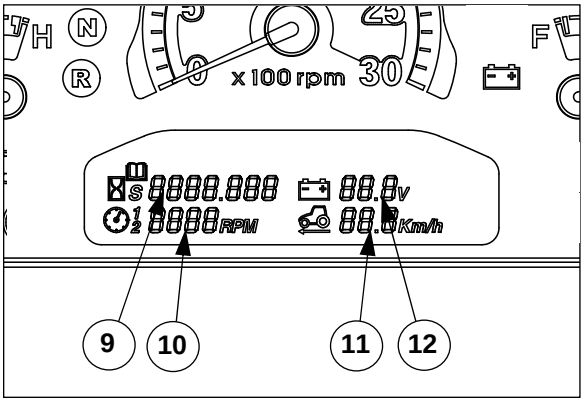

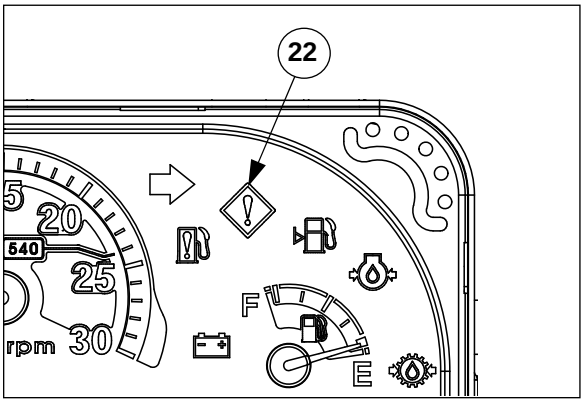

(10) Engine Speed Control(ESC) and FMI code

- The RPM stored on ECU for Engine Speed Cruise Control(ESC) is displayed in normal status.
- If any errors related to the Tier-4 engine control happened, FMI code to be able to know the error type or pattern shall be displayed by turns additionally with Engine diagnosis error codes (15).

(11) Speedometer (Not used)

(12) Battery voltage

- Available battery voltage is displayed.

(13) DPF Regeneration indicator

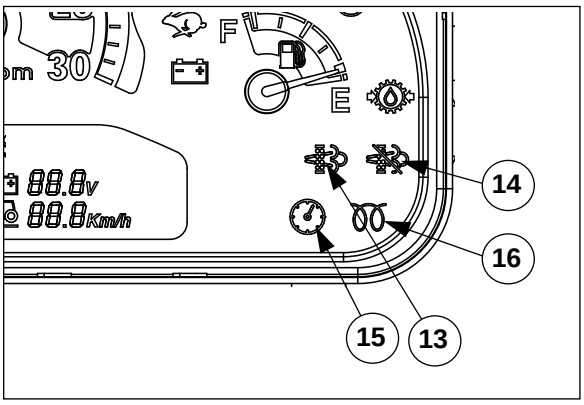

- When the regeneration process in the DPF is working, this indicator shall be turned on with continuous light. It is not a failure but normal operation.
- ***If this indicator is blinking, it means that the soot is over accumulated in the DPF. Comply with the instructions of the section 3-1-(8), "DPF switch" .***
- *For further information about this indicator, See page 3-12.*

(14) DPF inhibited regeneration indicator

- When the DPF switch is pressed to **Inhibited regeneration mode**, this indicator shall be ON and the regeneration of the DPF shall be halted.

(15) ESC mode indicator

- This indicator is turned on when operating ESC main switch to ON position and Engine Speed Control (ESC) is ready.

(16) Cold start aid indicator

- If the cold start aid device is working, this indicator shall be ON. After the indicator is OFF, start the engine.

(17) Hydraulic oil pressure indicator (Not used)

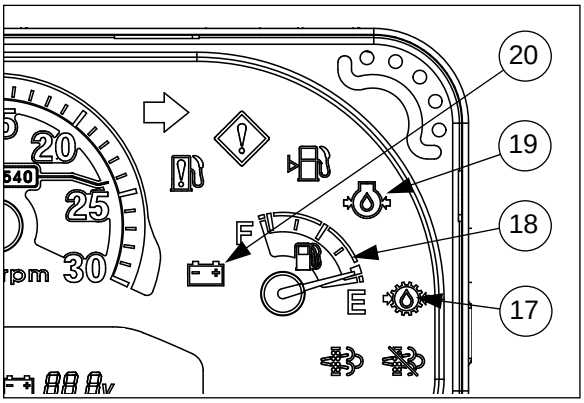

(18) Fuel level gauge

- This gauge indicates the remaining amount of fuel.
- If the needle indicates "**E**", fill the fuel tank immediately with fuel.

(19) Engine oil pressure indicator

- This indicator shall be ON when turning the key switch to ON position, and shall be OFF after the engine starts. If not, stop the engine immediately, and check the engine lubrication system, engine oil level, engine oil pressure and so on.
- Contact your authorized dealer to check the engine lubrication system.

(20) Battery charging warning indicator

- This indicator shall be ON when turning the key switch to ON position, and shall be OFF after starting engine.
- If not, contact your authorized local dealer for checking electrical charging system.

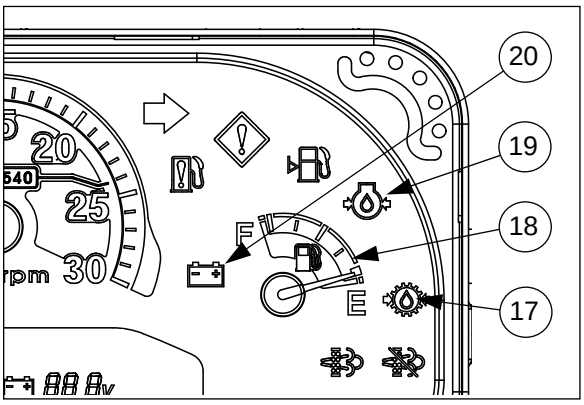

(21) Fuel filter warning indicator

- When there is excess water in the fuel filter, this indicator shall be ON.
- Remove the water in the fuel filter. *(See section 5 in this manual)*

(22) Engine error warning indicator

- If there is a fault on the Tier-4 engine control, this indicator shall be turned on and be blinking with Engine error diagnosis code (9).
- At this time, after escaping from emergency area, contact your authorized local dealer for check.

(23) Low fuel level warning indicator

- When the fuel in the fuel tank is under minimum level, this indicator shall be ON.
- If this indicator turns on, fill the fuel tank immediately with fuel.

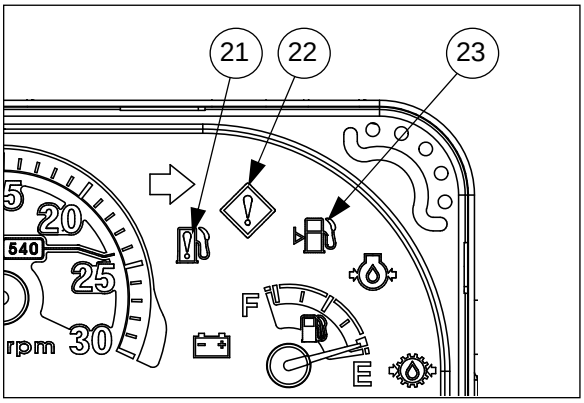

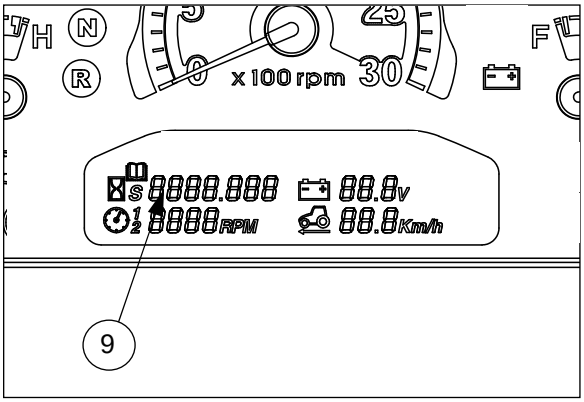

(2) Key switch

- **OFF** - power off (engine stop)
- **ON/Preheat** - power on & automatic glow
- **Start** - engine start

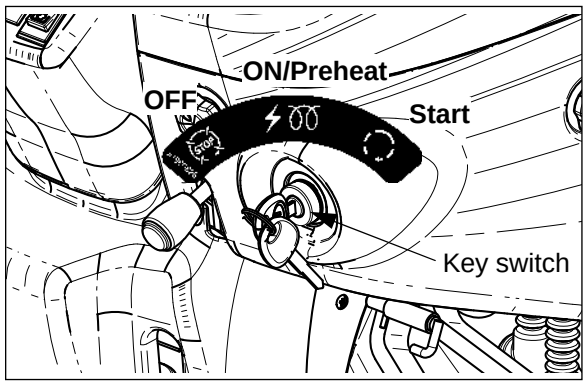

⚠ Caution	▶ Because the safety switch for start is engaged, start the tractor after pressing clutch pedal. ▶ If the tractor is not in use, the ignition key should be removed.

(3) Turn signal light switch

- This switch is used to give information to other vehicles when turning to the left or right.
- If turning the switch to clockwise, the right turn signal lights are blinking.
  -If turning the switch to counter-clockwise, the left turn signal lights are blinking.

⚠ Caution	▶ When changing direction during running on the road, operate the turn signal lights to inform other vehicles of your direction.

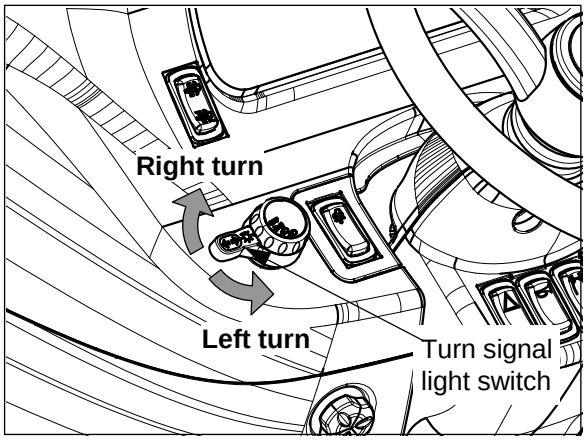

(4) Light switch

- **OFF** - Instrument panel and lights OFF

- Instrument light and side lights ON

- Instrument light, side lights, head lights (low beam) ON

- Instrument light, side lights, head lights (high beam) ON

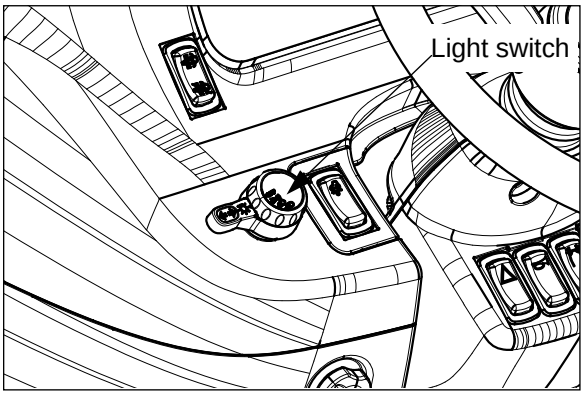

⚠ Caution	▶ When passing with other vehicles in the opposite lane at night, turn the headlights to low beam not to disturb on coming cars.

(5) Horn switch

- Press the upper side of the switch for sounding off the horn.

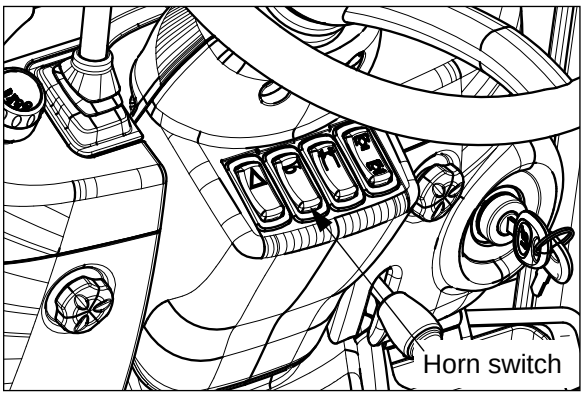

(6) Hazard warning light switch

- This is used to warn other vehicles in case of emergency status.
- If pressing the upper side of the triangle switch, all turn signal lights (front/rear, left/right) shall blink.

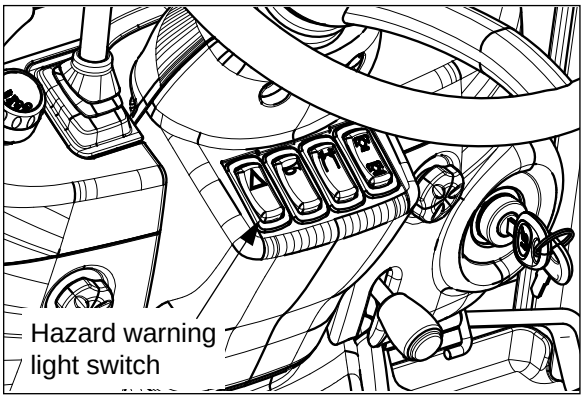

Notice	▶ If using the hazard warning lights for a long time, it may cause a increase of electrical consumption. Do not operate these lights for a long time.

(7) Grille work light switch

- This is used to turn on/off the work light of the front grille.
- **ON** - Press the upper side of the switch.
  OFF - Press the lower side of the switch.

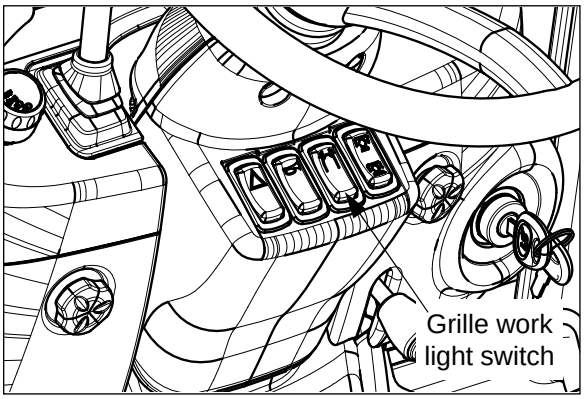

(8) DPF switch

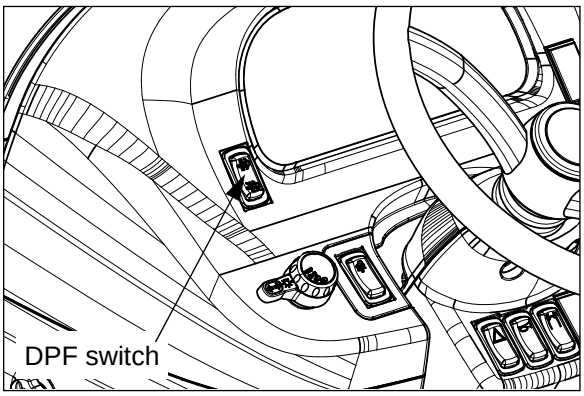

- This switch is used to select the Regeneration mode or the Inhibited regeneration mode.

  - R**egeneration mode** : If the soot is loaded over the designated level and the engine is warmed up enough, the DPF regeneration shall be processed automatically by ECU.

  - **Inhibited regeneration mode :** The regeneration mode is disabled manually until operator inputs the signal for exiting this mode.

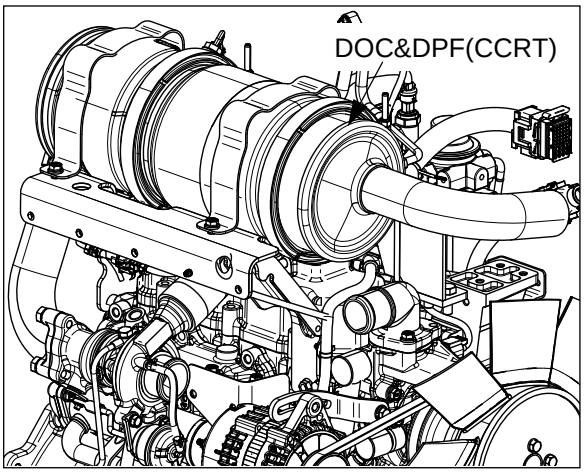

① Definitions of system components and operation

- The following terms will define the system components and operational modes.

System components and operation	Definition
Diesel Oxidation Catalyst (DOC)	a catalytic converter that reduces emission element such as hydrocarbons, carbon monoxide and unburned fuel.
Diesel Particulate Filter (DPF)	a filter that captures soot from the engine exhaust
Regeneration	This is the process of burning/cleaning of the soot that is contained in the DPF.
Inhibited regeneration	The regeneration process is disabled by the use of the DPF switch.

② DOC&DPF(CCRT)

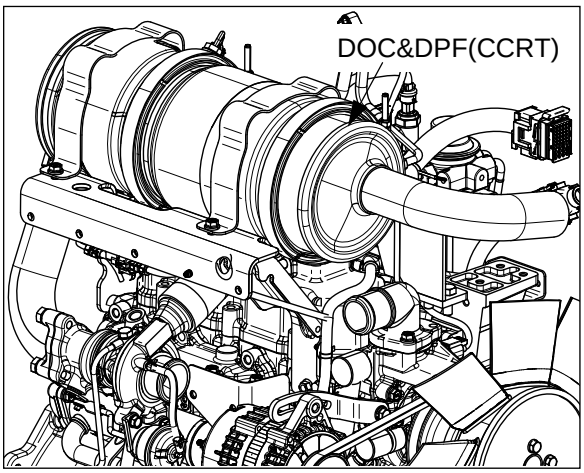

- The Diesel Oxidation Catalyst (DOC) and the Diesel Particulate Filter (DPF) is to reduce engine exhaust hydrocarbons, carbon monoxide and other toxic gases. This system converts exhaust emissions to harmless carbon dioxide and water. The DPF also traps Particular Matter (PM)
- To meet Tier 4 emission regulations, the CCRT(Catalyzed continuous regenerating trap) integrated with DOC and DPF combination is installed on your engine.
- It is very important to read this operator's manual and understand the safe operation of your tractor. If you have any questions in the operation of this emission system, please contact an authorized local LS tractor dealer.

⚠Caution	▶**Burn hazard !** During the Diesel Particulate Filter (DPF) regeneration process, the exhaust stack and fixed hood area becomes extremely hot. Allow area to cool before servicing or working near the exhaust system components. Failure to comply could result in minor or moderate injury.

⚠Warning	▶**Fire hazard!** During the Diesel Particulate Filter (DPF) forced regeneration process, the exhaust stack and fixed hood area becomes extremely hot. Park the machine outside and away from combustible or highly flammable material. Failure to comply could result in death or serious injury.

③ Fuel and engine lubrication oil specification

- Fuel specification
  Use only Ultra low sulfur diesel fuel (S15) in your tractor.

NOTICE	▶Use of diesel fuel other than Ultra low sulfur fuel may adversely affect the engine and the DPF performance.

- Engine oil specification
  Use only DPF compatible (CJ-4) oil in your tractor engine.

NOTICE	▶Use of any engine oil other than (CJ-4) may clog the DPF earlier than expected and fuel usage may increase.

④ Indicator illumination on instrument panel

- The indicators related to the DPF regeneration have several illumination figures and its meanings as follows. Read carefully and keep in mind the instructions well.

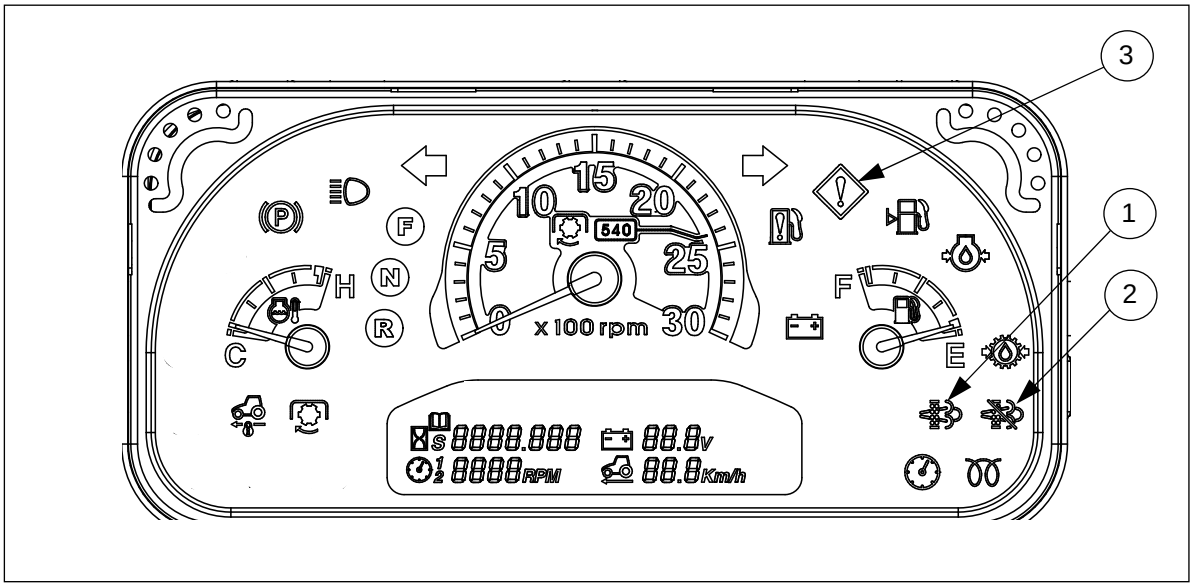

Indicators	figures	Possible cause	Symptom & Actions	Remarks
1. DPF regeneration indicator	Continuous ON	When the regeneration is processing.	- Normal state	ON
	BLINK(1sec)	When the soot's rate is over 100%	- Press and hold the upper side of the DPF switch over one second for regeneration.	BLINK (1sec)
	BLINK(0.5sec) + Engine error warning indicator	When the soot's rate is over 150%	Engine power reduction. HAVE TO contact your authorized local dealer for check.	BLINK (0.5sec) + ON
2. DPF inhibited regeneration indicator	Continuous ON	When the Inhibited regeneration mode is working	DPF regeneration is delayed or stopped.	ON

⑤ Regeneration mode

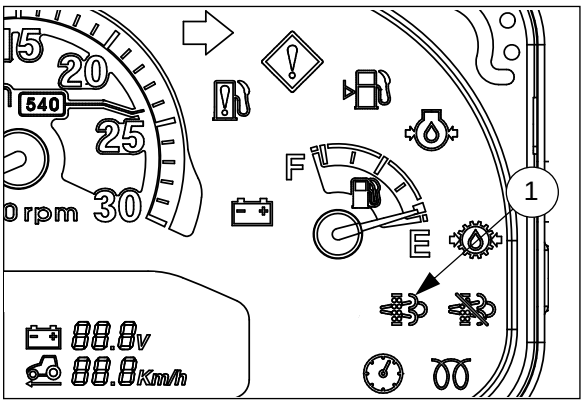

- In this mode, the operator does not have to take any actions, the system is activated automatically by the engine electronic controller.

NOTE : *The regeneration is the normal operating mode.*

- The regeneration shall be activated by ECU ;
  - When soot's rate reaches **100% or more**.
  - When the engine is **warmed up enough.**
  - When the **DPF switch is not pressed to the Inhibited regeneration mode.**

NOTE : *Regeneration shall be lasted for* ***approximately 15 to 20 minutes****.*

NOTE : *The regeneration* ***by switch operation*** *shall be activated when* ***soot's rate is 30% or more.***

- During the regeneration, the DPF regeneration indicator(1) shall be turned on.
- In case of turning off the engine while the regeneration is processing, the regeneration is to resume again when restarting the engine.

NOTICE	▶ If engine is turned off during the regeneration, soot will not be completely burned and may increase fuel consumption. KEY-OFF during regeneration mode is not recommendable because too short operation won't finish regeneration mode, So, we recommend to users to operate until all indicator lights are turned off without Key switch OFF.

⚠Warning	▶ **Fire hazard!** During the Diesel Particulate Filter(DPF) regeneration process, the exhaust stack and fixed hood area becomes extremely hot. Park the machine outside and away from combustible or highly flammable material. Failure to comply could result in death or serious injury.

⑥ Inhibited regeneration mode

NOTICE : *Only use this mode when regeneration needs to be delayed or stopped because of an operation condition that may risk a fire hazard due to high exhaust temperatures during regeneration.*

NOTE : *Even if the DPF regeneration indicator(1) is ON during the regeneration process, the inhibited regeneration mode can be set.*

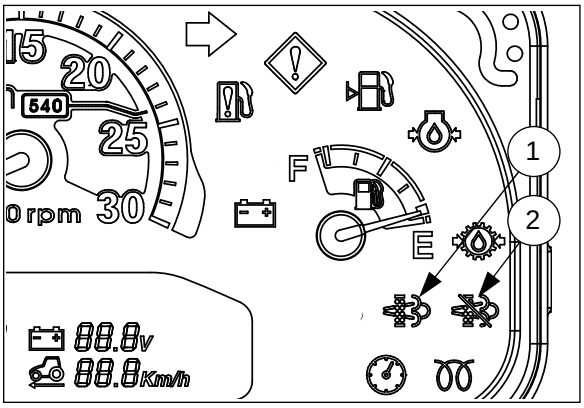

The regeneration mode can be delayed or stopped by the use of the DPF switch(3) that is located on the left-hand side of the dash.

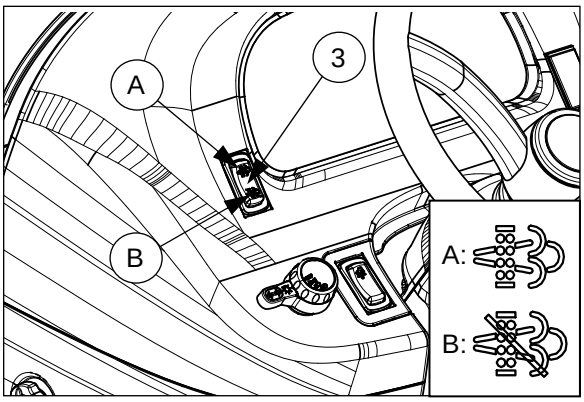

To set the inhibited regeneration mode :

1. Press down the lower side(B) of the DPF switch(3). And then DPF inhibited regeneration indicator(2) shall be turned on.

NOTICE : *When tractor arrives at a safe regeneration location, press again the lower side(B) of the DPF switch to exit the Inhibited regeneration mode.*
If not, excessive soot in the DPF may overload the emission system and result in a reduction of engine power.

To exit the Inhibited regeneration mode (To go to the regeneration mode) :

1. Press down the lower side(B) of the DPF switch(3) again for only exiting the inhibited regeneration mode.
2. Press and hold the upper side(A) of the DPF switch(3) for over one second to exit the Inhibited regeneration mode and to execute the regeneration mode.
3. When inhibited regeneration mode has been exited, the DPF inhibited regeneration indicator (4) shall be turned off.

NOTE: *If the tractor is shut off during the inhibited mode, when restarting the tractor, the regeneration system will return to the regeneration mode.*

(9) PTO switch

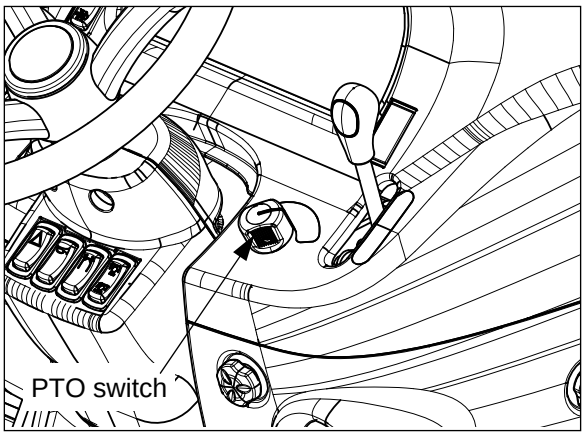

- The engine starts only when PTO switch is placed in OFF position for safety.
- After starting the engine, you must comply with the operation procedure of the PTO switch as follow.

1. Check the safety around the implement.

2. Place PTO gear lever to desired position.

3. Place PTO mode switch to "**MANUAL**" or " **AUTO**" position. (*See next contents*).

4. Turn the PTO switch to ON position to operate the PTO.

5. When the PTO is working, PTO operation indicator on the instrument panel shall be ON.

6. To stop the PTO temporarily while operating, push the PTO switch to OFF position.

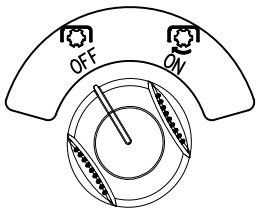

ON : PUSH AND TURN
OFF : PUSH

⚠Warning	▶ Before attaching or checking the PTO driven equipment, - Always place the PTO switch in OFF position, and PTO gear lever in NEUTRAL position. ▶ If the PTO mode switch is placed in **MANUAL** position, PTO rotates even if the implement moves up to upper limit. Pay attention to the surroundings to prevent a accident. ▶ Do not engage the PTO at high engine speed. Sudden engagement can cause damage to some implements and PTO clutch. Engage PTO at low RPM, and then raise the engine speed up.

(10) PTO mode switch (optional)

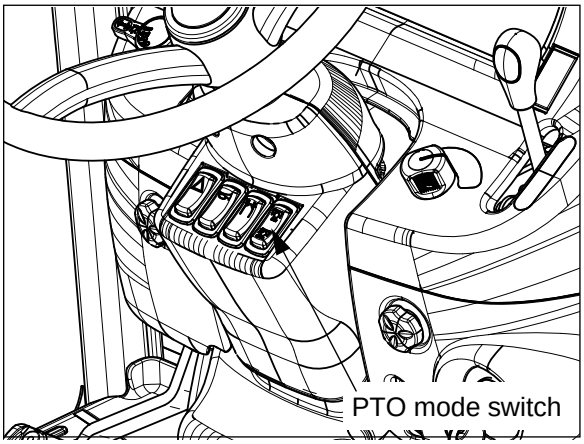

- It is used to select **AUTO** or **MANUAL** mode of PTO operation
- When the PTO mode switch is placed on ;
  - **MANUAL :** PTO shaft will rotate independent on the clutch pedal.
  - **AUTO :** If pressing clutch pedal, the PTO shaft shall be stopped.

(11) Shuttle lever (Mechanical synchro-shuttle)

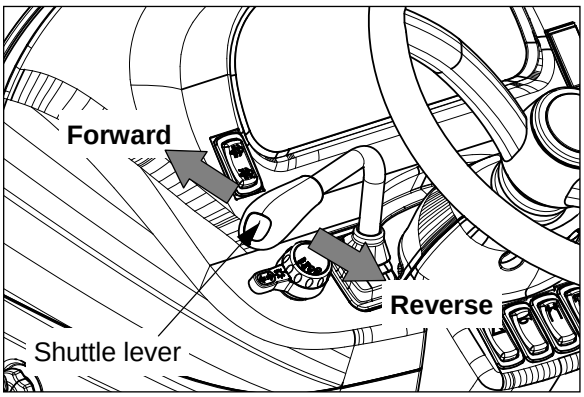

- This is used to select Forward or Reverse.
- **Forward** : Push the lever forward.
  Reverse : Pull the lever backward.
- Before reversing the tractor, lower the engine rpm and check the safety behind the tractor.

⚠ Caution	▶ The synchro-shuttle shift lever allows any forward range or reverse to be shifted while the tractor is moving slowly. However, the clutch must be disengaged and the engaged by means of clutch pedal. Make sure to depress clutch pedal fully and release it gradually to take up load smoothly, but sudden gear shifting may cause transmission damage. It is recommended to stop the tractor before operating the shuttle lever.

(12) Throttle lever

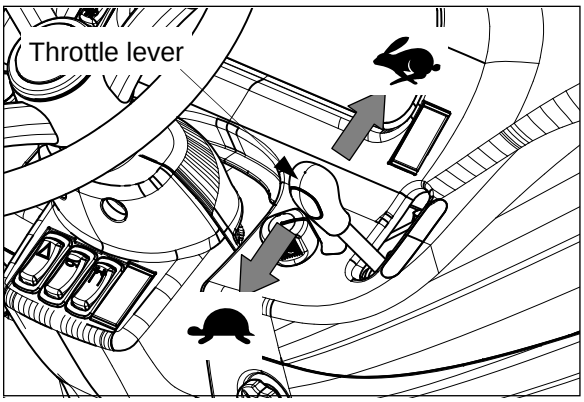

- This lever is used to control engine speed.
  - Pull it backward for **Low** speed,
  - Push it forward for **High** speed.
- The throttle lever must be used only for work field. When driving on the road, place the throttle lever to low speed, and use the throttle pedal.
- For HST model, An electronic control sensor is attached on this lever. If there is an error relating with this sensor while the engine is running, the engine speed shall be fixed to 1500 rev/min, so called LIMP HOME mode. Contact your authorized local dealer.

(13) Throttle pedal (Mechanical)

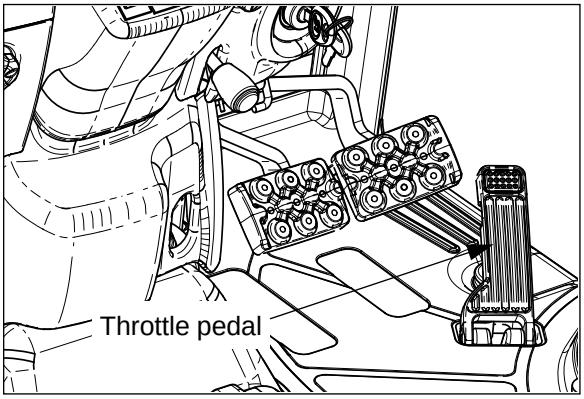

- This pedal is used to control engine speed when running on the road.
- When using the Throttle pedal, the throttle lever must be placed on **Low** speed.
- An electronic control sensor is attached on this pedal. If there is an error relating with this sensor while the engine is running, the engine speed shall be fixed to 1500 rev/min, so called LIMP HOME mode. Contact your authorized local dealer.

(14) Clutch pedal (Mechanical)

- This is used to engage or disengage the main transmission clutch for starting engine and shifting transmission gear.
- Depress the clutch pedal quickly and fully and release it slowly.
- If the PTO mode switch is placed on **MANUAL**, the PTO shaft will NOT stop, if the switch is placed on **AUTO**, the PTO shaft will stop, when pushing down on clutch pedal.

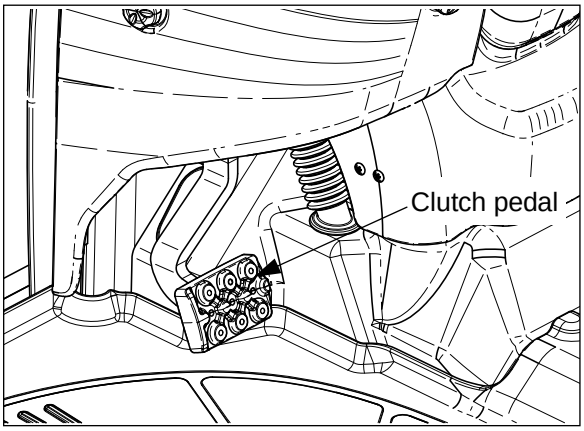

⚠ Caution	▶ DO NOT ride your foot on the clutch pedal while driving. ▶ As the start safety switch is installed for the operator's safety, if you don't press the pedal fully, it does not start.

(15) Brake pedals

- The brake pedals of your tractor can be operated independently after disconnecting the brake pedal lock pin. The left/right brake pedals transmit braking force on each wheel.
- When stopping the tractor, press both brake pedals together.
- To reduce the turning radius in the work field, remove the brake pedal lock pin, and press only the left/right pedal firmly.
- DO NOT press one-side brake pedal while differential lock is engaged. It may cause damage or failure of the axles.

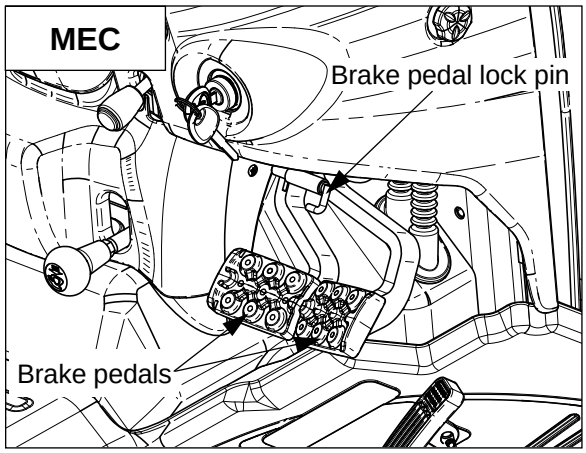

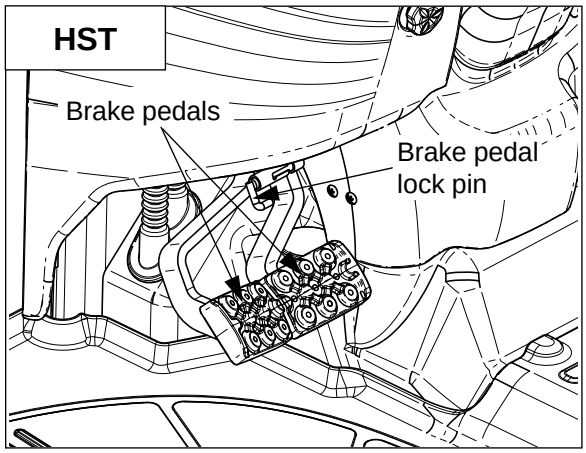

⚠ Caution	▶ When driving on the road, engage the left/right brake pedal by the lock pin. - If pressing one-side brake pedal while driving, the tractor may turnover. ▶ While driving, do not ride your foot on the brake pedals.

(16) Cruise control switch (HST type)

- This switch is used to set / release the cruise control for HST type tractor.
  - **Cruise** : Press the **upper side** of the switch while forward driving.
  - **Release** : Press the **lower side** of the switch to quit the cruise control drive.

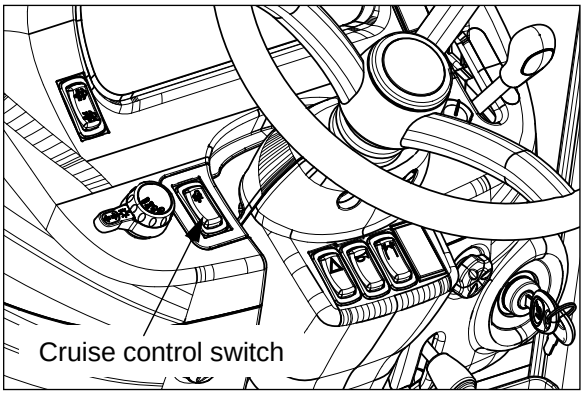

- To stop the cruise drive, press the both brake pedals or lower side of the cruise control switch. The forward pedal returns to the neutral position and the cruise drive shall be disengaged.

⚠Caution	▶DO NOT press the one-side brake during cruise driving. You have to connect the left and right brake to avoid the possible accident before driving. ▶Do not operate the cruise control switch when pressing the reverse pedal.

(17) HST forward / reverse pedal (HST type)

- Press the HST forward pedal slowly in order to move forward and if release the pedal, it returns back to the NEUTRAL position, and tractor stops.
- The HST reverse pedal is as same as the HST forward pedal operation.

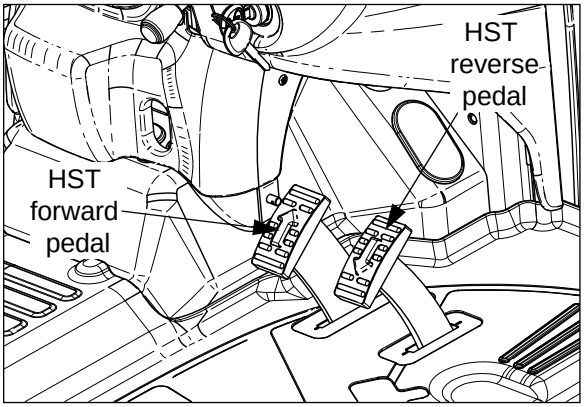

⚠warning	▶Press the brake pedal to prevent stopping distance from being extended when driving in high speed . ▶DO NOT operate the pedal hastily. It may cause a shock to you.

3-2. Right-hand controls and Cabin pillar (Cabin type)

Important to owner, read carefully

Mechanical type

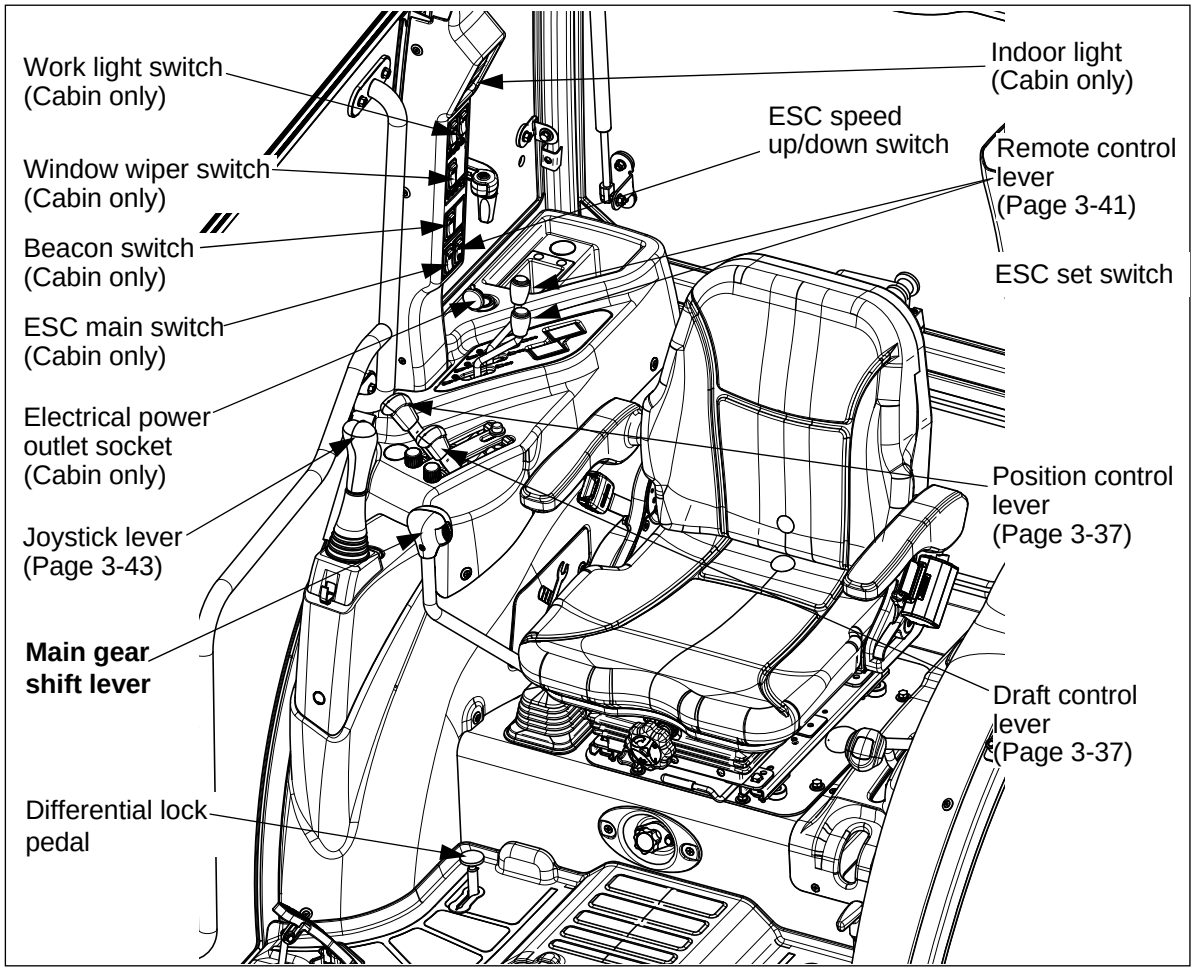

(1) Main gear shift lever (Mechanical)

- Four speed gear shift is available.
- Main gear shift lever can be shifted with just depressing clutch pedal without stopping tractor.

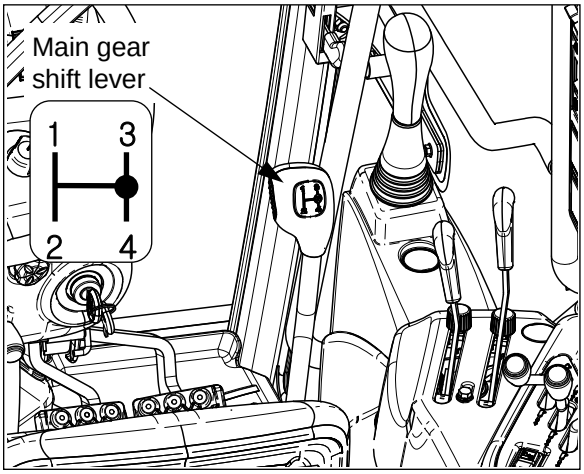

Notice	▶ Operate main gear shift lever by correct **H** pattern. If operated diagonally, it may cause a failure.

Important to owner, read carefully

HST type

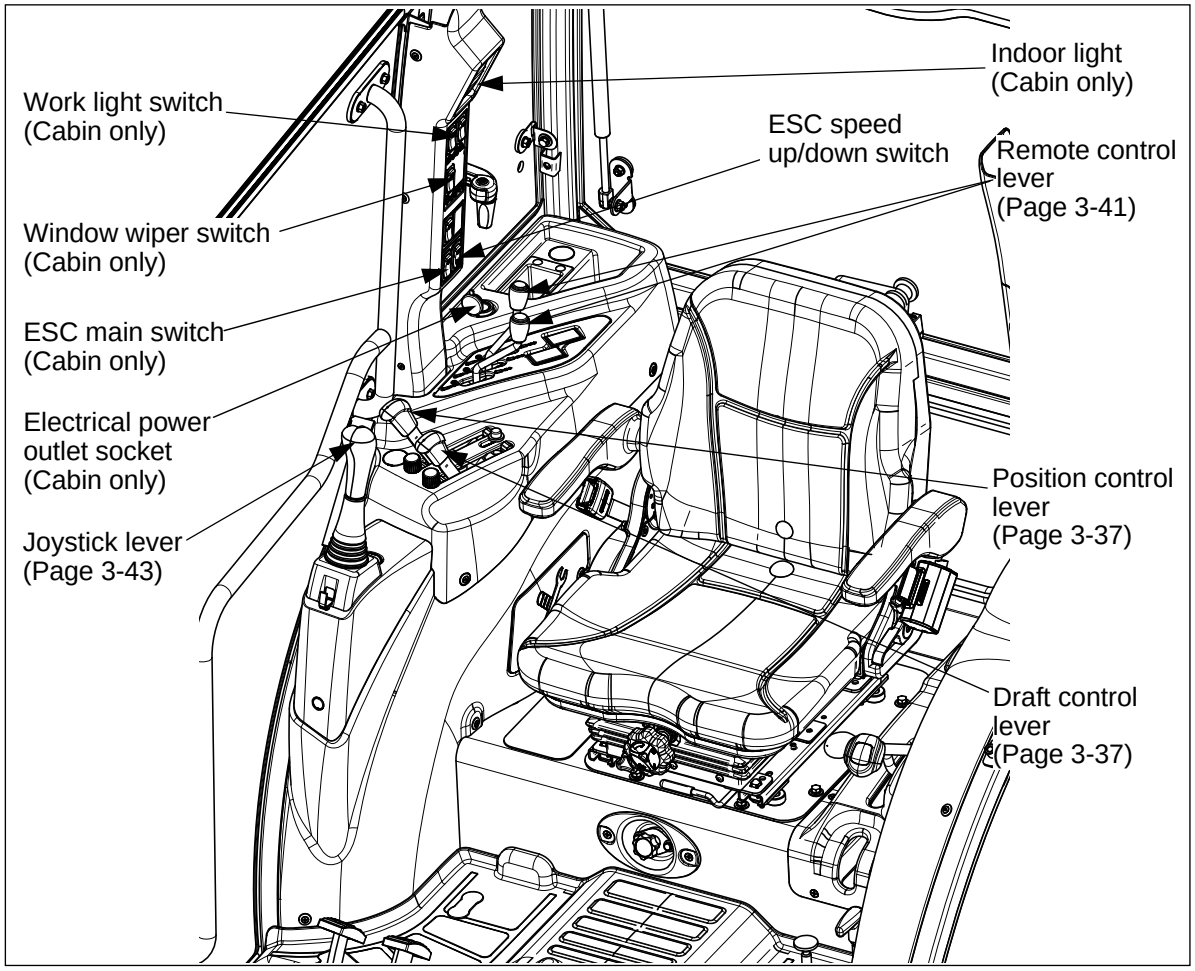

(2) Parking brake lever

- This lever is used to apply the parking brake.
- Pull it upward with pressing brake pedals.
- To disengage the parking brake, pressing the brake pedals, and push the lever downward with pressing the button of lever..

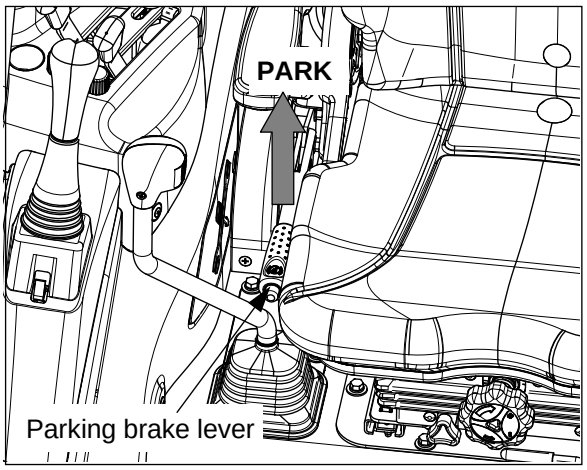

(3) Differential lock pedal

- When the rear wheel is slipping and the tractor can not move forward, stop the tractor temporarily and press the differential lock pedal.
- Differential lock is effective for working on slippery ground.
- If engaged, both rear wheels will rotate at equal speed. So, It disturbs steering operation and you cannot turn.
- Take your foot off the pedal to release the differential lock. If the traction is equalized, the lock is released automatically.
- If the differential lock does not disengaged (i.e. the turning radius is larger than normal and the turning is not smooth), depress the clutch pedal and/or press left/right one-side brake pedal slightly for a second each other.
- This pedal is installed on the step floor, but the location is ;
  - the right-hand side for mechanical model
  - the left-hand side for HST model.

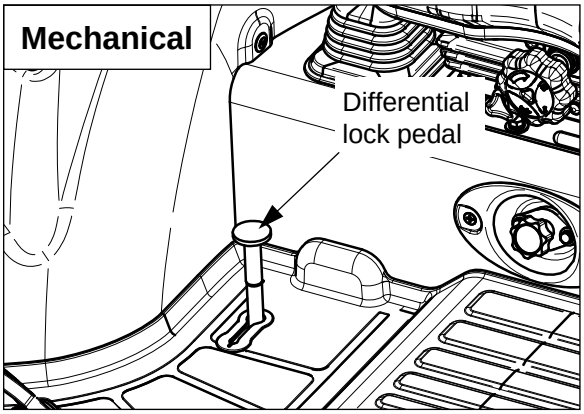

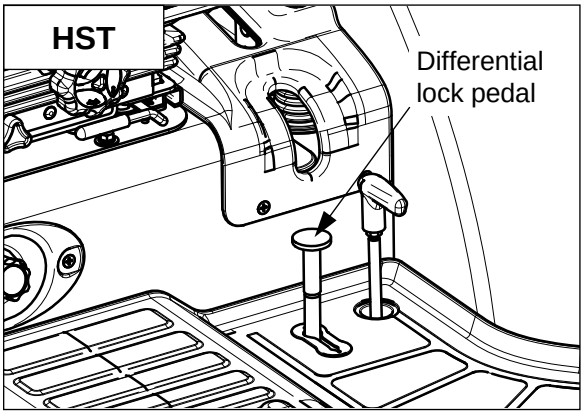

⚠ Warning	▶ Do not turn the tractor with pressing the differential lock pedal. ▶ Do not use this differential lock pedal while driving on public road. ▶ Do not engage differential lock when one wheel is spinning.

(4) Work light switch

① Front work light

- This is used to turn on the front/rear work lights.
- **ON** - Press the upper side (symbol part) of the switch.
- **OFF** - Press the lower side of the switch

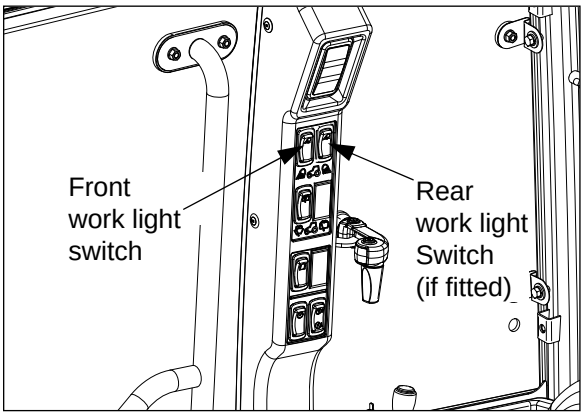

② Rear work light (if fitted)

- This is used to turn on the front/rear work lights.
- **ON** - Press the upper side (symbol part) of the switch.
- **OFF** - Press the lower side of the switch

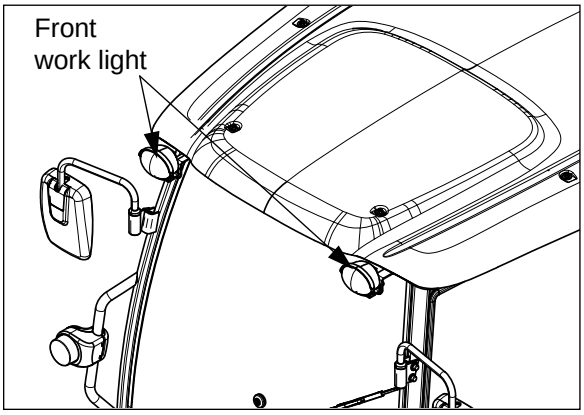

⚠ Caution	▶ When driving on the road at night, do not let the front / rear work lights stay ON. It may cause a disturbance to the driver of the following car.

(5) Window wiper switch (Front, Rear)

- This switch is used to operate the front and rear window wiper.
- Press the upper side of its switch for operating only the front/rear wiper.
- If pressing and holding the upper side of the switch again, the washer liquid shall be sprayed out.

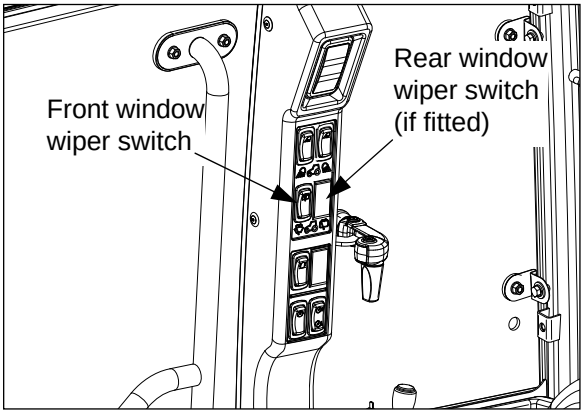

⚠ Caution	▶ Use wind shield washer liquid for automobile in winter time. ▶ Do not operate the wiper without wind shield washer liquid, it may cause damage to the wiper motor.

(6) Electrical power outlet socket

- This is used to withdraw the electric power for charging of the cigarette lighter jack or cellular phone.
- In case of using cigarette lighter jack (optional)
  -If you push the cigarette lighter jack, the heating coil generates heat and shall be used as alternative of lighter.
- In case of using as power supply (12V)
  -Use the cellular phone charger less 10A.

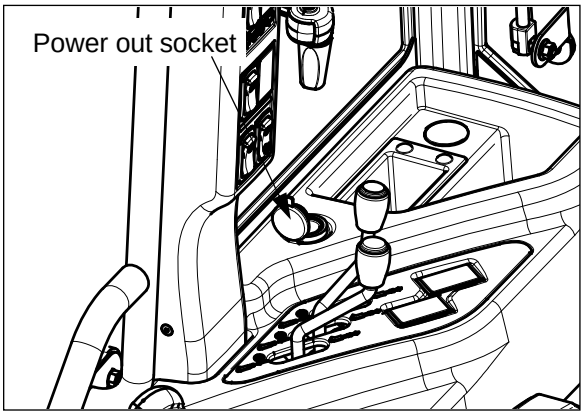

Caution	▶ When using a cigarette lighter jack, cares must be taken not to touch the heating coil. The heat generated coil is very hot and may cause the danger of a burn.

(7) Indoor light (Cabin only)

- Press the lower side of indoor light to turn on the light.
- Press the lower side of indoor light again to turn off the light.

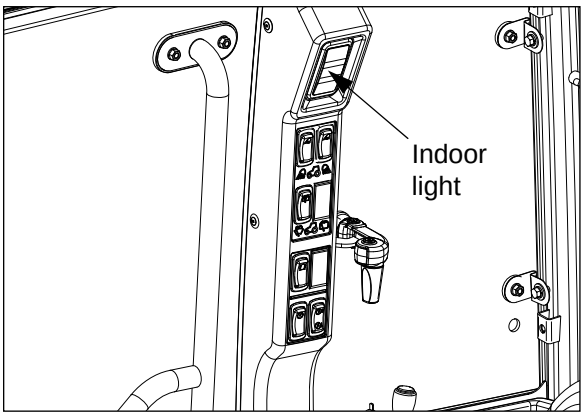

(8) Audio player (Cabin only) (if fitted)

- Refer to the attached user's manual for Audio player.

Caution	▶To ensure safe operation, Avoid turning up the player volume so loud. ▶Do not use a headset while driving tractor.

(9) ESC main switch

- This switch is used to enable Engine Speed Cruise Control(ESC) function.
- If pressing the ESC main switch from position 0 to position 1 (**Off –> Ready**),
  - ESC indicator on instrument panel shall be blinked.
  - Engine speed stored on ECU shall be displayed on LCD panel.
- If pressing the ESC main switch from position 1 to position 2 (**Ready –> Resume**),
  ① **(if pressing below 2 second)** – ESC indicator shall be ON and engine speed cruise control (ESC) shall begin.
  ② **(if pressing over 2 second)** – current engine speed shall be stored on ECU and the stored engine speed shall be blinked 3 times on LCD panel.
- To exit the ESC control,
  -. Press the lower side (“Off position”) of the ESC main switch or
  -. Press down the brake pedals.

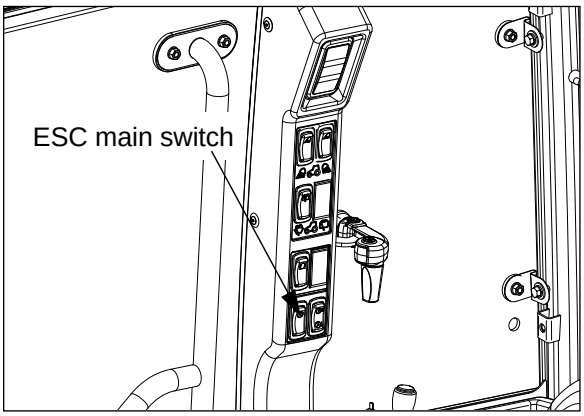

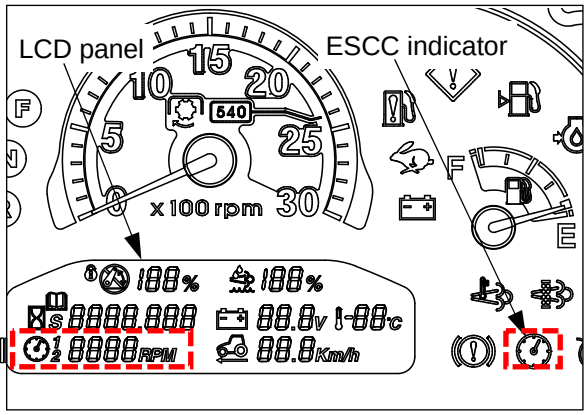

(10) ESC speed up/down switch

- This switch is used to adjust the engine speed for ESC when the ESC is working.
- If pressing the upper/lower side of the switch, the engine speed shall be ;
  - Upper side : Increased.
  - Lower side : Decreased.

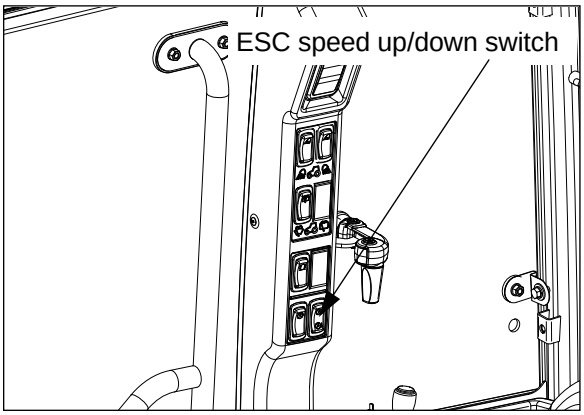

(11) Beacon lamp switch

- This switch is used to supply electric power to beacon connector installed under cabin roof.
- Beacon connector is only used for beacon lamp.
- Press the upper side of the switch when turning on the beacon lamp.

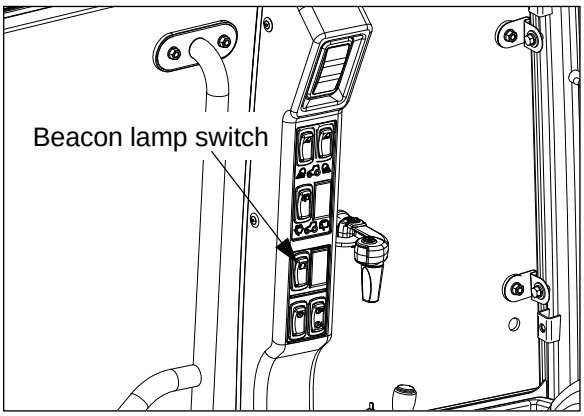

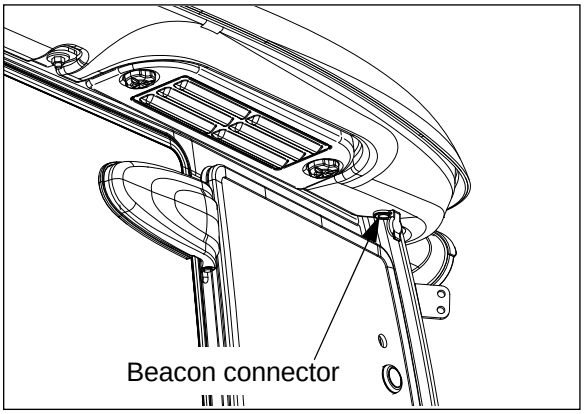

3-3. Left-hand controls (Cabin type)

Important to owner, read carefully

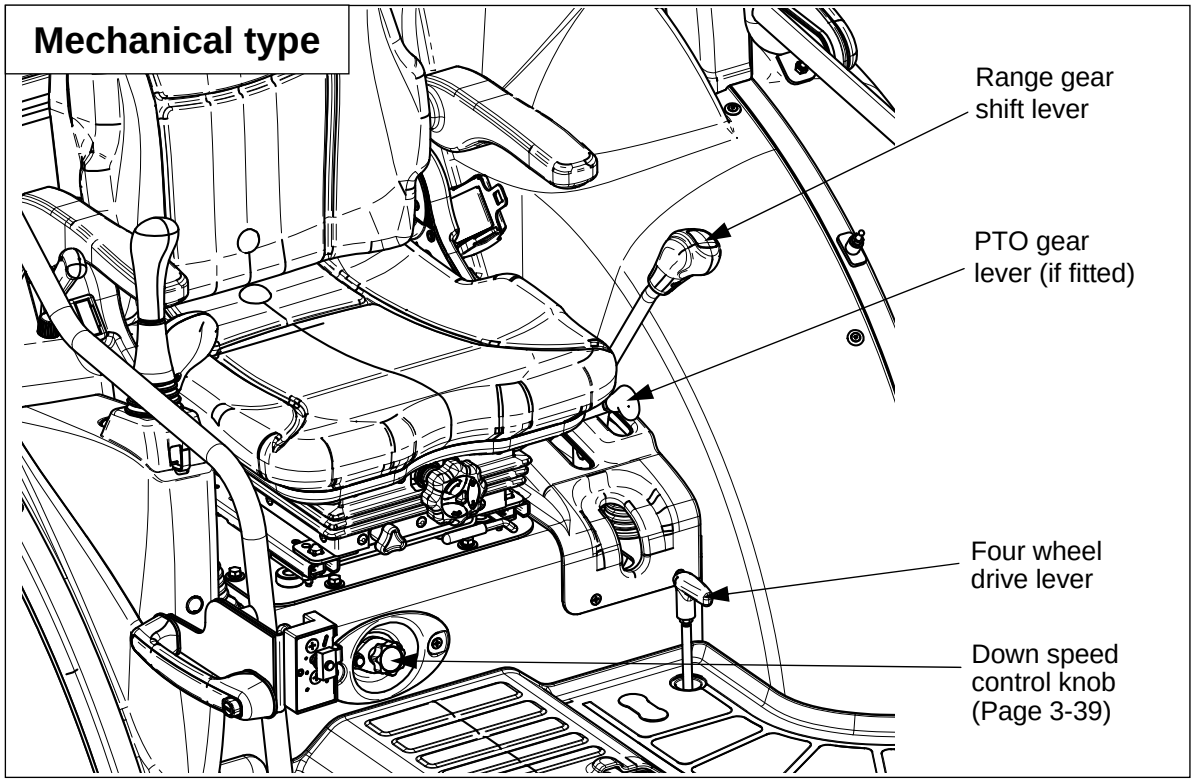

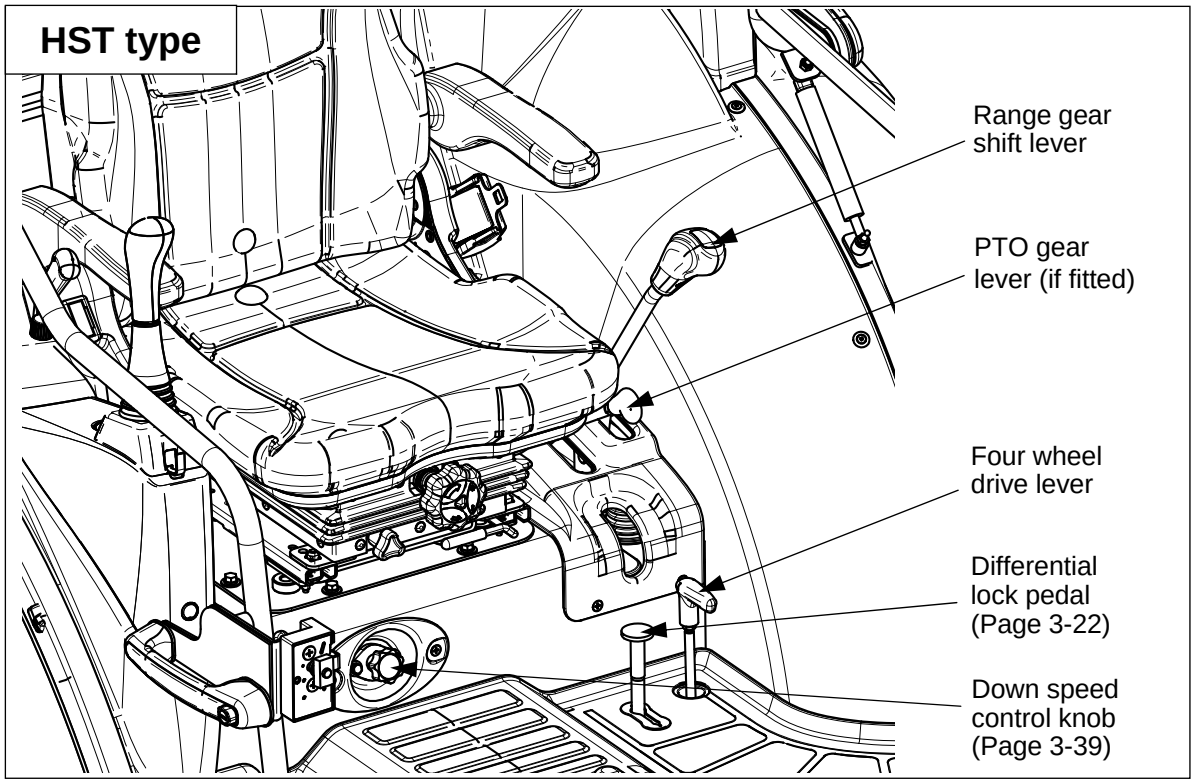

(1) Range gear shift lever

① Mechanical type

- Three speed gear shift is available.
- Before operating range gear shift lever, HAVE TO STOP the tractor completely.

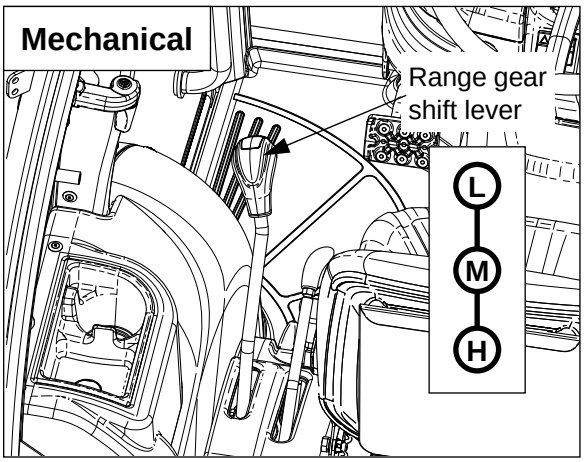

② HST type

- Three speed gear shift and NEUTRAL position is available.
- Before operating range gear shift lever, HAVE TO STOP the tractor completely.

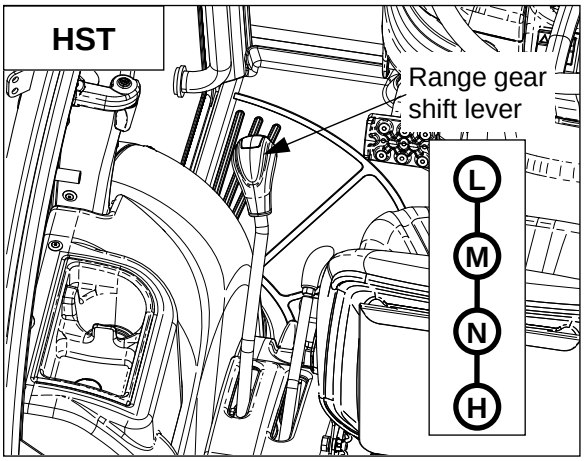

Notice	▶ Operate range gear shift lever correctly. If operated diagonally, it may cause a failure.

(2) PTO gear lever (if fitted)

- 540 / 750 / 1000 rev/min and neutral position is available.
- Before operating the lever, press the clutch pedal and put PTO switch to **OFF** position, and stop the PTO shaft completely.

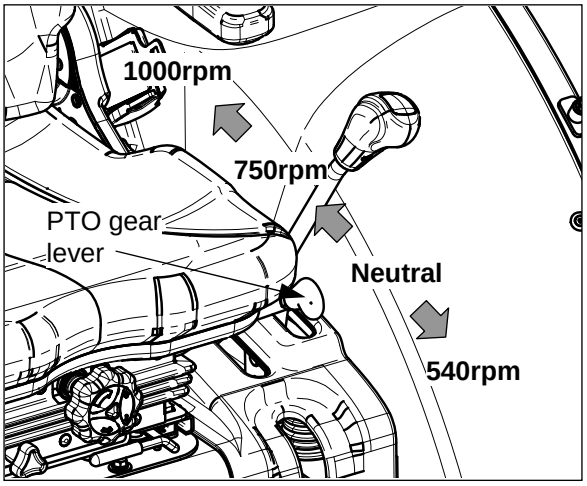

⚠ Caution	▶ If the PTO gear lever is NOT engaged smoothly, lift up and down on implement to align the drive shaft.

(3) Four wheel drive lever (4WD)

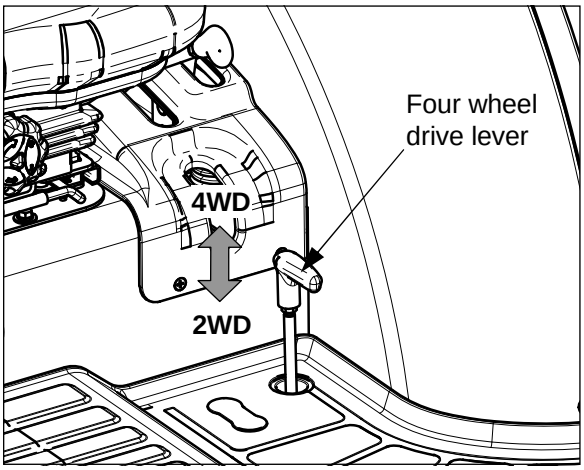

- This lever is used to engage/disengage the four wheel drive (4WD). Pull it upward for engaging 4WD.
- Before operating the 4WD lever, press the clutch pedal and stop the tractor completely.
- 4WD is very effective in the following cases.
  - When increasing the towing power for heavy work.
  - In case of working in sandy soil.
  - To prevent tractor from spinning in wet land.

(4) Middle PTO lever (if fitted)

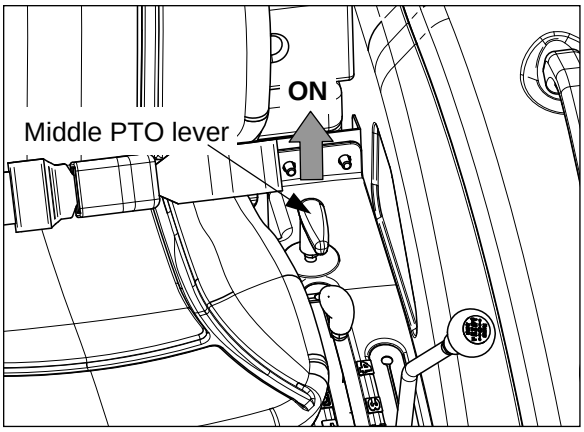

- Pull the middle PTO lever up to engage the middle PTO gear.
- The middle PTO shaft rotates counter-clock wise (CCW) when looking at middle PTO shaft end.
- Speed : 2000 rev/min when engine rotates 2563 rev/min.

3-4. Left / Right-hand controls (Roll-bar type)

Important to owner, read carefully

Mechanical type

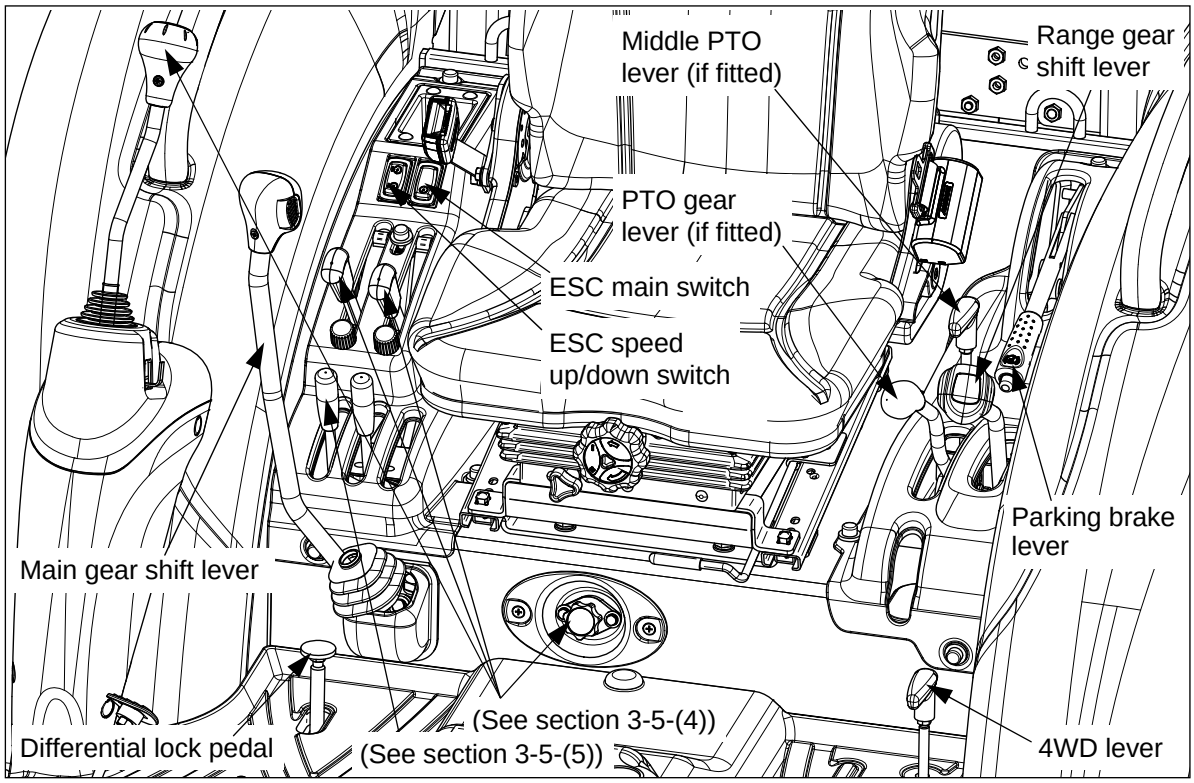

(1) Main gear shift lever (Mechanical)

- Four speed gear shift is available.
- Main gear shift lever can be shifted with just depressing clutch pedal without stopping tractor.

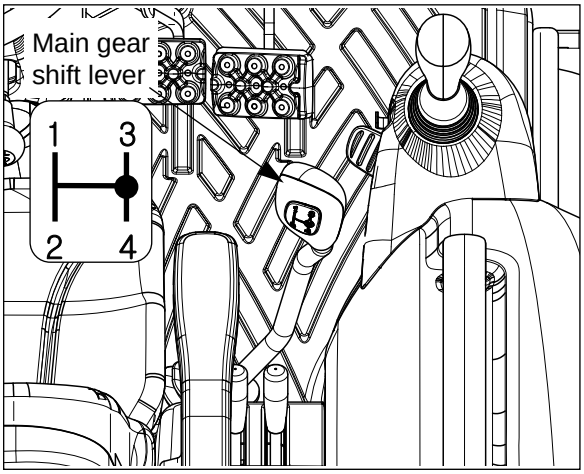

Notice	▶ Operate main gear shift lever by correct **H** pattern. If operated diagonally, it may cause a failure.

HST type

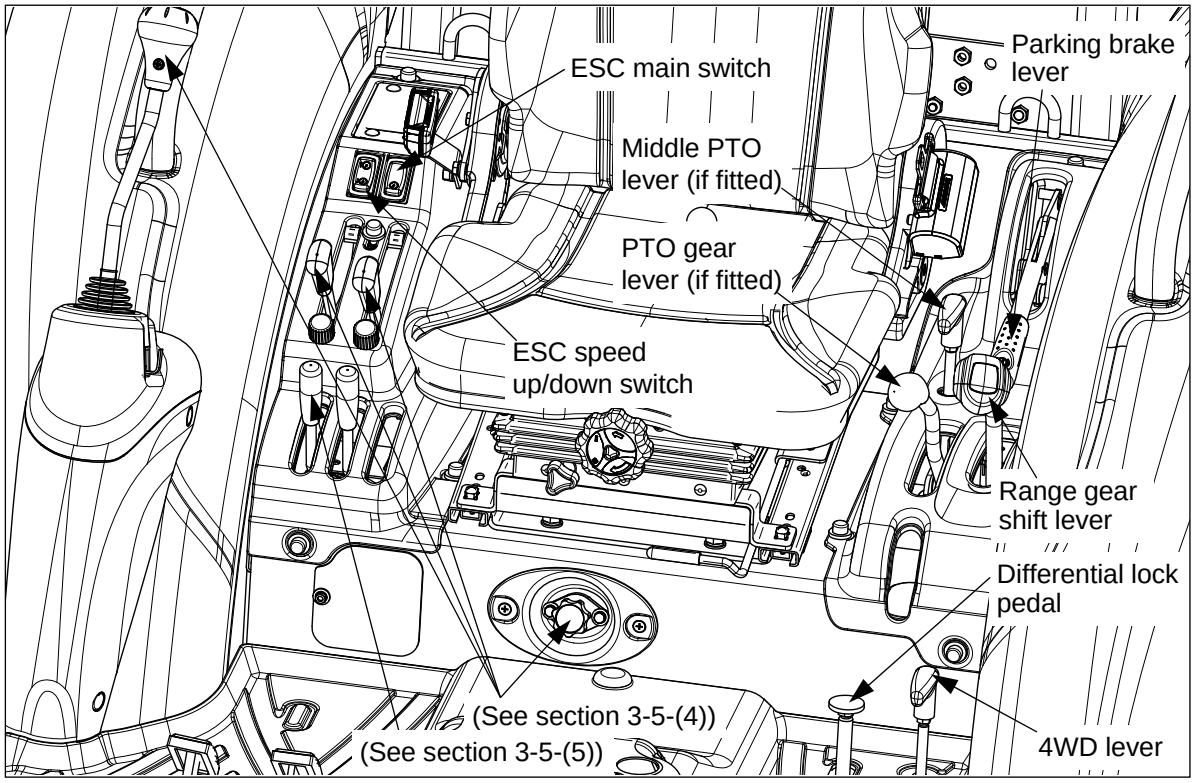

(2) Parking brake lever

- This lever is used to apply the parking brake. Pull it upward with pressing the brake pedals after locking brake pedals each other with brake pedal connecting pin.
- To disengage the parking brake, pressing the brake pedals, and push the lever downward with pressing the button of lever.

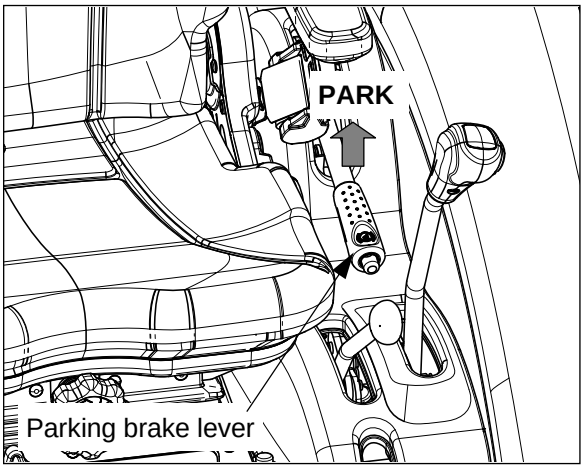

(3) Differential lock pedal

- When rear wheel is slipping and the tractor can not move forward, stop the tractor temporarily and press the differential lock pedal.
- Differential lock is effective for working on slippery ground.
- If the differential lock is engaged, both rear wheels will rotate at equal speed. So, It disturbs steering operation, and you cannot turn smoothly.
- Take your foot off the pedal to release the differential lock. If the traction is equalized, the lock is released automatically.
- If the differential lock does not disengaged (i.e. the turning radius is larger than normal and the turning is not smooth), depress the clutch pedal and/or press left/right one-side brake pedal slightly for a second each other.
- This pedal is installed on the step floor, but the location is ;
  - the right-hand side for mechanical model
  - the left-hand side for HST model.

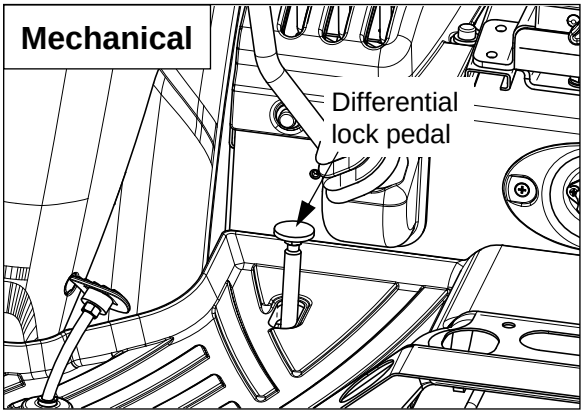

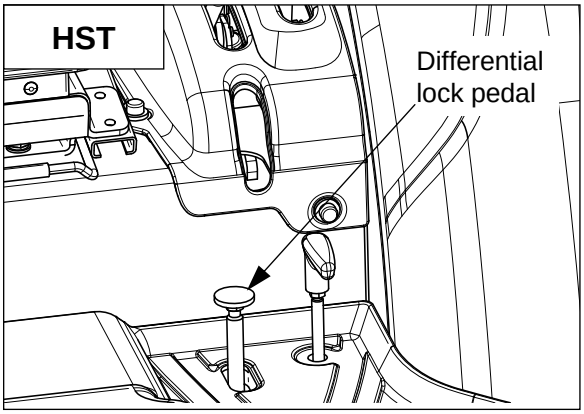

Warning	▶ Do not turn the tractor with pressing the differential lock pedal. ▶ Do not use this differential lock pedal while driving on public road. ▶ Do not engage differential lock when one wheel is spinning.

(4) Work light switch

① Rear work light

- Rear work light has a switch on its back. To turn on/off the rear work light, operate the switch as the right figure.

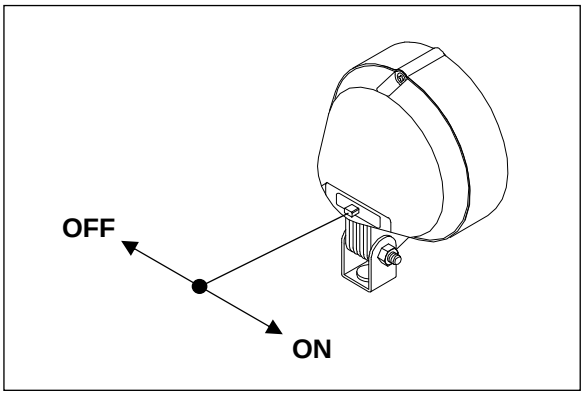

Caution	▶ When driving on the road at night, do not let the front / rear work lights stay ON. It may cause a disturbance to the driver of the following car.

(5) ESC main switch

- This switch is used to enable Engine Speed Cruise Control(ESC) function.
- If pressing the ESC main switch from position 0 to position 1 (**Off –> Ready**),
  - ESC indicator on instrument panel shall be blinked.
  - Engine speed stored on ECU shall be displayed on LCD panel.
- If pressing the ESC main switch from position 1 to position 2 (**Ready –> Resume**),
  ① **(if pressing below 2 second)** – ESC indicator shall be ON and engine speed cruise control (ESC) shall begin.
  ② **(if pressing over 2 second)** – current engine speed shall be stored on ECU and the stored engine speed shall be displayed on LCD panel.

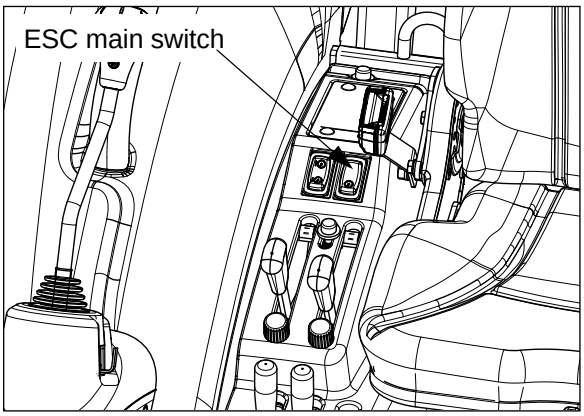

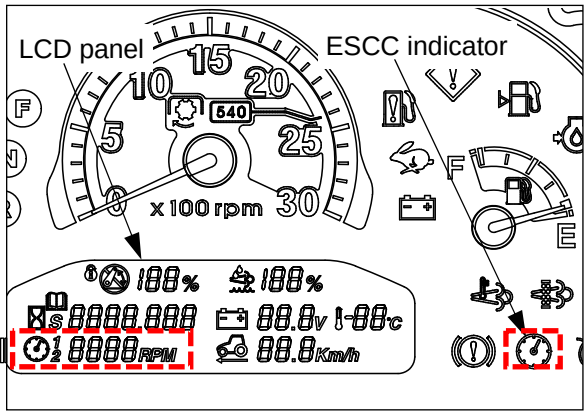

(6) ESC speed up/down switch

- This switch is used to adjust the engine speed for ESC when the ESC is working.
- If pressing the front/rear side of the switch, the engine speed shall be ;
  - Front side : Increased.
  - Rear side : Decreased.

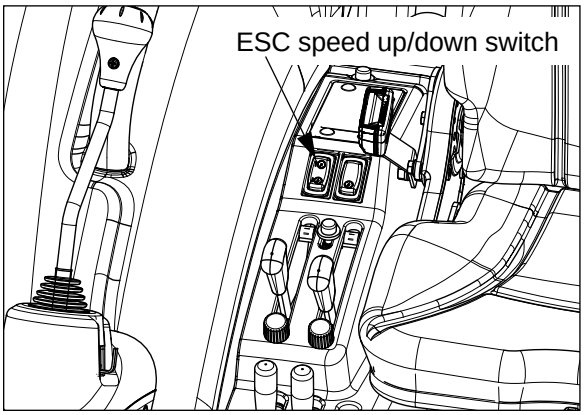

(7) Range gear shift lever

① Mechanical type

- Three speed gear shift is available.
- Before operating range gear shift lever, HAVE TO STOP the tractor completely.

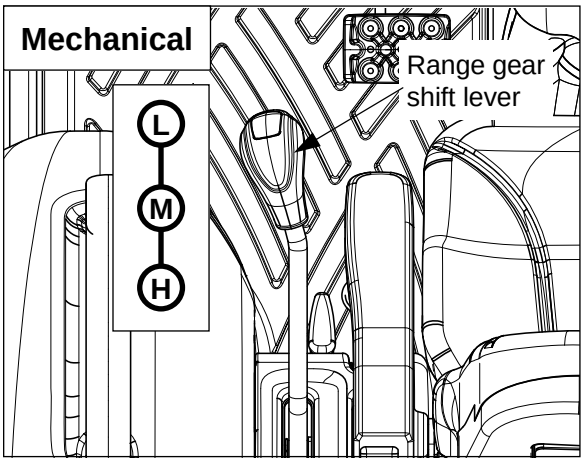

② HST type

- Three speed gear shift and NEUTRAL position is available.
- Before operating range gear shift lever, HAVE TO STOP the tractor completely.

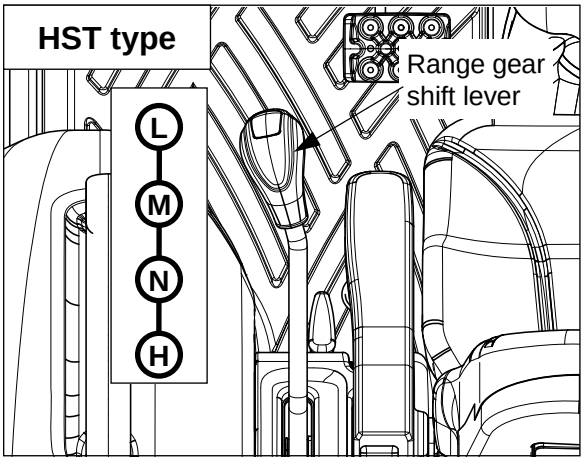

Notice	▶ Operate range gear shift lever correctly. If operated diagonally, it may cause a failure.

(8) PTO gear lever (if fitted)

- 540 / 750 / 1000 rev/min and neutral position is available.
- Before operating the lever, press the clutch pedal and put PTO switch to **OFF** position, and stop the PTO shaft completely.

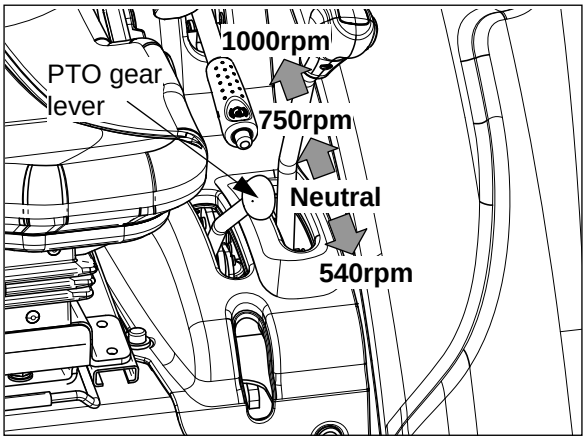

⚠ Caution	▶ If the PTO gear lever is NOT engaged smoothly, lift up and down on implement to align the drive shaft.

(9) Four wheel drive lever (4WD)

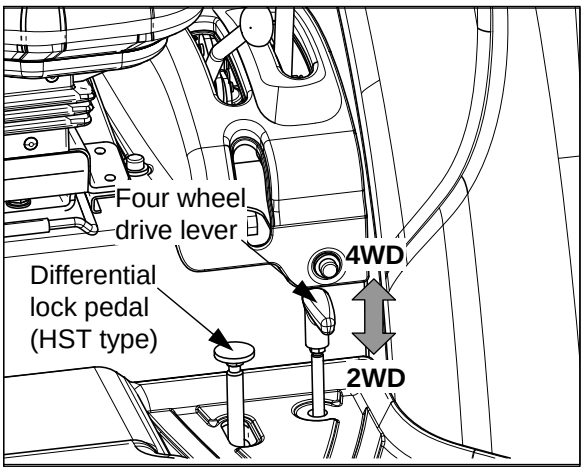

- This lever is used to engage/disengage the four wheel drive (4WD). Pull it upward for engaging 4WD.
- Before operating the 4WD lever, press the clutch pedal and stop the tractor completely.
- 4WD is very effective in the following cases.
  - When increasing the towing power for heavy work.
  - In case of working in sandy soil.
  - To prevent tractor from spinning in wet land.

(10) Middle PTO lever (if fitted)

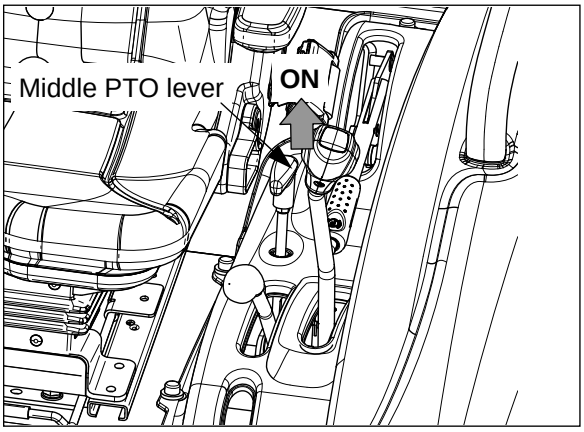

- Pull the middle PTO lever up to engage the middle PTO gear.
- The middle PTO shaft rotates counter-clock wise (CCW) when looking at the middle PTO shaft end.
- Speed : 2000 rev/min when engine rotates 2563 rev/min.

3-5. Hydraulic system

(1) Safety precautions

- Hydraulic oil leaking under pressure can penetrate the skin and cause infection or other injury. To prevent personal injury, comply with as below.
  -. Relieve all pressure before disconnecting hydraulic lines.
  -. Before applying pressure, make sure all connections are tight and components are in good condition.
  -. Never use your hand to check for suspected leaks under pressure.
  -. If injured by leaking fluid, get medical attention immediately.
- The hydraulic hoses and fittings on your tractor meet engineering specifications for the particular function. When replacing damaged parts, use only manufacture authorized service parts.
- Care in hydraulic hose installation is a must:
  -. Make sure pressure is relieved before starting installation procedure.
  -. DO NOT kink or twist a hose, failure may occur. Properly route the hose.
  -. Have a certified hydraulic technician install the hose.
  -. Remove air from the hydraulic system after installing any hydraulic component.
- Periodically check hydraulic system for leaks or damaged parts - kinked, crushed, flattened, hard blistered, heat cracked, charred, twisted, soft or loose covered hoses and fittings.
- DO NOT pull or apply external forces to the hose. The hose may fail and cause injury.
- Keep all persons away from the working area. If a hose fails, mechanisms controlled by fluid power can become hazardous. Lifted mechanisms can fall to the ground, steering system may fail, etc.
- Stay clear of a pressurized hose assembly that has blown apart. Hose fittings can be thrown off at high speed and a loose hose can whip around with great force.
- Hydraulic oil can reach high temperatures. Allow fluid to cool before servicing the system.
- Vibration can reduce hose service life. Make sure all retaining clamps and/or devices are secured.
- Environmental conditions can cause hose and fittings to deteriorate. Inspect hydraulic hoses periodically. Replace worn or damaged hoses and fittings.
- Before checking or repairing the hydraulic system, make sure the engine is stopped, and all the transmission gears are in neutral, and lower the implements to the ground.

Warning	▶ Before removing hydraulic pipes or hoses and other parts, make sure to check that hydraulic pressure is relieved completely. The leaks of pressurized oil can cause a fatal physical injury. ▶ Use proper protection equipments, before servicing hydraulic system. ▶ Before connecting or disconnecting the hydraulic quick coupler, lower the implements to the ground, and check that hydraulic pressure is relieved.

(2) Steering system

- The hydraulic steering system controlled by fluid power provides you more convenience to operate the steering wheel.
- Notices when using the steering system.

1. If there is too much of a load in front loader bucket, it could be difficult to operate the steering wheel. In this case, reduce the size of the load.
2. After turning the steering wheel fully, do not turn the steering wheel to the same direction again. As the unnecessary force is applied, this could damage to the steering system. Especially, DO NOT operate the steering wheel by force if the front wheel mired in the ditch. In this case, the rim could be affected and damaged.
3. If it sounds abnormal when operating the steering wheel, this means that there is some air in the steering components and line. In this case, turn the steering wheel to the left and right fully and hold it for about 5 seconds, and the air should bleed out and if abnormal noise does not stop. If it's not cleared, contact your authorized dealer for repair.
4. When starting engine in cold weather, a abnormal noise may occur. In this case, warm up the tractor before using to reduce the oil viscosity.
5. If you use the tractor for a long time while turning the steering wheel fully, the oil temperature will increase which may cause the reduction of the product life or the failure of hydraulic and steering system.

Notice	▶ If the engine stops, the operation of steering wheel becomes hard to turn and causes steering not to work. But this does not mean a failure. ▶ If you turn the steering wheel while driving, the steering wheel does not return back automatically.

(3) Hydraulic lift Control (Mechanical Hydraulic Lift, MHL) (Cab type)

- The hydraulic lift system is operated by the position control and draft control lever.

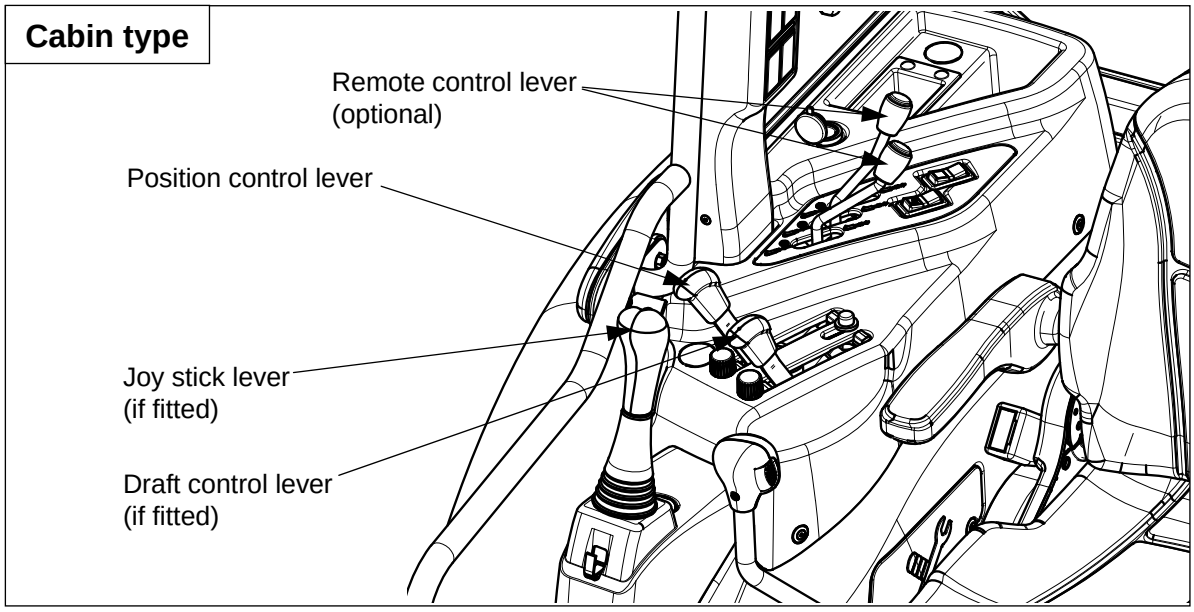

① Position control

- To set the position (height) of the rear implement, move the position control lever up/down during the engine is running. Generally, this lever is used for tiller, fertilizer distributor, mower, rake and other rear implements.

1.Push the position control lever forward and let the implement down by its own weight.

2.Move up the lever to desired position, the rear implement shell be located on the position corresponding to the lever position.

3.To set the lowest position of the lever, Turn stopper A counter-clockwise, move and lock the stopper A at desired position.

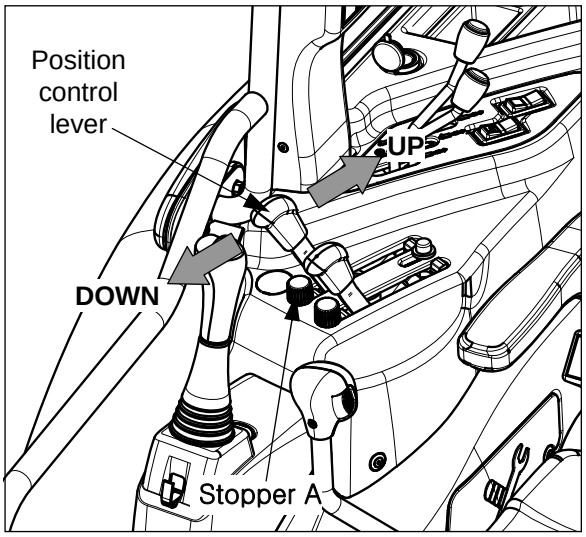

② Draft control (optional)

- The working depth of the implement under the draft control is controlled automatically by the draft load of the implement that detected from draft load sensor bracket and transmitted to the lift control valve. Generally, this mode is used for the implement which receives the draft load.
  In this case, operate the lever as follows.

1.Remove the draft sensor stopper of upper link bracket.

2.Move the position control lever forward fully (Down) and let the implement down by its own weight.

3.The draft load to lift control valve shall be determined according to the position of draft control lever.
  That is, the more the lever moves back (up), the more the implement rises up by light draft load.

4.If you want to lift the rear implement, use the position control lever instead of the draft control lever

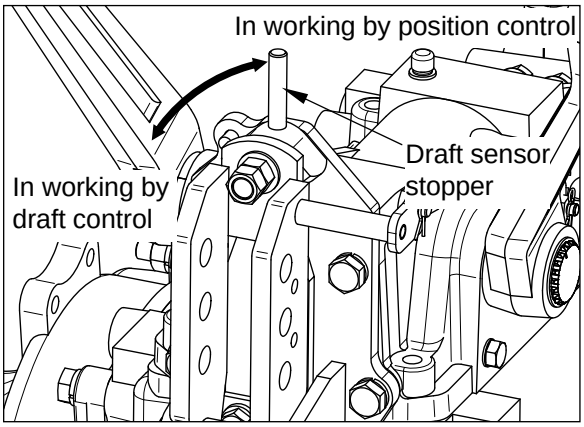

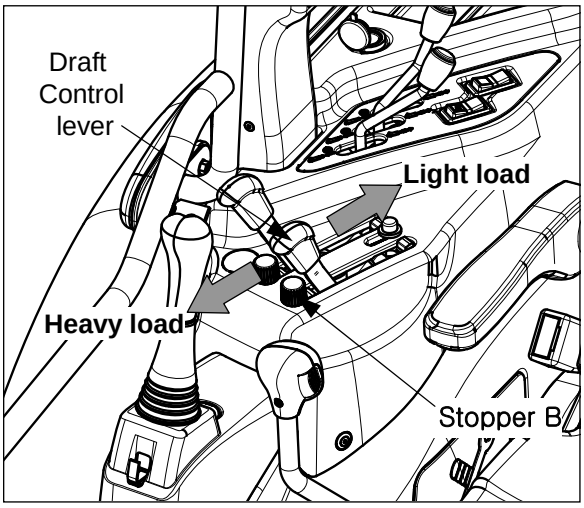

③ Mixed control

- If using above two levers in combination, mixed control is available. Set the position of the implement first, and set the draft control lever depending on the draft load. At this time, working depth can be controlled by draft control lever under position control.

④ Down speed control knob

- Turn the valve knob to the right to lower the implement slowly and to the left to rise speed faster. If turning right fully, the implement shall be fixed and even if lowering down the position control lever, the implement does not let down.
- Tiller work : Slow in down speed
- plough work : Fast in down speed
- When working in hard ground, slow down the down speed to avoid the bounding of the implements.

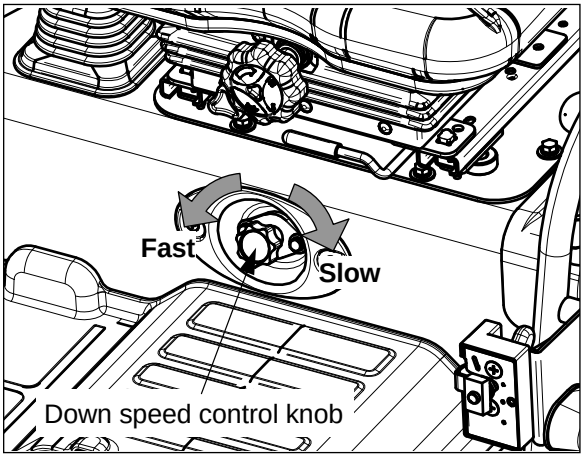

⚠ Warning	▶ When running on the road, turn right the down speed control knob slightly to lock. ▶ When changing the blades of tiller or removing grass, stop the engine and turn the down speed control knob to right slightly to lock.

(4) Hydraulic lift Control (Mechanical Hydraulic Lift, MHL) (Roll-bar type)

- The hydraulic lift system is operated by the position control and draft control lever.

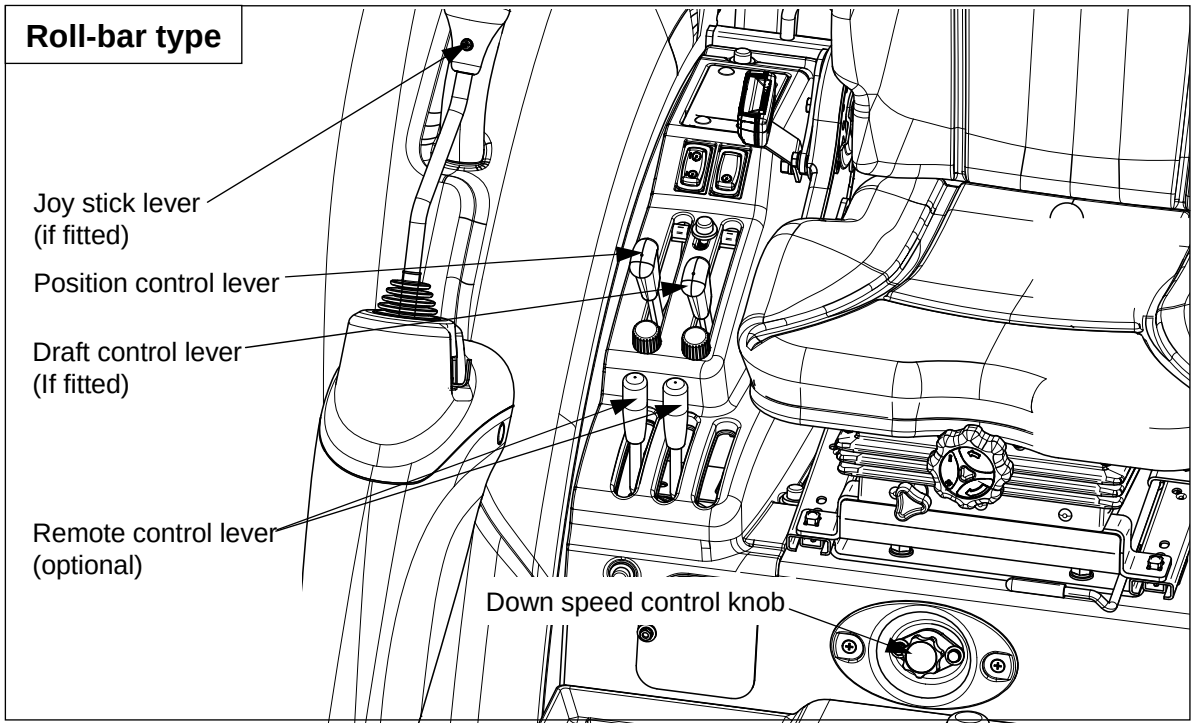

① Position control

- To set the position (height) of the rear implement, move the position control lever up/down during the engine is running. Generally, this lever is used for tiller, fertilizer distributor, mower, rake and other rear implements.

1.Push the position control lever forward and let the implement down by its own weight.

2.Move up the lever to desired position, the rear implement shell be located on the position corresponding to the lever position.

3.To set the lowest position of the lever, Turn stopper A counter-clockwise, move and lock the stopper A at desired position.

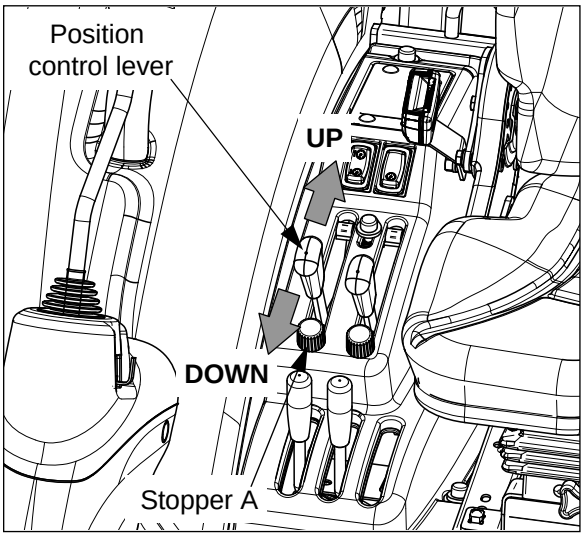

② Draft control (optional)

- The working depth of the implement under the draft control is controlled automatically by the draft load of the implement that detected from draft load sensor bracket and transmitted to the lift control valve. Generally, this mode is used for the implement which receives the draft load.
  In this case, operate the lever as follows.

1.Remove the draft sensor stopper of upper link bracket.

2.Move the position control lever forward fully (Down) and let the implement down by its own weight.

3.The draft load to lift control valve shall be determined according to the position of draft control lever.
  That is, the more the lever moves back (up), the more the implement rises up by light draft load.

4.If you want to lift the rear implement, use the position control lever instead of the draft control lever

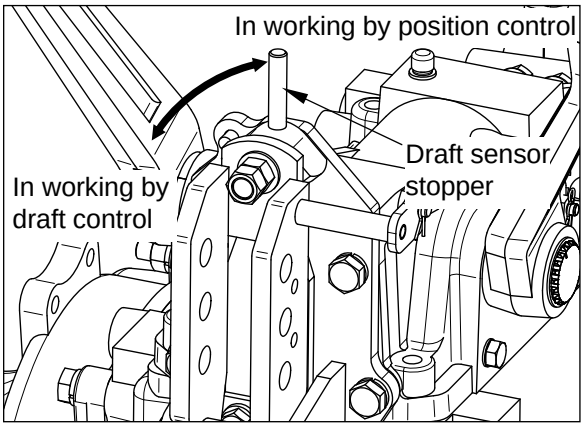

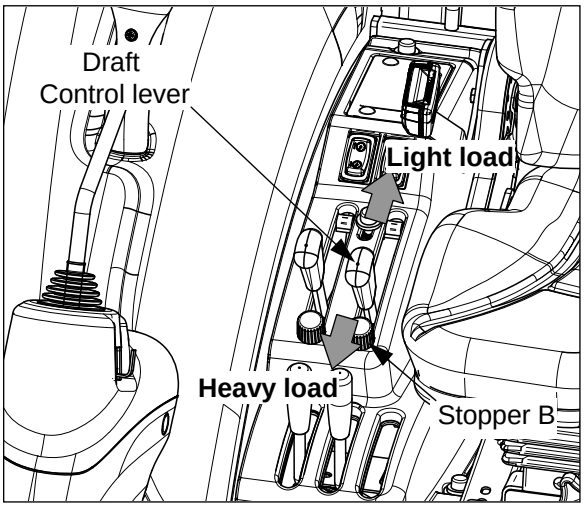

③ Mixed control

- If using above two levers in combination, mixed control is available. Set the position of the implement first, and set the draft control lever depending on the draft load. At this time, working depth can be controlled by draft control lever under position control.

④ Down speed control knob (Roll-bar type)

- Turn the valve knob to the right to lower the implement slowly and to the left to rise speed faster. If turning right fully, the implement shall be fixed and even if lowering down the position control lever, the implement does not let down.
- Tiller work : Slow in down speed
- plough work : Fast in down speed
- When working in hard ground, slow down the down speed to avoid the bounding of the implements.

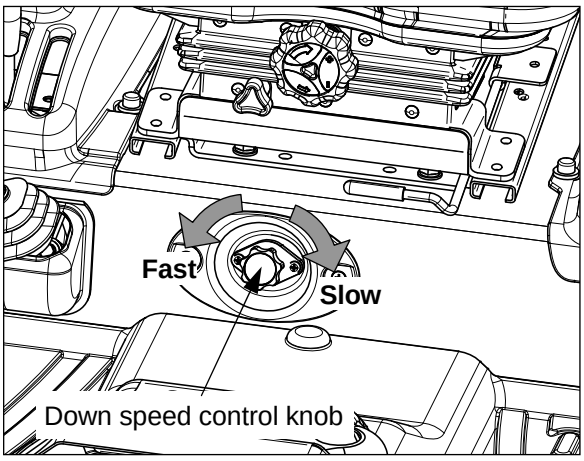

Warning	▶ When running on the road, turn right the down speed control knob slightly to lock. ▶ When changing the blades of tiller or removing grass, stop the engine and turn the down speed control knob to right slightly to lock.

(5) Remote control lever and Quick coupler (optional)

① Cabin type

- These levers are used to operate the hydraulic cylinder and/or motor of the implement attached to the tractor.
- **Push** the remote control lever forward, and the hydraulic pressure can be delivered **to the left-hand coupler** of the related lever and right-hand coupler shall be connected to the drain.
- Each lever of the remote control valve can be operated respectively, and when operating the levers at the same time, the one received less pressure begins to start first.
- After connecting and preliminary operating the hydraulic equipment, check again transmission oil level of the tractor.

Cabin type

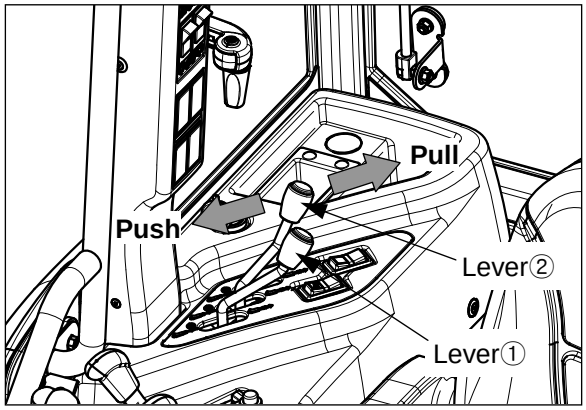

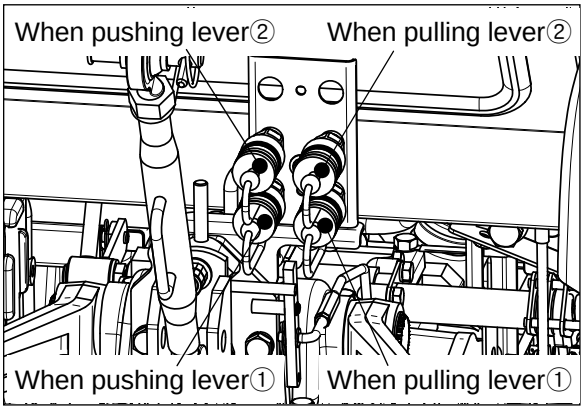

② Roll-bar type

- These levers are used to operate the hydraulic cylinder and/or motor of the implement attached to the tractor.
- **Pull** the remote control lever **backward**, and the hydraulic pressure can be delivered **to the upper coupler** of the related lever and **lower coupler** shall be connected **to the drain**.
- Each lever of the remote control valve can be operated respectively, and when operating the levers at the same time, the one received less pressure begins to start first.
- After connecting and preliminary operating the hydraulic equipment, check again transmission oil level of the tractor.

Roll-bar type

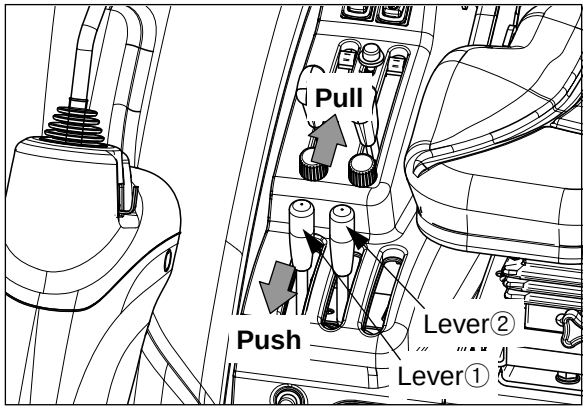

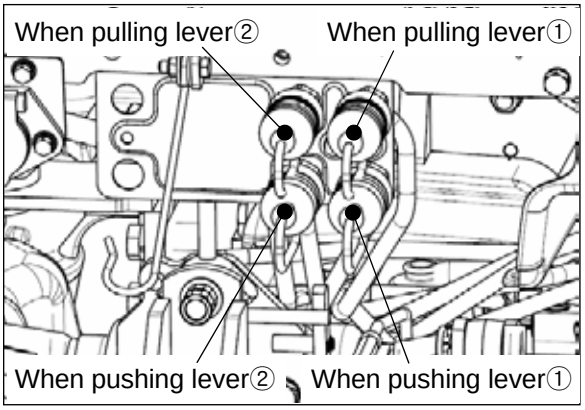

(6) Joystick lever (if fitted)

※ Remote joystick lever helps to operate front loader comfortably.

- When connecting hydraulic hoses, follow the instruction below.
  - ► loader down - opening ①
  - ► loader up - opening ②
  - ► bucket up - opening ③
  - ► bucket dump - opening ④

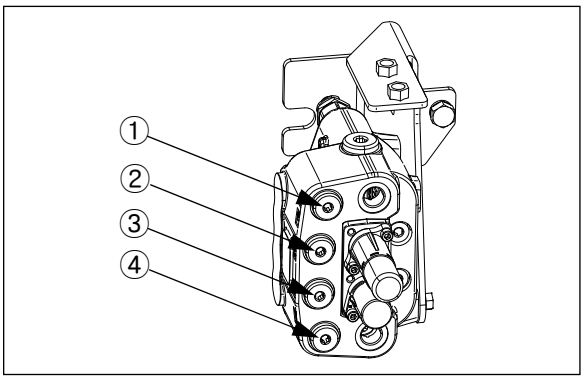

- The standard of hydraulic opening is PS3/8”.
- Use the adapter for hydraulic connection.
- Joystick can be operated at 4 directions as shown in the right figure.
  If you move joystick diagonally, loader and bucket shall be operated at the same time. Then, small loads move first.
  When you want to float bucket, lower the loader and push forward the lever at floating position.
  After finishing work, pull the lever and place it in neutral position.

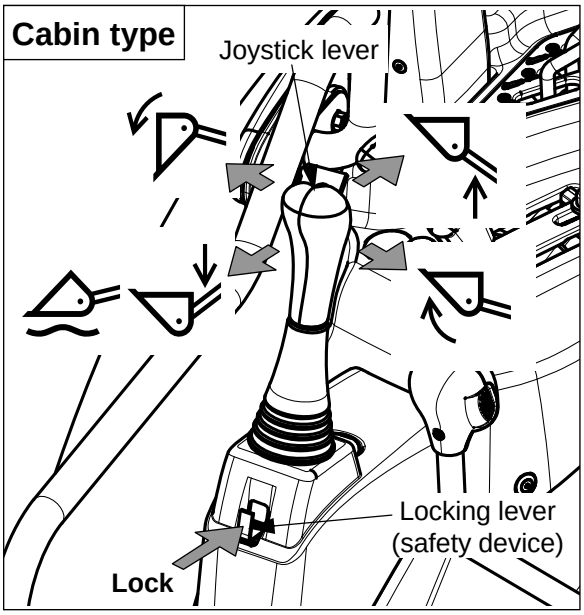

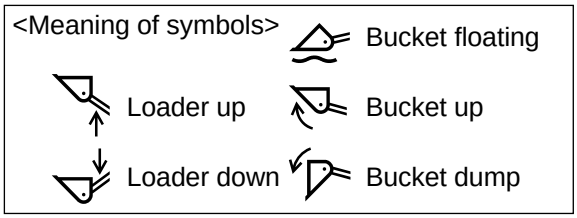

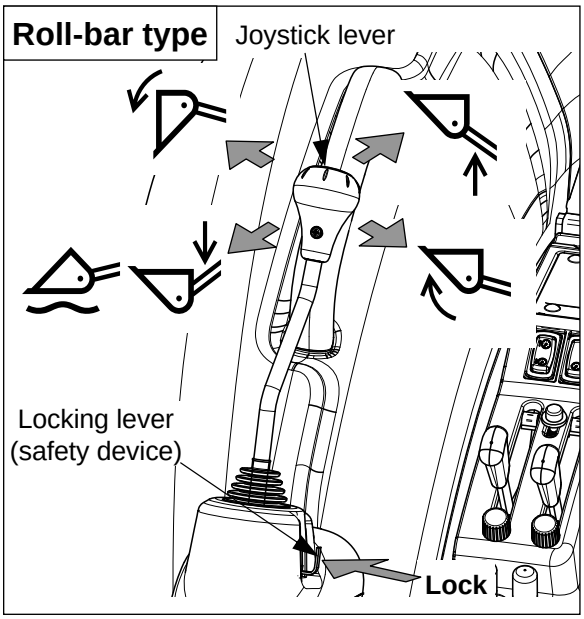

- Locking lever shown in the right figure is used to lock the joystick lever.
  - Pull from the joystick : Unlock
  - Push to the joystick : Lock
- *For further information, See section 4-4 in this manual.*

Warning	▶ To prevent accidents, push and lock the locking lever when you do not use joystick lever.