2026 LEAF®

OWNER'S MANUAL
and MAINTENANCE INFORMATION

For your safety, read carefully and keep in this vehicle.

OWNER'S MANUAL SUPPLEMENT

The information contained within this supplement revises or adds to the "Instruments and controls" and "Starting and Driving" section of the 2026 NISSAN Leaf Owner's Manual.

Read carefully and keep in the vehicle.

Printing: July 2025

Publication No. SU26E0 0ZE2U0

PROPILOT ASSIST SYSTEM STATUS INDICATOR

This indicator appears when the following systems are turned on:

- ProPILOT Assist

See “ProPILOT Assist Systems”.

LANE DEPARTURE WARNING (LDW)

HOW TO ENABLE/DISABLE THE LDW SYSTEM

Setting Lane Sensitivity

You can set lane sensitivity using the “Settings” menu in the vehicle information display.

1. Push the ◀ ▶ button until "Settings" appears in the vehicle information display and then push the scroll dial. Use the scroll dial to select "Driver Assistance." Then push the scroll dial.
2. Select "Lane Assist" and push the scroll dial.
3. Select "Lane Sensitivity".

- Strong
- Normal
- Mild

NOTE:

The sensitivity setting will be retained even if the EV system is restarted. This setting is also applied to the Intelligent Lane Intervention (I-LI) system.

INTELLIGENT LANE INTERVENTION (I-LI)

BASIC INFORMATION

⚠ WARNING

Failure to follow the warnings and instructions for proper use of the I-LI system could result in serious injury or death.

- **The I-LI system will not steer the vehicle or prevent loss of control. It is the driver’s responsibility to stay alert, drive safely, keep the vehicle in the traveling lane, and be in control of the vehicle at all times.**
- **The I-LI system is primarily intended for use on well-developed freeways or highways. It may not detect the lane markers in certain road, weather, or driving conditions.**

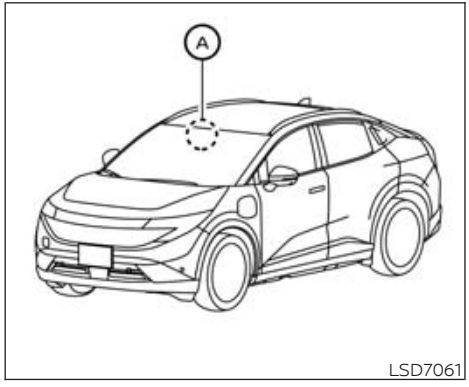

The I-LI system will operate when the vehicle is driven at speeds of approximately 37 – 125 MPH (60 – 200 km/h), and only when the lane markings and road edges are clearly visible on the road. The I-LI system warns the driver when the vehicle has left the center of the traveling lane with an indicator and steering wheel vibration. The system helps assist the driver to return the vehicle to the center of the traveling lane.

The I-LI system monitors the lane markers on the traveling lane using the camera unit Ⓐ located above the inside mirror.

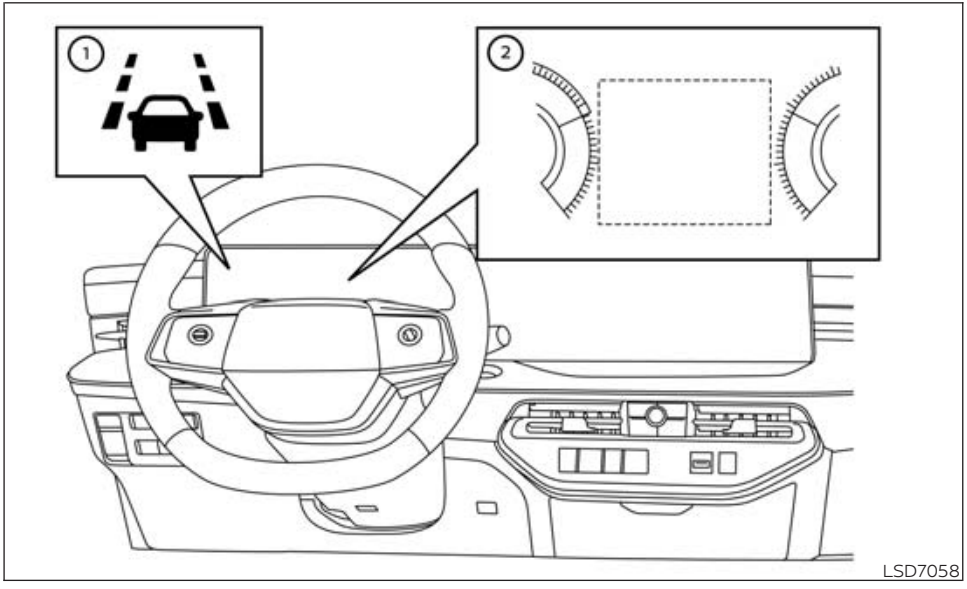

Example

① I-LI indicator (on the vehicle information display)

② Vehicle information display

INTELLIGENT BLIND SPOT INTERVENTION (I-BSI)

BASIC INFORMATION

⚠ WARNING

Failure to follow the warnings and instructions for proper use of the I-BSI system could result in serious injury or death.

- **The I-BSI system is not a replacement for proper driving procedures and is not designed to prevent contact with vehicles or objects. When changing lanes, always use the side and rear mirrors and turn and look in the direction your vehicle will move to ensure it is safe to change lanes. Never rely solely on the I-BSI system.**
- **There is a limitation to the detection capability of the radar. Not every moving object or vehicle will be detected. Using the I-BSI system under some road, ground, lane marker, traffic or weather conditions could lead to improper system operation. Always rely on your own operation to avoid accidents.**

The I-BSI system helps alert the driver of other vehicles in adjacent lanes when changing lanes, and helps assist the driver to return the vehicle to the center of the traveling lane.

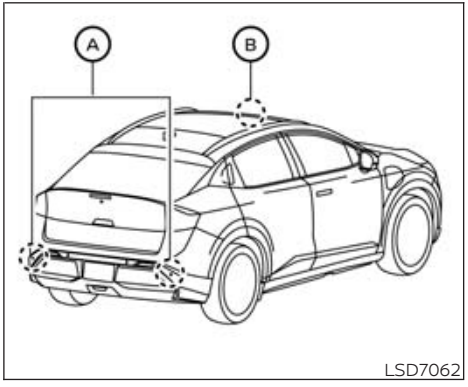

The I-BSI system uses radar sensors Ⓐ installed near the rear bumper to detect other vehicles in an adjacent lane. In addition to the radar sensors, the I-BSI system uses a camera Ⓑ installed behind the windshield to monitor the lane markers of your traveling lane.

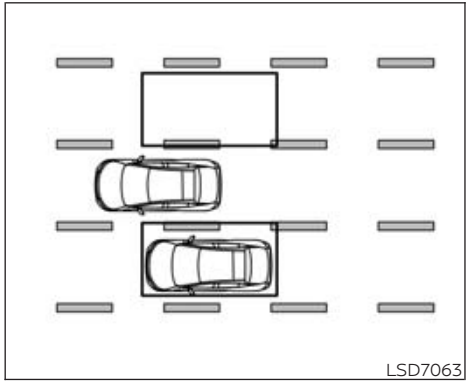

The radar sensors can detect vehicles on either side of your vehicle within the detection zone shown as illustrated.

This detection zone starts from the outside mirror of your vehicle and extends approximately 10 ft (3.0 m) behind the rear bumper, and approximately 10 ft (3.0 m) sideways.

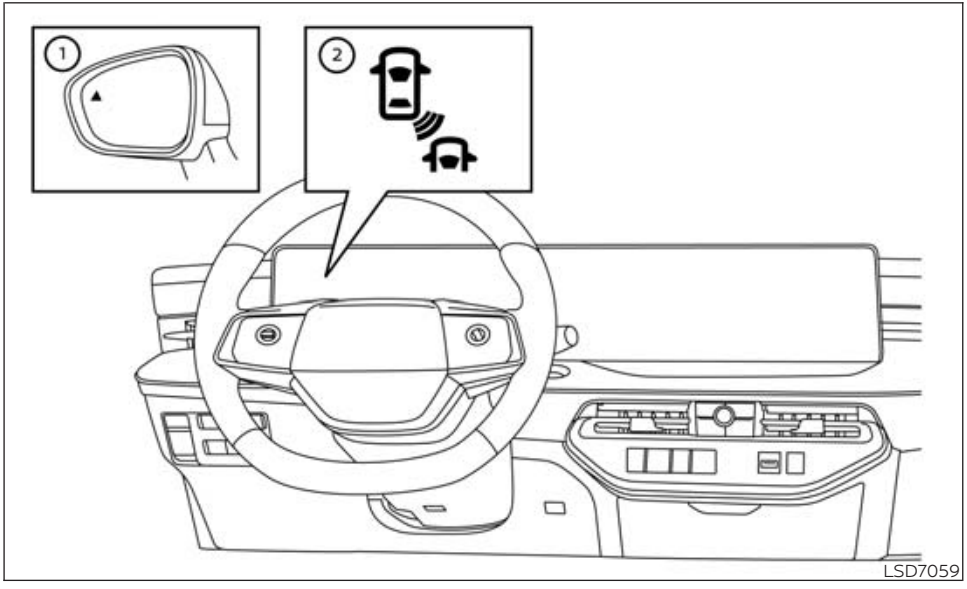

Example

① Side indicator light

② I-BSI indicator (on the vehicle information display)

PROPILOT ASSIST SYSTEMS OVERVIEW

Basic information

Each ProPILOT Assist feature is designed to help the driver in different ways as they drive.

Here is a summary of these features. See the specified page for detailed information. The availability of each feature depends on the type of the ProPILOT Assist system.

Feature Name	Feature Description
Conventional (fixed speed) Cruise Control	Allows the driver to drive the vehicle at a fixed speed without keeping their foot on the accelerator pedal.
Intelligent Cruise Control (ICC)	• Helps the driver maintain a selected distance from the vehicle ahead and can reduce the speed to match a slower vehicle ahead. • Decelerates the vehicle to a standstill when a vehicle ahead slows to a stop.
Extended Stop	Enables the vehicle to start moving again automatically if vehicle is stopped for less than approximately 30 seconds on the highway
Speed Limit Assist	A feature of the Intelligent Cruise Control that detects a change of the speed limit, indicates the detected speed limit sign and can apply to the vehicle set speed automatically or manually.
Speed Adjust by Route	A feature of Intelligent Cruise Control that adjusts the vehicle speed depending on freeway interchanges and freeway curves, using road information provided by the Map locator system.
Steering Assist	Assists the driver to help keep the vehicle within the center of the traveling lane.

How it works:

ProPILOT Assist Systems uses some or all of the following components:

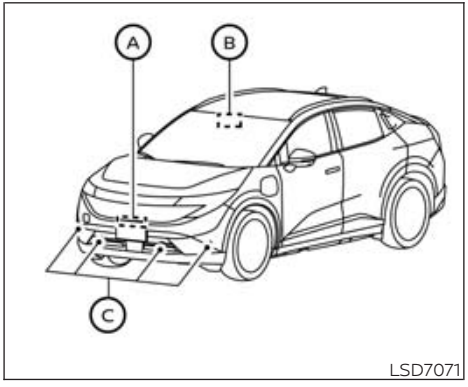

Ⓐ **Front radar sensor:**

Monitors the vehicle ahead in the same and adjacent lanes.

Ⓑ **Multi-sensing front camera (ProPILOT Assist 1.1) (if so equipped):**

Monitors the other vehicles and empty spaces in adjacent lanes as well as lane markings.

Ⓒ **Sonar sensors:**

Monitor the vehicles on the sides of the vehicle.

NOTE:

It is important to ensure the radar sensors, cameras and sonar sensors are clear before each drive. Unclean or damaged cameras and sensors, as well as environmental conditions, can affect system performance. For additional information, see "Driver assistance troubleshooting guide" section of the Owner's Manual.

Always keep the area near the radar sensors clean.

The radar sensors may be blocked by temporary ambient conditions such as snow, splashing water, mist or fog.

The blocked condition may also be caused by objects such as ice, frost or dirt obstructing the radar sensors.

Check for and remove objects obstructing the area around the radar sensors.

Do not attach stickers (including transparent material), install accessories or apply additional paint near the radar sensors.

Do not strike or damage the area around the radar sensors.

See a NISSAN certified LEAF dealer or other authorized repair shop if the area around the radar sensors is damaged due to a collision.

Precautions on repairing the bumper

When repairing the bumper, take caution because the radar sensors are installed on the bumper.

The radar sensor detects objects by emitting a radar signal and then measuring its reflection.

⚠ WARNING

If an improper repair is performed on the bumper (for example, application of putty made from different materials, repaint, etc.) the radar signal could be weakened or prevented from functioning properly. This may cause the radar sensor not to detect objects correctly. Improper repair may result in serious personal injury. If it is necessary to repair the bumper, it is recommended you visit a NISSAN certified LEAF dealer for this service.

Limitations

Many factors can impact the performance of ProPILOT Assist systems, causing the systems not to perform as intended. ProPILOT Assist functions should not be used in certain situations. These include (but are not limited to):

- Poor visibility due to heavy rain, snow, ice, fog, etc.
- Bright light (due to oncoming traffic, direct sunlight, etc.)
- Obstruction to radars, sensors and cameras caused by mud, dirt, ice, snow, etc.
- Interference to sensors and radars (such as a bike rack, decals, etc.)
- Faded or inconsistent lane markings
- Construction zones
- Barren landscape
- Wide or narrow lanes
- Hard deceleration
- Tollbooths

ProPILOT Assist may not react to:

- Stationary vehicles
- Pedestrians, bicycles or animals
- Road debris
- Road pylon in a construction zone

See "Overview" section of the Owner's Manual for additional system limitations.

⚠ WARNING

Listed below are the system limitations for the ProPILOT Assist functions and systems, including ProPILOT Assist 1.1 (if so equipped), Intelligent Cruise Control (ICC) and Steering Assist). Failure to operate the vehicle in accordance with these system limitations could result in serious injury or death:

- **These systems are primarily intended for use on freeways. It is not advisable to use these systems in city/urban traffic.**
- **These systems will not adapt automatically to all road conditions. They should be used in evenly flowing traffic. Do not use these systems on roads with sharp curves or in inclement weather or adverse road conditions.**
- **There are performance limits to all ProPILOT Assist functions. Never rely solely on these systems. These systems do not correct careless, inattentive, or absent-minded driving or overcome poor visibility in inclement weather.**

- When using these systems, the driver must be attentive to the driving task. When necessary, decelerate the vehicle speed by using the brake pedal, accelerate using the accelerator pedal, and steer the vehicle as appropriate in order to maintain a safe distance between vehicles and manage changing or dynamic traffic, vehicle and roadway conditions.
- When the ProPILOT Assist function automatically brings the vehicle to a stop, your vehicle can automatically accelerate if the vehicle is stopped for less than approximately 30 seconds on the freeway. Always be prepared to apply the brakes and stop your vehicle if necessary.
- Always check your surroundings before restarting the vehicle when it has been at a stop.
- These systems are not designed to detect anything other than motorized vehicles travelling in the same direction on the roadway. In particular, the systems do not detect the following objects:
  - Pedestrians, animals or objects in the roadway
  - Oncoming vehicles in the same lane
  - Motorcycles travelling offset in the travel lane
  - Road debris
- In the following situations, the ProPILOT Assist functions and system may not operate properly. To avoid accidents or unwanted system operation, never use these systems under the following conditions:
  - On roads with heavy, high-speed traffic or sharp curves
  - On slippery or adverse road surfaces, such as on wet, icy or snowy roads, or when roadway traffic is causing adverse travel conditions (i.e. road spray from passing vehicles)
  - On unpaved or uneven roadway surfaces, or on steep uphill or downhill roads
  - During inclement weather, such as rain, snow, fog, ice, sandstorms or dust storms
  - When sensor detection capabilities are reduced, for example:
  - When snow/ice/dirt are covering the sensors or the camera area of the windshield is fogged up
  - When objects, such as stickers, bike racks or cargo obstruct the vehicle sensors
  - When strong light (for example, sunlight or high beams from oncoming vehicles) enters the cameras or there is a sudden change in brightness (for example, entering or exiting a tunnel or driving under a bridge)
  - When traffic conditions make it difficult to keep a proper distance between vehicles because of frequent acceleration or deceleration, or when the approach warning activates frequently
  - When a complicated-shaped vehicle, such as a car carrier trailer or flatbed truck/trailer is near the vehicle ahead
  - When there is interference by other radar sources

- **When driving with vehicle equipment that is not original to the vehicle (for example, equipped with non-original brake, tire or suspension parts) or not within normal conditions (for example, tire wear, abnormal tire pressure, installation of tire chains, reduced headlight brightness)**
- **When excessively heavy baggage is loaded in the rear seat or cargo area of the vehicle, or when vehicle load capacity is exceeded.**
- **When driving on roads with missing, unclear, discontinued or less detectable lane markers or roads with multiple parallel lane markers, or roads with markings or features that might be detected as lane markers (for example, wheel ruts and paving seams)**
- **When driving on roads where the lane markers or traffic patterns are changing, temporary or unusual (for example, merging or separating lanes, widering/ narrowing lanes, exit ramps, toll gates, construction zones, lane closures)**
- **When the lane markers are not visible due to darkness and the headlights are off**

- **There are variety of conditions and situations in which the detection of a vehicle ahead may be delayed or the vehicle ahead may not be detected. A few examples include:**
  - **A vehicle suddenly cuts in front of your vehicle**
  - **When driving on a blind curve or winding road**
  - **A stationary vehicle or vehicle travelling at a much slower speed suddenly becomes apparent after the vehicle ahead changes lanes**
  - **When motorcycles are traveling offset from the center of the lane**
- **Drivers should always be attentive and take action if needed to manage the roadway and traffic situation.**
- **In some conditions, a vehicle or object can unexpectedly come into the sensor detection zone and cause automatic braking. Always stay alert and avoid using the systems where not recommended.**
- **Excessive noise will interfere with the warning chime sound and the beep may not be heard.**

INTELLIGENT CRUISE CONTROL (ICC)

Basic information

Intelligent Cruise Control (ICC) is a part of ProPILOT Assist. Read the entire ProPILOT Assist section before using this system, including how to operate the system and understanding the display. See "ProPILOT Assist Systems".

For additional information, see "How to operate ProPILOT Assist Systems", and "ProPILOT Assist displays and indicators" sections of the Owner's Manual.

The ICC system uses a forward facing radar sensor and is designed to operate as follows:

- When there is no vehicle detected in the same traveling lane, the ICC system maintains the speed set by the driver.
- When there is a vehicle detected in the traveling lane, the ICC system adjusts the speed to maintain the distance, selected by the driver, from the vehicle ahead. If the vehicle ahead comes to a stop, the vehicle decelerates to a standstill. Once your vehicle stops, the ICC system keeps the vehicle stopped.

- When the vehicle traveling ahead moves to a different traveling lane, the ICC system accelerates and maintains vehicle speed up to the set speed. Maximum speed: 90 MPH (144 km/h)

The ICC system can only apply up to 40% of the vehicle's total braking power and should only be used when traffic conditions allow vehicle speeds to remain fairly constant. If acceleration is required over the ICC system, the driver may override using the accelerator pedal at any time. The system will not brake the vehicle during driver acceleration. The ICC system requires a lead vehicle if the speed is below approximately 12 MPH (20 km/h). Vehicle must be traveling at 12 MPH (20 km/h) to initially set the ICC system.

NOTE:

Brake lights of the vehicle come on when braking is performed by the ICC system.

For additional available features of the ICC system, see:

- Speed Adjust by Route which adjusts speed based on freeway interchanges and freeway curves
- Speed Limit Assist helps alert the driver of a speed limit change and can adjust vehicle set speed

System operation

The ICC system can be set to one of two cruise control modes:

- Cruise control — fixed speed.

  For additional information, see "Conventional (fixed speed) cruise control" section of the Owner's Manual.
- Intelligent Cruise Control — adaptive

NOTE:

Steering Assist is not available in conventional (fixed speed) cruise control.

For Intelligent Cruise Control without Steering Assist, activate ProPILOT Assist and then turn off Steering Assist by the switch or in the settings menu. For additional information, see "How to operate ProPILOT Assist" and "Steering Assist" sections in the Owner's Manual.

For conventional (fixed speed) cruise control, push and hold the ProPILOT Assist switch for longer than approximately 1.5 seconds then set your desired speed. For additional information, see "Conventional (fixed speed) cruise control" section in the Owner's Manual.

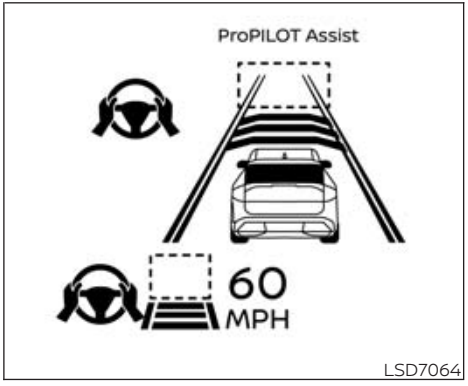

System set display — no vehicle detected ahead

If no vehicle ahead detected:

The ICC system maintains the vehicle set speed, similar to standard cruise control, as long as no vehicle is detected in the lane ahead.

When a vehicle is no longer detected ahead, the vehicle will gradually accelerate to driver set speed.

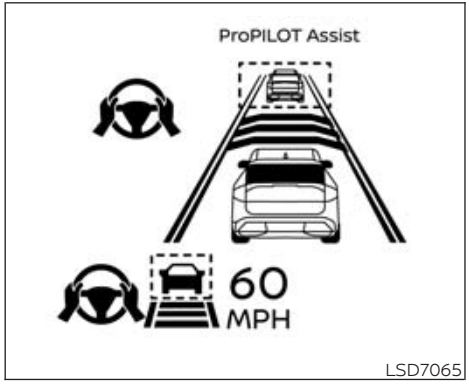

System set display — a vehicle detected ahead

If vehicle ahead is detected:

When a vehicle is detected in the lane ahead, the ICC system decelerates to the vehicle by controlling the throttle and applying the brakes to match the speed of the slower vehicle ahead and maintain the driver selected distance.

For additional information, see "How to operate ProPILOT Assist" section in the Owner's Manual.

If the vehicle ahead stops:

When a vehicle ahead is detected and it gradually decelerates to a stop, your vehicle will decelerate to a standstill. When at a standstill, the "(RES+) Follow Vehicle Ahead" message is displayed on the vehicle information display.

- For vehicles equipped with ProPILOT Assist with Navi-link or ProPILOT Assist 2.0, if the vehicle ahead stops and your vehicle is stopped less than approximately 30 seconds on the freeway, the "Follow Vehicle Ahead" message appears on the vehicle information display. When the vehicle ahead begins to move, your vehicle will start moving automatically.
- If not equipped with these systems, or not on a freeway, your vehicle will automatically start moving after 3 seconds.

To resume the ICC system after stop, push up the cancel switch to the RES+ direction or lightly depress the accelerator pedal.

⚠WARNING

If a vehicle cuts in after your vehicle was stopped by the ICC system, it cannot be detected depending on its position or direction. Your vehicle may approach the cut-in vehicle when restarting. Operate the brake pedal to maintain a safe distance to the vehicle ahead.

Passing a slower vehicle:

When passing a slower vehicle on the left, the ICC system will temporarily accelerate to aid in the lane change. The system will not exceed set speed during a lane change.

Approach warning:

If your vehicle comes closer to the vehicle ahead due to rapid deceleration of that vehicle or if another vehicle cuts in, the system warns the driver with the chime and ICC system display. Decelerate by depressing the brake pedal to maintain a safe vehicle distance if:

- The chime sounds.
- The vehicle ahead detection indicator blinks.
- You judge it necessary to maintain a safe distance.

The warning chime may not sound in some cases when there is a short distance between vehicles. Some examples are:

- When the vehicles are traveling at the same speed and the distance between vehicles is not changing.
- When the vehicle ahead is traveling faster and the distance between vehicles in increasing.

NOTE:

The approach warning chime may sound and the system display may flash when the radar sensor detects objects on the side of the vehicle or on the side of the road. This may cause the ICC system to decelerate or accelerate the vehicle The radar sensor may detect these objects when the vehicle is driven on winding, narrow, or hilly roads or when the vehicle is entering or exiting a curve. In these cases, you will have to manually control the proper distance ahead of you vehicle. Also, the sensor sensitivity can be affected by vehicle operation (steering maneuver or driving position in the lane) or traffic or vehicle conditions (for example, if a vehicle is being driven with some damage).

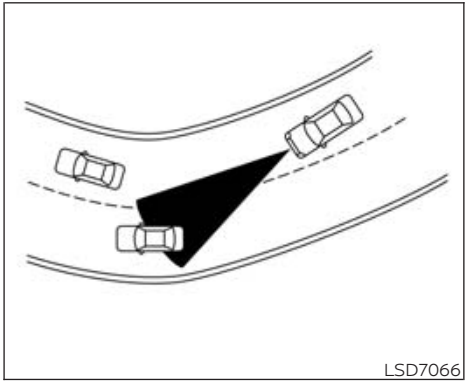

NOTE:

It is important to ensure the radar sensors, cameras and sonar sensors are clean before each drive. Unclean or damaged cameras and sensors, as well as environmental conditions can affect system performance. For additional information, see "Driver assistance troubleshooting guide" section of the Owner's Manual.

CALIFORNIA PROPOSITION 65 WARNING

⚠WARNING

Operating, servicing and maintaining a passenger vehicle or off-highway motor vehicle can expose you to chemicals including engine exhaust, carbon monoxide, phthalates, and lead, which are known to the State of California to cause cancer and birth defects or other reproductive harm. To minimize exposure, avoid breathing exhaust, do not idle the engine except as necessary, service your vehicle in a well-ventilated area and wear gloves or wash your hands frequently when servicing your vehicle. For more information go to www.P65Warnings.ca.gov/passenger-vehicle.

Foreword

BASIC INFORMATION

This manual was prepared to help you understand the operation and maintenance of your vehicle so that you may enjoy many miles of driving pleasure. Please read through this manual before operating your vehicle.

A separate Warranty Information Booklet explains details about the warranties covering your vehicle. The "Maintenance and schedules" section of this manual explains details about maintaining and servicing your vehicle. Additionally, a separate Customer Care and Lemon Law Information Booklet (U.S. only) will explain how to resolve concerns you may have with your vehicle, as well as reference your rights under applicable law.

When you require any service or have any questions, a NISSAN certified LEAF dealer will be glad to assist you with the extensive resources available to them.

In addition to factory installed options, your vehicle may also be equipped with additional accessories installed by NISSAN or by your NISSAN certified LEAF dealer prior to delivery. It is important that you familiarize yourself with all disclosures, warnings, cautions and instructions concerning proper use of such accessories prior to operating the vehicle and/or accessory. It is recommended you see a NISSAN certified LEAF dealer for details concerning the particular accessories with which your vehicle is equipped.

Your NISSAN certified LEAF dealer knows your vehicle best. When you require any service or have any questions, we will be glad to assist you with the extensive resources available to us.

READ FIRST — THEN DRIVE SAFELY

Before driving your vehicle, read your Owner's Manual carefully. This will ensure familiarity with controls and maintenance requirements, assisting you in the safe operation of your vehicle.

WARNING

IMPORTANT SAFETY INFORMATION REMINDERS!

Follow these important driving rules to help ensure a safe and comfortable trip for you and your passengers!

- **NEVER drive under the influence of alcohol or drugs.**
- **ALWAYS observe posted speed limits and never drive too fast for conditions.**
- **ALWAYS give your full attention to driving and avoid using vehicle features or taking other actions that could distract you.**
- **ALWAYS use your seat belts and appropriate child restraint systems. Pre-teen children should be seated in the rear seat.**
- **ALWAYS provide information about the proper use of vehicle safety features to all occupants of the vehicle.**
- **ALWAYS review this Owner's Manual for important safety information.**

MODIFICATION OF YOUR VEHICLE

This vehicle should not be modified. Modification could affect its performance, safety or durability, and may even violate governmental regulations. In addition, damage or performance problems resulting from modification may not be covered under NISSAN warranties.

WARNING

Installing an aftermarket On-Board Diagnostic (OBD) plug-in device that uses the port during normal driving, for example remote insurance company monitoring, remote vehicle diagnostics, telematics or EV system reprogramming, may cause interference or damage to vehicle systems. We do not recommend or endorse the use of any aftermarket OBD plug-in devices, unless specifically approved by NISSAN. The vehicle warranty may not cover damage caused by any aftermarket plug-in device.

WHEN READING THE MANUAL

This manual includes information for all features and equipment available on this model. Features and equipment in your vehicle may vary depending on model, trim level, options selected, order, date of production, region or availability. Therefore, you may find information about features or equipment that are not included or installed on your vehicle.

All information, specifications and illustrations in this manual are those in effect at the time of printing. NISSAN reserves the right to change specifications, performance, design or component suppliers without notice and without obligation. From time to time, NISSAN may update or revise this manual to provide Owners with the most accurate information currently available. Please carefully read and retain with this manual all revision updates sent to you by NISSAN to ensure you have access to accurate and up-to-date information regarding your vehicle. Current versions of vehicle Owner's Manuals and any updates can also be found in the Owner section of the NISSAN website at https://owners.nissanusa.com/nowners/navigation/manualsGuide. If you have questions concerning any information in your Owner's Manual, contact NISSAN Consumer Affairs. See the NISSAN CUSTOMER CARE PROGRAM page in this Owner's Manual for contact information.

IMPORTANT INFORMATION ABOUT THIS MANUAL

You will see various symbols in this manual. They are used in the following ways:

WARNING

This is used to indicate the presence of a hazard that could cause death or serious personal injury. To avoid or reduce the risk, the procedures must be followed precisely.

CAUTION

This is used to indicate the presence of a hazard that could cause minor or moderate personal injury or damage to your vehicle. To avoid or reduce the risk, the procedures must be followed carefully.

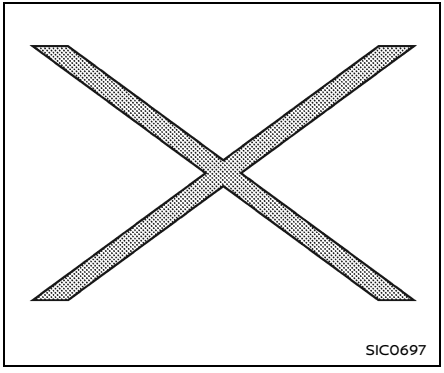

If you see the symbol above, it means **"Do not do this"** or **"Do not let this happen"**.

If you see a symbol similar to those above in an illustration, it means the arrow points to the front of the vehicle.

Arrows in an illustration that are similar to those above indicate movement or action.

Arrows in an illustration that are similar to those above call attention to an item in the illustration.

CALIFORNIA PERCHLORATE ADVISORY

Some vehicle parts, such as lithium batteries, may contain perchlorate material. The following advisory is provided: "Perchlorate Material - special handling may apply, see www.dtsc.ca.gov/hazardouswaste/perchlorate."

QR code

The word "QR code" is registered trademark of DENSO WAVE INCORPORATED in Japan and other countries.

© 2025 NISSAN MOTOR CO., LTD.

All rights reserved. No part of this Owner's Manual may be reproduced or stored in a retrieval system, or transmitted in any form, or by any means, electronic, mechanical, photocopying, recording or otherwise, without the prior written permission of Nissan Motor Co., Ltd.

NISSAN CUSTOMER CARE PROGRAM

NISSAN CARES ...

Both NISSAN and your NISSAN certified LEAF dealer are dedicated to serving all your automotive needs. Your satisfaction with your vehicle and your NISSAN certified LEAF dealer are our primary concerns. Your NISSAN certified LEAF dealer is always available to assist you with all your automobile sales and service needs.

However, if there is something that your NISSAN certified LEAF dealer cannot assist you with or you would like to provide NISSAN directly with comments or questions, please contact the NISSAN Consumer Affairs Department using our toll-free number:

For U.S. customers

1-800-NISSAN-1

(1-800-647-7261)

For Canadian customers
1-800-387-0122

The Consumer Affairs Department will ask for the following information:

- Your name, address, and telephone number
- Vehicle identification number (attached to the top of the instrument panel on the driver's side)
- Date of purchase
- Current odometer reading
- Your NISSAN certified LEAF dealer's name
- Your comments or questions

OR

You can write to NISSAN with the information at:

For U.S. customers

Nissan North America, Inc.

Consumer Affairs Department

P.O. Box 685003

Franklin, TN 37068-5003

or via e-mail at:

nnaconsumeraffairs@nissan-usa.com

For Canadian customers

Nissan Canada Inc.

5290 Orbitor Drive

Mississauga, Ontario L4W 4Z5

or via e-mail at:

information.centre@nissan-canada.com

If you prefer, visit us at:

www.nissanusa.com (for U.S. customers)
or

www.nissan.ca (for Canadian customers)

We appreciate your interest in NISSAN and thank you for buying a quality NISSAN vehicle.

NISSAN SOFTWARE LICENSE

- Your vehicle includes physical parts and/or physical components of such parts on which software and/or firmware ("Software") is embedded or installed. Additionally, updates to Software may be made available by NISSAN for download and installation by owners from time to time as determined by NISSAN in its sole discretion. Such Software, and all updates thereto, including updates delivered by NISSAN to your vehicle over the air (collectively "Updates"), are licensed, and not sold, to you. A portion of the Software may contain or consist of open source software, which may be used under the terms and conditions of the specific license under which the open source software is distributed. For other Software, including Software for which there is no separate license agreement between you and the manufacturer or owner of the Software, the terms and conditions governing your right to use and the use of the installed Software, including any Updates, applications, services, and content provided for or through the Software, are set forth in the End User License Agreement found at:

  For U.S. customers — https://www.nissanusa.com/owners/ownership

  For Canadian customers — https://www.nissan.ca/owners/owner-support.html

  Your use of the Software, including any Updates, constitutes consent to the End User License Agreement's terms and conditions.
- PLEASE NOTE: The End User License Agreement contains an arbitration clause. You may opt out of this arbitration clause within 30 days of the date of your vehicle purchase by sending a signed, written notice to NISSAN at the following address:

For U.S. customers	**For Canadian customers**
Nissan North America, Inc.	Nissan Canada Inc.
Consumer Affairs Department	Consumer Affairs Department
P.O. Box 685003	5290 Orbitor Drive
Franklin, TN 37068-5003	Mississauga, Ontario L4W 4Z5

- Please refer to Software Update in the "1. Getting Started" section of the NissanConnect® Owner's Manual for information about installing Over-the-Air Updates. For questions or assistance concerning installation of any Over-the-Air Updates, you may contact NISSAN Consumer Affairs at 1-800-333-0207 for U.S. customers, or for Canadian customers NISSAN Consumer Affairs at consumeraffairs@nissancanada.com. You may also choose to visit a NISSAN certified LEAF dealer for assistance - charges may apply.

MEMO

Table of Contents

Illustrated table of contents	0
Overview	EV
Charging	CH
Safety — Seats, seat belts and supplemental restraint system	1
Instruments and controls	2
Pre-driving checks and adjustments	3
Monitor, heater, air conditioner, audio and phone systems	4
Starting and driving	5
In case of emergency	6
Appearance and care	7
Do-it-yourself	8
Maintenance and schedules	9
Technical and consumer information	10
Index	11

MEMO

0 Illustrated table of contents

Seats, seat belts and Supplemental Restraint System (SRS) 4
Exterior front 5
Exterior rear 6
Passenger compartment 7
Cockpit 8
Instrument panel 9
Meters and gauges 10
Motor compartment 11
Warning and indicator lights 12

SEATS, SEAT BELTS AND SUPPLEMENTAL RESTRAINT SYSTEM (SRS)

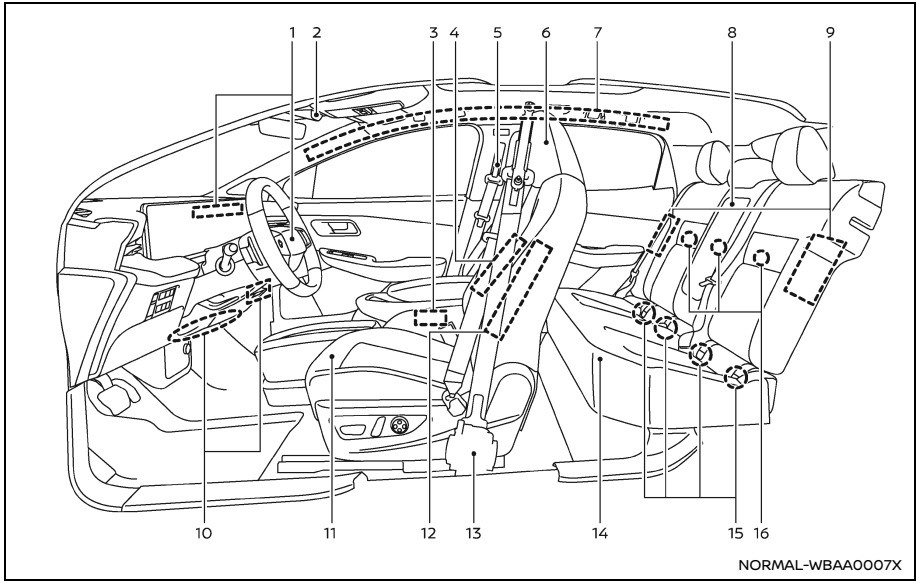

1. Supplemental front-impact air bags (P.127)
2. Front passenger air bag status light (P.127)
3. Occupant classification sensors (weight sensors) (P.127)
4. Front central seat-mounted side-impact supplemental air bag* (P.127)
5. Seat belts (P.96)
6. Head restraints/headrests (P.92)
7. Roof-mounted curtain side-impact and rollover supplemental air bags (P.127)
8. Rear armrest* (P.91)
9. Rear outboard seat-mounted side-impact supplemental air bags (P.127)
10. Driver and front passenger supplemental knee air bags (P.127)
11. Front seats (P.85)
12. Front seat-mounted side-impact supplemental air bags (P.127)
13. Seat belt pretensioners (P.145)
14. Rear seats (P.89)
    - Child restraints (P.106)
15. LATCH (Lower Anchors and Tethers for CHildren) system (for rear seats) (P.108)
16. Child restraint anchor points (for top tether strap) (P.118)

*: if so equipped

EXTERIOR FRONT

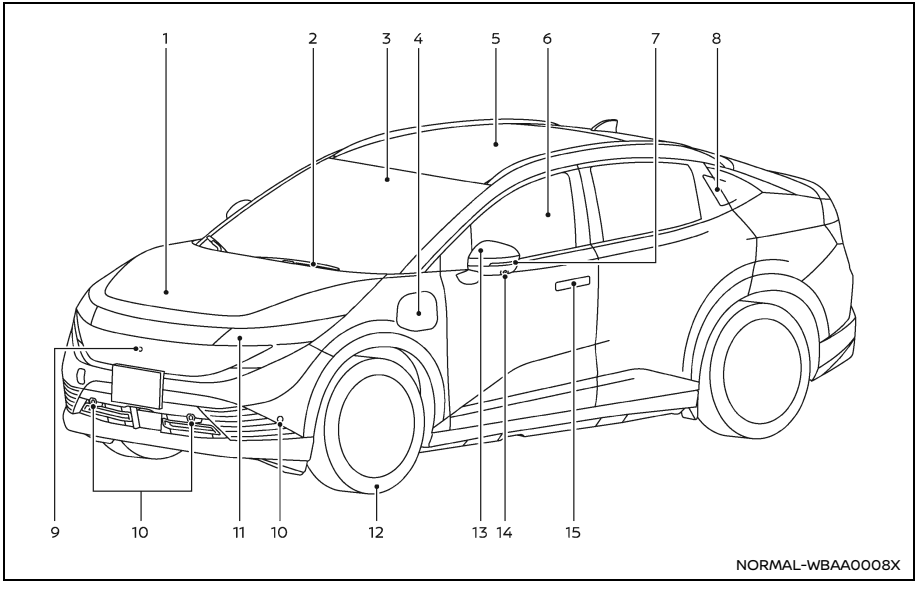

1. Hood (P.279)
2. Windshield wiper and washer
   - Switch operation (P.212)
   - Window washer fluid (P.521)
   - Windshield wiper deicer* (P.215)
3. Front camera (P.219, P.368, P.372, P.377, P.391, P.409, P.429)
4. Charge port lid (J1772 Normal charge) (P.285)
   - Immediate charge switch (P.74)
   - Charge connector unlock switch (P.66)
5. Dimming Panoramic Roof with heat shielding* (P.254)
6. Power windows (P.250)
7. Side turn signal light* (P.222)
8. Rear door handle (P.262)
9. Front view camera (P.298)
10. Sonar sensors*
    - Sonar system (P.470)
11. Headlights and turn signal lights (P.216)
12. Tires
    - Wheels and tires (P.529, P.561)
    - Emergency tire puncture repair kit (P.486)
    - Tire Pressure Monitoring System (TPMS) (P.165, P.333)
13. Outside mirrors (P.290)
14. Side view camera (P.298)
15. Doors
    - Keys (P.260)
    - Door locks (P.262)
    - Intelligent Key system (P.267)
    - Security system (P.210)

*: if so equipped

EXTERIOR REAR

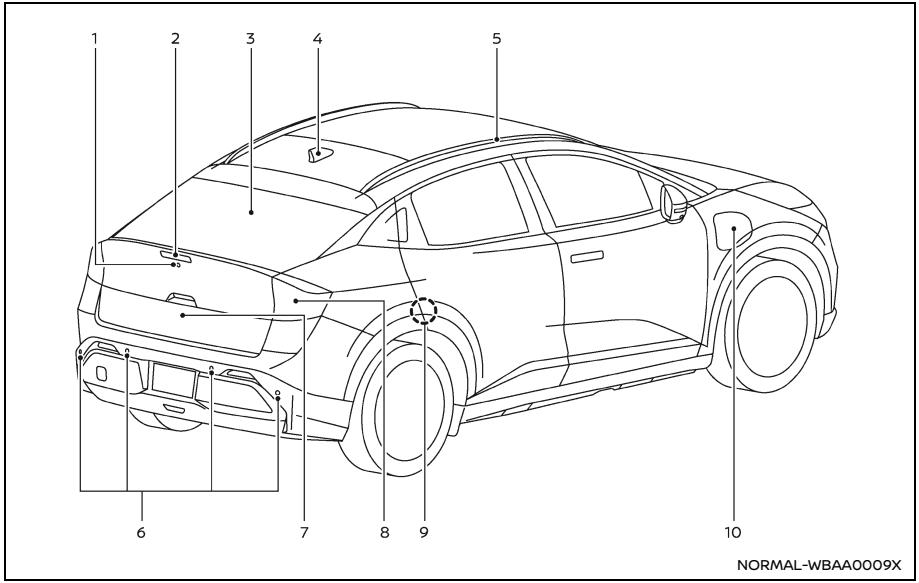

Example

1. Rear view camera (P.298)
2. High-mounted stop light (P.528)
3. Rear window defroster (P.215)
4. Antenna (P.327)
5. Roof rack* (P.249)
6. Sonar sensors
   - Sonar system (P.470, P.476)
   - Rear Automatic Braking (RAB) (P.453)
7. Liftgate (P.280)
   - Intelligent Key system (P.267)
8. Rear combination lights (P.528)
9. Child safety rear door locks (P.266)
10. Charge port lid (J3400 DC Fast Charge) (P.285)
    - Charge connector unlock switch (P.66)

*: if so equipped

PASSENGER COMPARTMENT

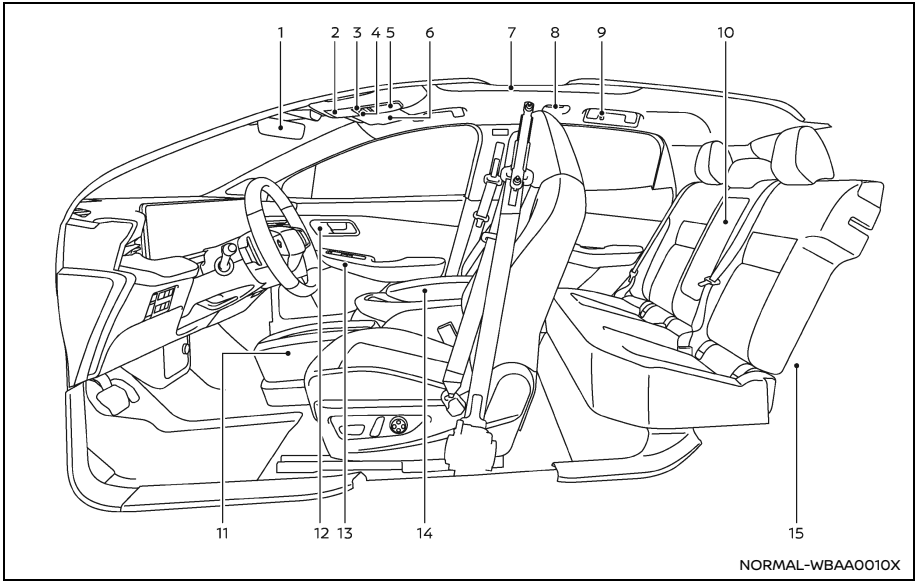

1. Inside mirror (P.289)
2. Sunglasses holder* (P.247)
3. Map lights (P.255)
   - Microphone**
4. Emergency Call (SOS) button (P.241)
5. Dimming Panoramic Roof with heat shielding switch* (P.254)
6. Sun visors (P.288)
7. Rear room light* (P.256)
8. Rear personal lights* (P.256)
9. Assist grips (P.289)
10. Rear cup holders* (P.243)
11. Front cup holders (P.243)
12. Memory seat switches* (driver's side) (P.292)
13. Front door armrest
    - Power window switch (P.250)
    - Outside mirror control switch (driver's side) (P.290)
    - Power door lock switches (P.266)
14. Center console
    - Armrest (P.91)
    - Console box (P.246)
    - Wireless charger* (P.231)
    - Power outlet* (P.233)
    - USB (Universal Serial Bus) charging connector* (P.230)
    - Heated rear seat switches* (P.225)
15. Cargo area
    - Adjustable luggage floor* (P.244)
    - Luggage hooks (P.248)
    - Emergency tire puncture repair kit (P.486)
    - NISSAN EVSE (Electric Vehicle Supply Equipment)* (P.42)
    - Power outlet* (P.233)
    - Cargo light (P.256)

*: if so equipped

**: Refer to the separate NissanConnect® Owner's Manual.

COCKPIT

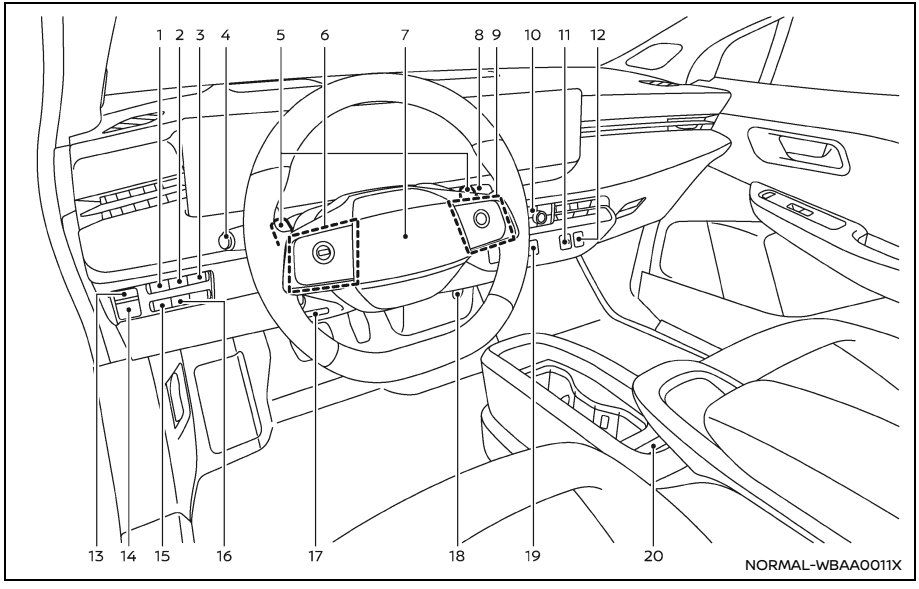

1. Heated steering wheel switch* (P.223)
2. Head Up Display (HUD) switch* (P.206)
3. AC ON switch* (P.233)
4. Headlight and turn signal switch (P.216)
5. Paddle selector (Manually selectable regenerative braking intensity)* (P.348)
6. Steering-wheel-mounted controls (left side)
   - ProPILOT Assist switch (P.409)
   - Volume control**
7. Steering wheel (P.288)
   - Horn (P.223)
8. Wiper and washer switch (P.212)
9. Steering-wheel-mounted controls (right side)
   - Vehicle information display control (P.171)
   - Touch screen display control**
   - Audio control**
   - Bluetooth® Hands-Free Phone System switches**
   - Voice recognition switch**
10. Hazard indicator flasher switch (P.484)
11. Drive Mode Selector (P.357)
12. e-Step switch (P.348)
13. Automatic brake hold switch (P.354)
14. Parking brake switch (P.351)
15. Steering Assist switch (P.409)
16. Power liftgate switch* (P.280)
17. Tilt and telescopic steering lock lever (P.288)
18. Power outlet (P.229)
19. Shift buttons (P.343)
20. USB (Universal Serial Bus) connection ports**

*: if so equipped

**: See the separate NissanConnect® Owner's Manual.

INSTRUMENT PANEL

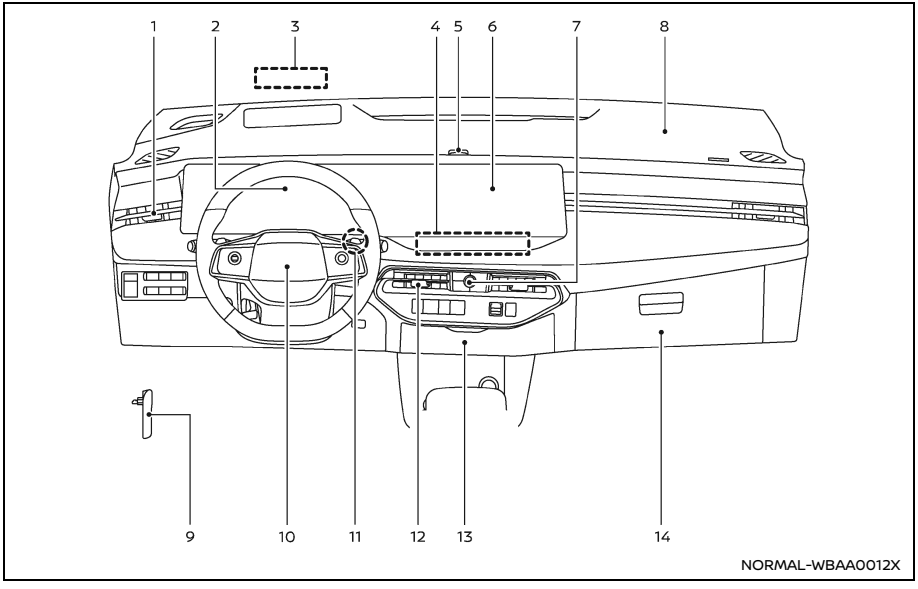

1. Side ventilator (P.317)
2. Meters and gauges (P.153)
   Vehicle information display (P.170)
   Clock (P.203)
3. Head Up Display (HUD)* (P.206)
4. Heater and air conditioner control (P.318)
   - Rear window and outside mirror* defroster switch (P.215)
   - Windshield wiper deicer switch* (P.215)
5. Charging status indicator light (P.75)
6. Touch screen display
   - Audio system** or navigation system**
   - Intelligent Around View® Monitor (P.298)
   - Bluetooth® Hands-Free Phone System**
   - Heater and air conditioner control display (P.318)
   - Heated seat* (P.225)
   - Heated steering wheel* (P.223)
7. Audio switch**
8. Front passenger supplemental air bag (P.127)
9. Hood release handle (P.279)
10. Driver supplemental front-impact air bag (P.127)
11. Push-button power switch (P.339)
12. Center ventilator (P.317)
13. Center storage (P.246)
14. Glove box (P.246)

*: if so equipped

**: See the separate NissanConnect® Owner's Manual.

METERS AND GAUGES

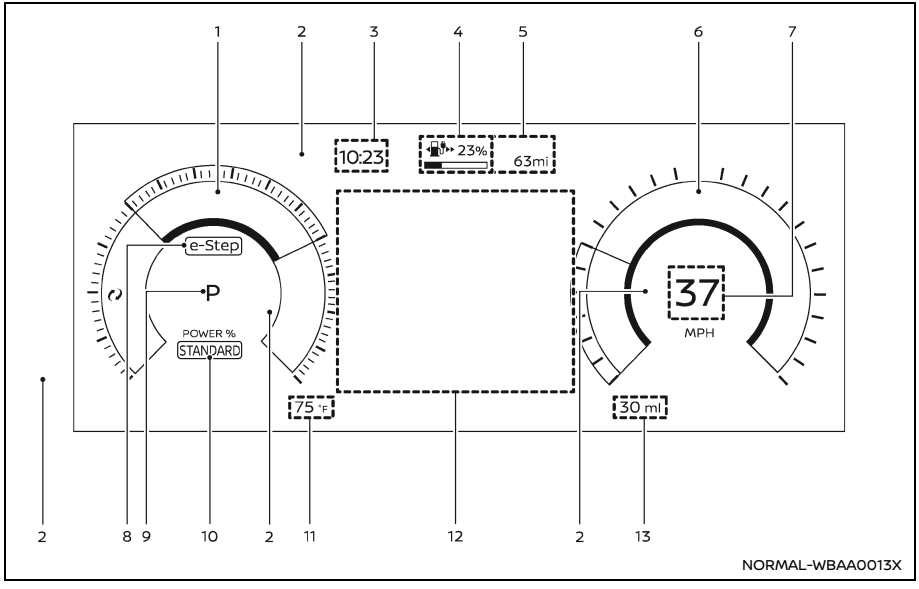

1. Power meter (P.155)
2. Warning and indicator lights (P.159)
3. Clock (P.203)
4. Li-ion battery available charge gauge (P.156)
5. Estimated driving range (P.157)
6. Speedometer (P.155)
7. Vehicle speed (P.155)
8. e-Step indicator (P.158, P.348)
9. Shift position indicator (P.158)
10. Drive Mode Selector indicator (P.357)
11. Outside air temperature (P.203)
12. Vehicle information display (P.170)
13. Odometer (P.155)

The view of the meter screen can be changed. (See "Changing the meter screen view" (P.154).)

MOTOR COMPARTMENT

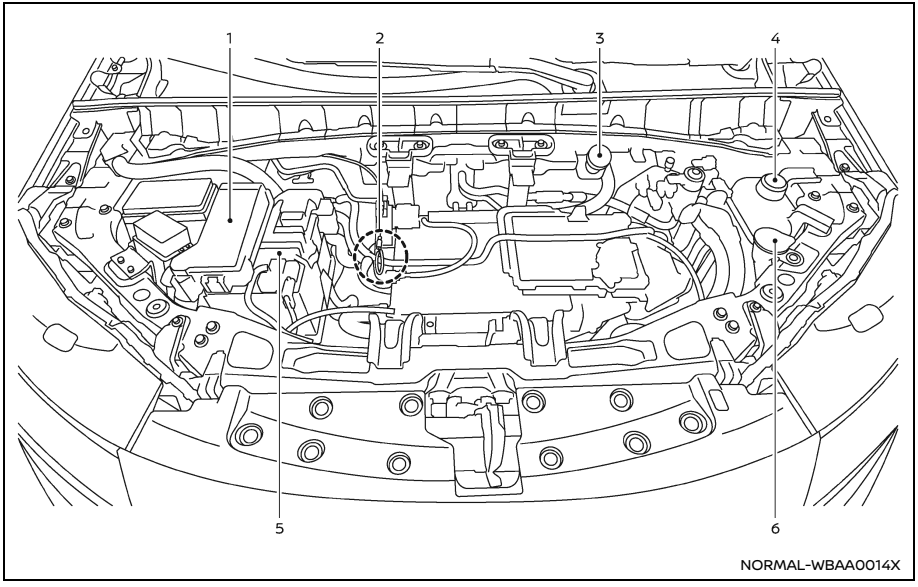

Example

1. Fuse/fusible link holders (P.527)
2. DC Fast Charge connector mechanical release (P.67)
3. Brake fluid reservoir (P.519)
4. Coolant reservoir (P.518)
5. 12-volt battery (P.523)
6. Window washer fluid reservoir (P.521)

WARNING AND INDICATOR LIGHTS

Red light	Name	Page
	12-volt battery charge warning light	159
BRAKE	Brake warning light	160
	Electric power steering warning light	161
	Electric shift control system warning light	161
PARK	Electronic parking brake warning light	161
	Hands OFF warning light	162
	Master warning light	162
	Seat belt warning light	162
	Supplemental air bag warning light	163

Yellow light	Name	Page
ABS	Anti-lock Braking System (ABS) warning light	163
OFF	Approaching Vehicle Sound for Pedestrians (VSP) OFF indicator light	163

Yellow light	Name	Page
OFF	Automatic Emergency Braking (AEB) system OFF warning light	163
	Brake system warning light	164
	Electric power steering warning light	164
	EV system warning light	165
OFF	Front passenger air bag status light	165
	Low battery charge warning light	165
	Low tire pressure warning light	165
	Master warning light	167
	Power limitation indicator light	167
OFF	Rear Automatic Braking (RAB) system OFF warning light	167
	Slip indicator light	168
OFF	Vehicle Dynamic Control (VDC) off indicator light	168

Other light	Name	Page
HOLD	Automatic brake hold indicator light (white)	168
HOLD	Automatic brake hold indicator light (green)	168
	Exterior light indicator	168
	High beam assist indicator light	169
	High beam indicator light	169
	Plug in indicator light	169
READY	READY to drive indicator light	169
	Turn signal/hazard indicator lights	169

Overview

The EV (Electric Vehicle) system 14
Li-ion battery 14
Basic information 14
Driving with a discharged Li-ion battery 15
Charging the 12-volt battery 16
Li-ion battery temperature control system 17
High voltage precautions 20
High-voltage components 20
Road accident precautions 21
Basic information 21
Emergency shut-off system 22
EV (Electric Vehicle) characteristics 23
Basic information 23
Noise and vibration 23
Life with an EV (Electric Vehicle) (scene guide) 24
Basic information 24
Charging the Li-ion battery 24
Checking Li-ion battery charging status 24
Operating the climate control system before driving 25
Starting your vehicle 26
Driving the vehicle 27
Charging after driving 30
Vehicle to Load (V2L) system (if so equipped) 30
Efficient use of your vehicle 31
Range 31
Improve driving range 31
Li-ion battery life 32
Li-ion battery maintenance 32
EV (Electric Vehicle) unique information 33
Meters and indicators 33
Approaching Vehicle Sound for Pedestrians (VSP) system 35
Electric Vehicle screen 36

THE EV (Electric Vehicle) SYSTEM

The LEAF is an electric vehicle. Some of the vehicle's systems operate differently and have different operating characteristics than vehicles equipped with an internal combustion engine. It is important to carefully review the entire Owner's Manual for this reason. The main difference is the LEAF is powered by electricity. The LEAF does not require and it is not capable of using gasoline like a vehicle powered by a traditional internal combustion engine. The LEAF uses electricity stored in the lithium ion (Li-ion) battery. The vehicle Li-ion battery must be charged with electricity before the vehicle can be driven. As the vehicle operates, the Li-ion battery gradually discharges. If the Li-ion battery becomes completely discharged, the vehicle will not operate until it is recharged.

This vehicle uses two types of batteries. One is the 12-volt battery that is the same as the battery in vehicles powered by gasoline engine, the other is the Li-ion battery (high voltage).

The 12-volt battery provides power to the vehicle systems and features such as the audio system, supplemental restraint systems, headlights and windshield wipers.

The Li-ion battery provides power to the electric motor (traction motor) that moves the vehicle.

The Li-ion battery also charges the 12-volt battery.

The vehicle must be plugged in for the Li-ion battery to be charged. Additionally, the vehicle system can extend the driving range by converting driving force into electricity that is stored in the Li-ion battery while the vehicle is decelerating or being driven downhill. This is called regenerative braking. This vehicle is considered to be an environmentally friendly vehicle because it does not emit exhaust gases, such as carbon dioxide and nitrogen oxide.

LI-ION BATTERY

BASIC INFORMATION

WARNING

Your vehicle contains a sealed Li-ion high voltage battery. If the Li-ion battery is disposed of improperly, there is a risk of severe burns and electrical shock that may result in serious injury or death and there is also a risk of environmental damage.

CAUTION

To prevent damage to the Li-ion battery:

- **Do not expose the vehicle to extreme ambient temperatures for extended periods.**
- **Do not store the vehicle in temperatures below −13°F (−25°C) for over seven days.**
- **Do not leave your vehicle for over 14 days where the Li-ion battery available charge gauge reaches a zero or near zero.**
- **Do not use the Li-ion battery for any other purpose.**

- **Do not spill water onto the Li-ion battery or load large amounts of water in open containers (aquariums or buckets) into the vehicle. If the water spills onto the Li-ion battery, it may cause a short circuit and damage the Li-ion battery.**

NOTE:

- **If the outside temperature is –13°F (–25°C) or less, the Li-ion battery may freeze and it cannot be charged or provide power to drive the vehicle. Move the vehicle to a warm location.**
- **The capacity of the Li-ion battery in your vehicle to hold a charge will, like all such batteries, decrease with time and usage. As the battery ages and capacity decreases, this will result in a decrease from the vehicle's initial driving range. This is normal, expected, and not indicative of any defect in your Li-ion battery.**
- **The Li-ion battery has limited service life, and when its charging capacity falls below a specific level, the EV system warning light will illuminate. Owners should bring their vehicle in for inspection and possible battery replacement.**
- **It is recommended that you visit a NISSAN certified LEAF dealer for information about recycling or disposal of the Li-ion battery. Do not attempt to recycle or dispose of the Li-ion battery yourself.**

DRIVING WITH A DISCHARGED LI-ION BATTERY

When a destination is set in the Map locator system that exceeds the available vehicle range, the Map locator system automatically searches the location of nearby charging stations (if so equipped). When the nearby charging station locations are displayed, charge the Li-ion battery as soon as possible.

Warning lights illuminate on the instrument panel and messages are displayed on the vehicle information display to inform you that the Li-ion battery charge is low.

The vehicle's range is very limited when these warning lights illuminate and messages are displayed. Follow the instructions on the vehicle information display and immediately charge the vehicle at the nearest charging station.

There are four levels of information that will be displayed as the Li-ion battery becomes discharged:

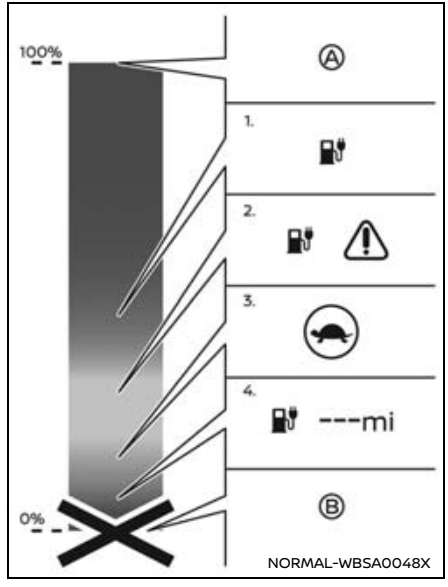

Ⓐ Full charge
1. Battery charge reminder
2. Low Li-ion battery warning
3. Traction motor output limited
4. "---" indication

Ⓑ Battery discharged

1. The charge reminder will pop up to let the driver know when the remaining driving distance is low. The driver can set when the charge reminder will be triggered.

   When the set remaining driving distance is reached, the "Battery Low Please Charge Soon" will pop up on the vehicle information display. The remaining driving distance can be set between 50~120 miles (50~120 km). (See "EV Settings" (P.177).)
2. The following warning lights illuminate on the meter and messages are displayed on the vehicle information display at the same time to indicate low Li-ion battery charge. Charge the Li-ion battery as soon as possible.
   - The low battery charge warning light (yellow)
   - The master warning light (yellow)
   - "Battery Low Please Charge Now" warning message is displayed on the vehicle information display. See "Vehicle information display warnings and indicators" (P.179).
3. When the power limitation indicator light illuminates, traction motor output is limited resulting in reduced vehicle speed. Stop the vehicle in a safe location before the Li-ion battery becomes completely discharged and there is no power available to drive the vehicle. See "If the Li-ion battery becomes completely discharged" (P.500).

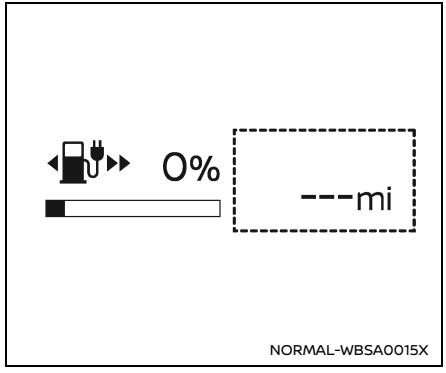

4. If the vehicle is driven and the Li-ion battery continues to discharge, the estimated driving range changes to "---".

CHARGING THE 12-VOLT BATTERY

Basic information

The 12-volt battery is charged automatically using electricity stored in the Li-ion battery.

While vehicle is in use

The Li-ion battery charges the 12-volt battery as necessary when the power switch is in the READY to drive position or ON position.

The 12-volt battery is not charged in the following conditions.

- When the power switch is in Auto ACC position.
- When the power switch is in ON position and shift position is in the N (Neutral) position.

While the vehicle is not in use

When the EV (Electric Vehicle) system is off for an extended time, the 12-volt battery may be automatically charged for a short period of time on a regular basis.

LI-ION BATTERY TEMPERATURE CONTROL SYSTEM

Basic information

This system helps to prevent the Li-ion battery temperature from becoming too high or low.

Li-ion battery cooler

- When the Li-ion battery temperature becomes higher, it can cause an acceleration decline and longer charging time by the DC Fast Charger.
- The Li-ion battery temperature tends to rise in the case of continued driving on a freeway, repeated use of DC Fast Charger, and combination of both operations.
- The Li-ion battery cooler will automatically turn on when the Li-ion battery temperature rises during driving or DC Fast Charging. It will keep the Li-ion battery temperature to a level that does not activate power limitation or charging inhibition. This function is useful when driving a long distance with repeated use of DC Fast Charger.
- When the Li-ion battery cooler operates, more electric power will be consumed than in normal driving condition, which could result in a decreased energy economy and driving range. Avoid unnecessary acceleration and deceleration and drive at a moderate speed.

Battery cooling assist:

This function is available during the DC Fast Charge.

Using the touch screen display, the battery cooling assist function can be turned on/off.

Turning this function on will improve the Li-ion battery cooling capacity and reduce charging time.

See "Basic information" (P.36).

Li-ion battery heater (if so equipped)

- When the Li-ion battery temperature becomes lower, it can cause longer charging time by the DC Fast Charger.
- The Li-ion battery heater will automatically turn on when the Li-ion battery temperature is cold during DC Fast Charging. It will also turn on while driving, if the function is enabled on the touch screen display. It will raise the Li-ion battery temperature to avoid extending charging time when using the DC Fast Charger.
- When the Li-ion battery heater operates while DC Fast Charging, it uses electrical power from the DC Fast Charger.

  The improvement of charging capacity varies depending on the temperature and/or state of charge of the Li-ion battery.

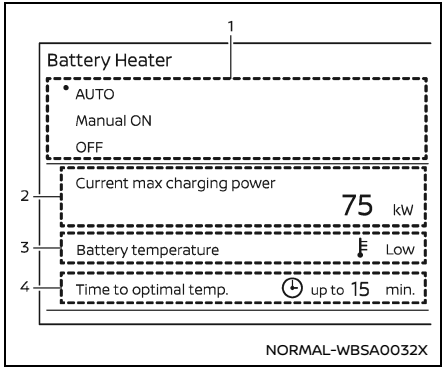

Example

1. Battery Heater AUTO (if so equipped)

   Battery Heater Manual ON

   Battery Heater OFF
2. Current max charging power

   Indicates the approximate maximum charging power.

   "--kW" will be displayed when charging is not possible.

   (Charging is not possible when the state of charge is 100%)
3. Battery temperature

   Indicates the current Li-ion battery temperature.

   - Low: Battery temperature is low. It is recommended to turn ON the battery heater before the DC Fast Charge.
   - Optimal: Battery temperature is reached to the optimal temperature for charging.
   - (non display): Battery temperature is already high enough for charging.
4. Time to optimal temp.

   Indicates the approximate time it will take to reach the optimal battery temperature when the battery heater is activated. The time shown may vary depending on outside temperature and driving conditions, etc.

   If the battery temperature is optimal or high enough already, this will not be displayed.

2, 3 (if applicable) and 4 above will not be displayed while charging.

3 and 4 above will not be displayed when the Battery Heater AUTO (if so equipped) is selected.

Battery Heater Manual ON:

To allow the Li-ion battery heater to operate while driving, enable the function on the touch screen display.

See "Electric Vehicle screen" (P.36).

NOTE:

- **When the Li-ion battery heater operates while driving, more electric power will be consumed than in normal driving condition, which could result in a decreased energy economy and driving range. Take account of state of charge of the Li-ion battery and estimated driving range while driving.**
- **When use of the battery heater is recommended, the battery temperature on the Battery heater switch screen indicates "Low".**

  The current maximum charging power is also shown on the screen. If the current maximum charging power is lower than the charging power of the DC Fast Charger at your destination, it is recommended to turn the battery heater on.

  The time it takes for the battery heater to reach the optimal temperature for charging is also displayed on the screen. Refer to the displayed time, you can turn on the battery heater before arriving at a DC Fast Charge station.

  The time it takes for the battery to reach the optimal temperature for charging is an estimate only, and may vary depending on the outside

temperature and driving conditions, etc.

- **When the Battery Heater "Manual ON" is selected, the setting will be turned to "OFF" or "AUTO" automatically depending on the condition when the DC Fast Charging is completed or the power switch is placed in the OFF position.**

Battery Heater AUTO (if so equipped):

When the Battery Heater AUTO is chosen, based on the DC fast charger information (charger output, travel time required to a DC fast charger) set by the Map locator system, the battery is warmed at the optimal temperature and timing for DC fast charging, which reduces the DC fast charging time with waste-free heater power consumption.

When the function is activated, the Battery Temperature Management Status indicator will appear on the Electric Vehicle screen and the "Electric Vehicle" widget.

- This function can be activated only during route guidance with the Map locator system. To enable the function, select "AUTO" on the battery heater in the Map locator system setup screen.
- When the Battery Heater operates while driving, more electric power will be consumed than in normal driving condition, which could result in a decreased energy economy and driving range.
- If the travel time to the DC fast charger is short, the battery temperature may not rise sufficiently and charging performance may not improve.
- This function may continue if you cancel the route guidance immediately after setting a route including the DC fast charger in the Map locator system, but this function will be deactivated after a certain amount of driving.
- If you cancel the route guidance before arriving at a DC fast charger, this function will be deactivated. In addition, if the route guidance is canceled near a DC fast charger, this function will be continued until a DC fast charging is performed or a certain distance away from the charging point. If you do not need the battery heating, turn it off with the battery heater screen.
- If a transit point (other than DC fast charger) is added before arriving at a DC fast charger, this function will not be activated until the vehicle has passed the transit point.
- Even during the Map locator system route guidance, the heater may not be activated in the following cases.
  - Li-ion battery state of charge is low.
  - If the DC fast charger output is low or predicted state of charge value at the arrival to a DC fast charger is high.

Li-ion battery heater icon (if so equipped):

When the Li-ion battery heater is activated, the Battery Temperature Management Status indicator will appear on the Electric Vehicle screen and the "Electric Vehicle" widget.

: Automatically adjusting the battery temperature.

: Automatically heating the battery for fast charging.

: Actively heating the battery (turned ON manually or during charging when the battery is cold).

Battery Temperature Management (if so equipped):

When driving to the destination with the guidance of the Map locator system, the driving load is predicted from the route information, and the Li-ion battery temperature is controlled, contributing to the

improvement of energy economy and DC fast charging speed.

This function is automatically enabled during route guidance by the Map locator system. When the function is activated, the Battery Temperature Management Status indicator "" appears on the Electric Vehicle screen and the "Electric Vehicle" widget.

Even during the Map locator system route guidance, this function may not be enabled in the following cases.

- When you deviate from the route guided by the Map locator system.
- When the GPS reception is poor.
- When a DC fast charger has been set as a transit point, the time between the stop of route guidance after arriving at a DC fast charger and the "Continue" button on the Map locator system.

HIGH VOLTAGE PRECAUTIONS

HIGH-VOLTAGE COMPONENTS

WARNING

- **The EV (Electric Vehicle) system uses high voltage approximately DC 400 volt. The system can be hot during and after starting and when the vehicle is shut off. Be careful of both the high voltage and the high temperature. Follow the warning labels that are attached to the vehicle.**
- **Never touch, disassemble, remove or replace high-voltage parts and cables as well as their connectors because they can cause severe burns or electric shock that may result in serious injury or death. High-voltage cables are colored orange. The vehicle high voltage system has no user serviceable parts. It is recommended that you take your vehicle to a NISSAN certified LEAF dealer for any necessary maintenance.**

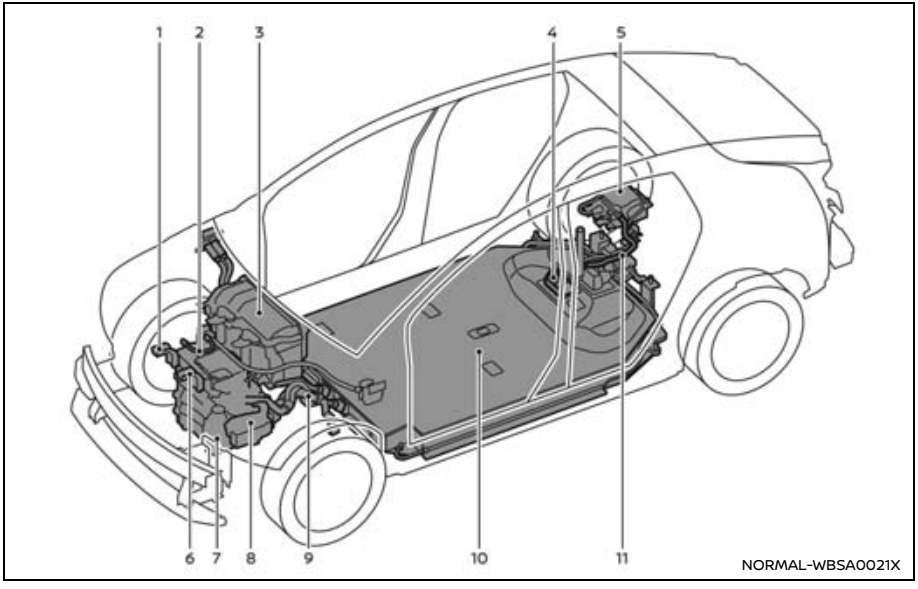

1. On Board Charger (OBC)
2. High voltage junction box
3. PTC cabin heater
4. Service plug
5. DC/AC inverter
6. DC/DC converter
7. Traction motor/Inverter/Reducer
8. Air conditioner compressor
9. High-voltage wire harnesses (colored orange)
10. Li-ion battery
11. PTC battery heater

BASIC INFORMATION

WARNING

In case of a collision:

- **If your vehicle is drivable, pull your vehicle off the road, push the shift button "P" to shift to the P (Park) position, apply the parking brake and turn the EV (Electric Vehicle) system off.**
- **Check your vehicle to see if there are exposed high-voltage parts or cables. For their locations, see "High-voltage components" (P.20). To avoid personal injury, never touch high-voltage wiring, connectors, and other high-voltage parts, such as the On Board Charger (OBC), inverter unit and Li-ion battery. An electric shock may occur if exposed electric wires are visible when viewed from inside or outside of your vehicle. Therefore, never touch exposed electric wires.**
- **If the vehicle receives a strong impact to the floor while driving, stop the vehicle in a safe location and check the floor.**

- **Leaks or damage to the Li-ion battery may result in a fire. If you discover them, contact emergency services immediately. Since the fluid leak may include electrolyte from the Li-ion battery, never touch the fluid leak inside or outside the vehicle. If the fluid contacts your skin or eyes, wash it off immediately with a large amount of water and receive immediate medical attention to help avoid serious injury.**
- **If a fire occurs in the EV (Electric Vehicle), leave the vehicle as soon as possible. Only use a type ABC, BC or C fire extinguisher that is meant for use on electrical fires. Using a small amount of water or the incorrect fire extinguisher can result in serious injury or death from electrical shock.**
- **If your vehicle needs to be towed, do it with the front wheels raised. If the front wheels are on the ground when towing, the EV (Electric Vehicle) system may be damaged.**
- **If you are not able to safely assess the vehicle due to vehicle damage, do not touch the vehicle. Leave the vehicle and contact emergency services. Advise 1st responders that this is an electric vehicle.**
- **In the event of an accident that requires body repair and painting, the Li-ion battery pack and high voltage parts such as the inverter, including the wire harness, should be removed prior to painting. It is recommended that you visit a NISSAN certified LEAF dealer for this service. Li-ion battery packs exposed to heat in the paint booth will experience capacity loss. Damaged Li-ion battery packs may also pose safety risks to untrained mechanics and repair personnel.**

EMERGENCY SHUT-OFF SYSTEM

The emergency shut-off system is activated and the high-voltage system automatically turns off in the following conditions:

- Front and side collisions in which the air bags are deployed.

- Certain rear collisions.

- Certain EV (Electric Vehicle) system malfunctions

For the above collisions and certain other EV (Electric Vehicle) system malfunctions, the READY to drive indicator light will turn off. See "Warning lights, indicator lights and audible reminders" (P.159).

The emergency shut-off activates for the above collisions to minimize risk of an event that could cause injury or an accident. If the emergency shut-off system activates, the EV system may not be switched to READY to drive position, it is recommended that you visit a NISSAN certified LEAF dealer. Even if the power switch is switched to READY to drive position, the system may shut-off suddenly. Therefore, drive cautiously to the nearest certified repair facility; it is recommended that you visit a NISSAN certified LEAF dealer for service.

EV (Electric Vehicle) CHARACTERISTICS

BASIC INFORMATION

WARNING

- **Pay special attention to pedestrians. Because there is no engine noise, pedestrians may not know the vehicle is approaching, moving or about to move, and may step into the path of vehicle travel.**
- **When leaving the vehicle, be sure to turn off the EV (Electric Vehicle) system.**
- **Be sure to push the shift button "P" to shift to the P (Park) position and apply the parking brake when parking because the vehicle can move when the READY to drive indicator light is ON. When the READY to drive indicator light is ON, do not leave your vehicle in a shift position other than the P (Park) position.**
- **Keep the brake pedal depressed until you are ready to drive. When the vehicle is in the D (Drive), B or R (Reverse) position, if you release the brake pedal and do not depress accelerator, the vehicle will creep and may start abruptly. This may cause serious injury or death.**

NOTE:

- **The vehicle cannot run with a discharged Li-ion battery. Repeated acceleration consumes more power from the Li-ion battery than driving at a steady speed.**
- **This vehicle is equipped with a regenerative brake system. The primary purpose of regenerative brake system is to provide some power to recharge the Li-ion battery and extend driving range. A secondary benefit is "engine braking" that operates based on Li-ion battery conditions.**
- **In the D (Drive) position, when the accelerator pedal is released, the regenerative brake system provides some deceleration.**
- **When you select the B position (if so equipped) or manually select strong regenerative braking (if so equipped) and take your foot off the accelerator pedal, more regenerative brake is applied than in the D (Drive) position.**
- **Less deceleration is provided by the regenerative brake system when the Li-ion battery is charged to the limit. Regenerative brake is automatically reduced when the Li-ion battery is charged to the limit to prevent the Li-ion battery from becoming overcharged. Regenerating brake is also automatically reduced when the battery temperature is high/low to prevent Li-ion battery damage.**
- **The brake pedal should be used to slow or stop the vehicle depending on traffic or road conditions. The vehicle brakes are not affected by regenerative brake system operation.**
- **The regenerative brake system may not function properly depending on tire conditions.**

NOISE AND VIBRATION

You might experience the following noise or vibration as a normal characteristic of this vehicle.

- Traction motor noise from motor compartment

- Water pump and radiator fan noise while charging
- Compressor and radiator fan noise when the Climate Schedule or the remote climate control (if so equipped) is used
- Relay operation noise and vibration at start-up and shut-down of the EV (Electric Vehicle) system (power switch placed in the ON and OFF position)
- Approaching Vehicle Sound for Pedestrians (VSP)

LIFE WITH AN EV (Electric Vehicle) (scene guide)

BASIC INFORMATION

This section provides a brief explanation of the most important EV functions. Refer to the specific sections of this manual for detailed explanations of the vehicle features and operation.

CHARGING THE LI-ION BATTERY

WARNING

The EV (Electric Vehicle) system uses a high voltage current. Failure to follow the proper handling instructions may cause serious injury or death. Be sure to read the "CH. Charging" section and follow the procedures and guidelines described.

CHECKING LI-ION BATTERY CHARGING STATUS

The Li-ion battery charge status can be checked on the MyNISSAN App (if so equipped).

If the Li-ion battery is not sufficiently charged, you can start charging the Li-ion battery via the remote charge function. For additional information, see "Charging related remote function" (P.74).

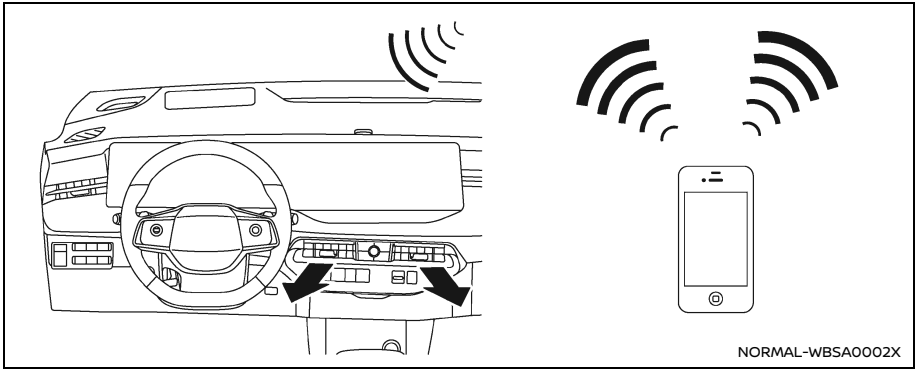

OPERATING THE CLIMATE CONTROL SYSTEM BEFORE DRIVING

The vehicle's heating and air conditioning system can be turned on via remote control with an internet enabled smart phone using MyNISSAN App (if so equipped).

This allows the interior of the vehicle to be heated or cooled while the vehicle is charging. This reduces the load on the Li-ion battery while the vehicle is being driven and can help increase the vehicle driving range. For additional information, please visit http://www.nissanusa.com/connect/.

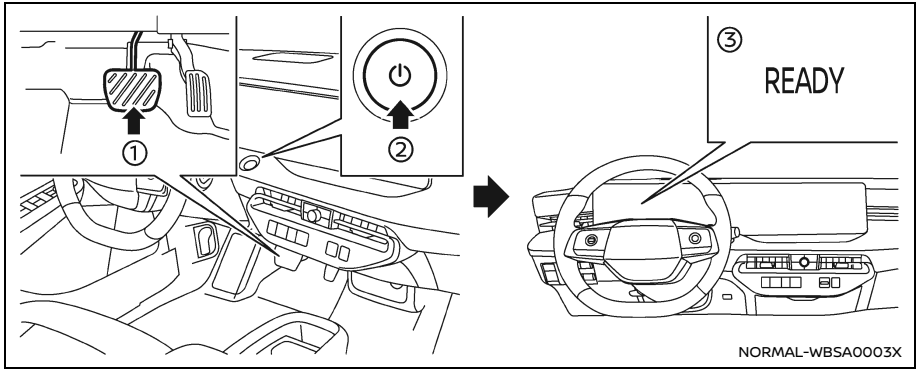

STARTING YOUR VEHICLE

1. Firmly depress the brake pedal ①.
2. Push the power switch ②.
3. Check that the READY to drive indicator light ③ illuminates. See "READY to drive indicator light" (P.169).
4. Check the Li-ion battery level and the estimated driving range shown on the vehicle information display. See "Li-ion battery available charge gauge" (P.156) and "Estimated driving range" (P.157).

NOTE:

- **Before driving, compare the driving distance to the destination displayed on the Map locator system screen with the estimated driving range shown on the meter. Determine if it will be necessary to charge the Li-ion battery before or while driving to your planned destination.**
- **If it is necessary to charge the Li-ion battery, use the Map locator system to search for available charging stations on your planned driving route.**

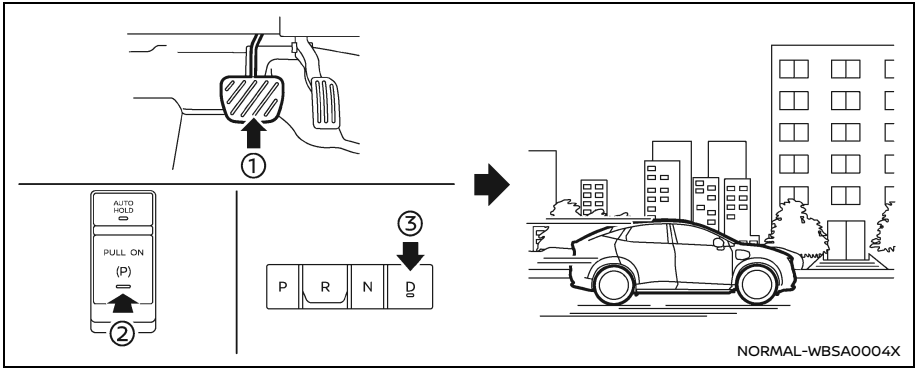

1. Depress the brake pedal ①.
2. Release the parking brake ②.
3. Shift the vehicle to the D (Drive) position ③.
4. Confirm that the vehicle is in the D (Drive) position. The shift indicator on the shift button illuminates and “D” is displayed on the vehicle information display.
5. Release the brake pedal.
6. Depress the accelerator pedal and start driving.

DRIVING THE VEHICLE

Basic information

There are the following gear positions for driving the vehicle forward:

- Use the D (Drive) position for optimum driving performance.
- Use the B position (if so equipped) or the paddle selector (if so equipped) to increase the regenerative braking intensity for downhill driving. More regenerative brake is applied when the accelerator pedal is released in comparison to the D (Drive) position.

  See "Electric shift control system" (P.343) or "Manually selectable regenerative braking intensity (if so equipped)" (P.348).

NOTE:
The regenerative brake converts the vehicle's forward motion to electric power to help slow the vehicle.

See "Driving the vehicle" (P.343).

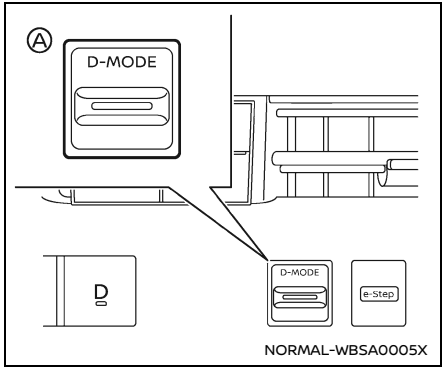

Use the Drive Mode Selector Ⓐ located on the instrument panel to select the ECO mode. Use the ECO mode for maximum driving range and for city driving. The ECO mode helps reduce power consumption by reducing acceleration when compared to the same accelerator pedal position in the STANDARD mode. See "ECO mode" (P.358).

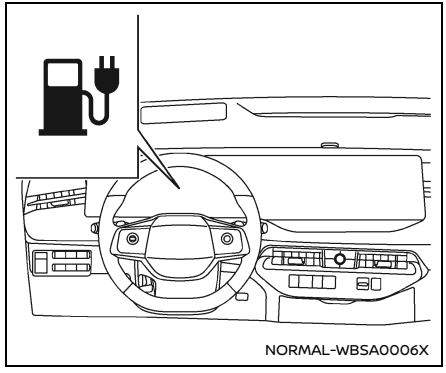

If the low battery charge warning light (yellow) illuminates, the Li-ion battery charge is too low for travel. See "Low battery charge warning light" (P.165). Charge the Li-ion battery as soon as possible.

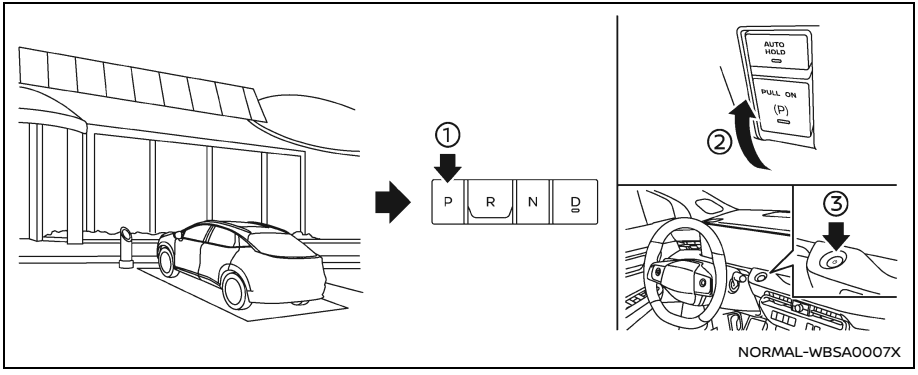

Parking the vehicle

1. When stopping the vehicle, push the shift button "P" ① to shift to the P (Park) position while depressing the brake pedal. Confirm that the vehicle is in the P (Park) position by checking the shift indicator on the shift button or on the vehicle information display.
2. Apply the parking brake ②.
3. Push the power switch ③ to the OFF position.
4. If a parking lot is equipped with charging facilities, charge the Li-ion battery as necessary. See "Types of charge and how to charge the Li-ion battery" (P.42).

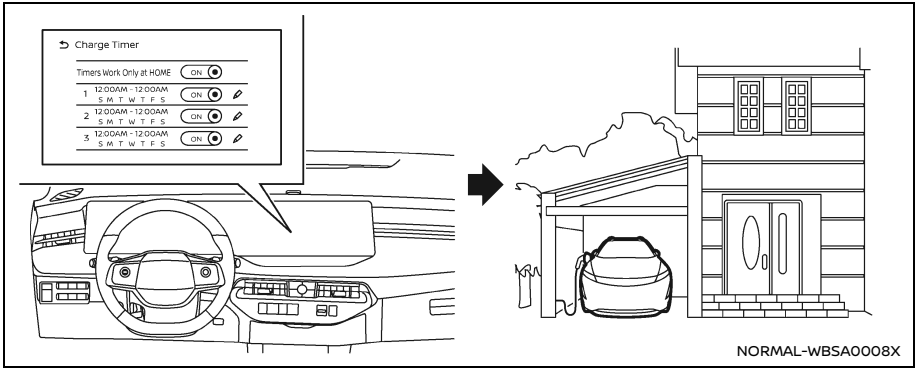

CHARGING AFTER DRIVING

Charging the Li-ion battery

When you return home, connect the vehicle to the charging station installed at your home using the normal charge connector.

Charge the vehicle or set the charge schedule function on the touch screen display to have the vehicle charge at a specific time. See "Charge schedule" (P.71).

1. When the power switch is turned off, the settings of the charge schedule and the Climate Schedule are displayed on the touch screen display.
2. Open the charge port lid and charge port cap. See "Charge port lid" (P.285).
3. Connect the charge connector to the vehicle.
4. When a charge schedule is turned on, charging starts at the set time. When a charge schedule is not turned on, charging starts immediately.

NOTE:

- **Charging can be started remotely, even if the charge schedule is set up.**
- **When you have forgotten to connect the charge connector at home, there is a function that can notify you via a text message capable cellular phone, internet enabled smart phone using MyNISSAN App (if so equipped). For additional information, see "Charging related remote function" (P.74).**
- **NISSAN recommends that you connect the normal charge cable to your vehicle when getting out of the vehicle, even if it is not going to be used. By doing this, you can get the most out of the Climate Schedule functions the next time you use the vehicle.**

VEHICLE TO LOAD (V2L) SYSTEM (if so equipped)

See "Vehicle to Load (V2L) system (if so equipped)" (P.233).

EFFICIENT USE OF YOUR VEHICLE

RANGE

The distance you can drive the vehicle (driving range) varies considerably depending upon available charge, weather, temperature, usage, battery age, topography, and driving style.

Refer to the Monroney label (window sticker) for the official EPA range. Your actual range will vary and could be significantly less, either initially or as the battery ages and with use over time. For additional information, see "Improve driving range" (P.31) for information on the factors that affect vehicle range and how to use the vehicle to maximize vehicle range.

IMPROVE DRIVING RANGE

The available driving range depends on a number of factors.

Actual driving range will vary depending upon:

- Speed,
- Vehicle load,
- Electrical load from vehicle accessories,
- Traffic and road conditions,
- Distance driven without stopping,
- Usage,
- Driving style,
- Battery age,
- Weather or temperature,
- Topography,
- Charging habits.

NISSAN recommends the following driving habits to help maximize driving range:

Before driving:

- Follow recommended scheduled maintenance.
- Keep tires inflated to the correct pressure.
- Keep wheels correctly aligned.
- Pre-heat or pre-cool the interior cabin while the vehicle is charging.
- Remove unnecessary cargo from the vehicle.

While driving:

- Drive in ECO mode
  - The ECO mode helps reduce power consumption by reducing acceleration when compared to the same accelerator pedal position in the STANDARD mode.
- Drive at a constant speed. Maintain cruising speeds with a constant accelerator pedal position or by using the cruise control system when appropriate.
- Accelerate slowly and smoothly. Gently depress and release the accelerator pedal for acceleration and deceleration.
- Drive at moderate speeds on the highway.
- Avoid frequent stopping and braking. Maintain a safe distance behind other vehicles.
- Turn off the climate control system when it is not needed.
- Select a moderate temperature setting for heating or cooling to help reduce power consumption.
- Use only the fan to help reduce power consumption.
- In cold weather, use the heated seats (if so equipped) and the heated steering wheel (if so equipped) as a substitute for climate control system to help reduce power consumption.
- Use the climate control system to control interior temperature and close windows to reduce drag when cruising at highway speed.
- Release the accelerator pedal to slow down and do not apply the brakes when traffic and road conditions allow.
  - This vehicle is equipped with a regenerative brake system. The primary purpose of the regenerative

brake system is to provide some power to recharge the Li-ion battery and extend driving range. A secondary benefit is the “engine braking” effect that operates based on Li-ion battery conditions. In the D (Drive) or B (if so equipped) position, when the accelerator is released, the regenerative brake system provides some deceleration and some power to the Li-ion battery.

- The vehicle driving range may be substantially reduced in extremely cold conditions (for example -4 °F (-20 °C)).
- Using the climate control system to heat the cabin when the outside temperature is below 32°F (0°C) uses more electricity and affects the vehicle driving range more than when using the heater when the temperature is above 32°F (0°C).

LI-ION BATTERY LIFE

The Li-ion battery's ability to hold a charge, like all batteries, decreases with battery age and usage which results in decreased driving range when compared to the driving range when the vehicle was new. This is normal and expected, and does not indicate a malfunction of the vehicle or Li-ion battery.

The Li-ion battery's ability to hold a charge can be affected by how you drive the vehicle, store the vehicle, how you charge the Li-ion battery and Li-ion battery temperature during vehicle operation and charging.

To maximize the battery's useful life, use the following driving and charging habits where possible.

- Avoid exposing a vehicle to extreme ambient temperatures for extended periods.
- Avoid storing a vehicle in temperatures below −13°F (−25°C) for over 7 days.
- Avoid leaving your vehicle for over 14 days where the Li-ion battery available charge gauge reaches a zero or near zero (state of charge).
- Allow the vehicle and Li-ion battery to cool down after use before charging.
- Park/store your vehicle in cool locations out of direct sunlight and away from heat sources.
- Avoid sustained high battery temperatures (caused, for example, by exposure to very high ambient temperatures or extending highway driving with multiple DC Fast Charges).
- Use the normal charging or trickle charging method to charge the Li-ion battery and minimize the use of public DC Fast Charger.
- Drive moderately.
- Use the ECO mode.
- Do not operate the charge schedule repeatedly while the charge connector is connected to the vehicle after the Li-ion battery charging is completed. Doing so may discharge the 12-volt battery.
- If the vehicle will not be used for an extended period of time, charge the Li-ion battery once every 3 months.
- The power of the Li-ion battery can be checked on the Li-ion battery available charge gauge. See "Li-ion battery available charge gauge" (P.156).

LI-ION BATTERY MAINTENANCE

In addition to the regular maintenance recommended by NISSAN, the LEAF requires some special Li-ion battery inspections.

- For additional information, refer to the NISSAN Warranty Information Booklet for significant limitations, exclusions and possible voiding of your warranty resulting from failure to have these necessary inspections, repairs and/or adjustments performed.

- For a detailed explanation of the Li-ion battery inspection and intervals, see “EV maintenance schedules". (See "Maintenance schedules" (P.546).)

EV (Electric Vehicle) UNIQUE INFORMATION

METERS AND INDICATORS

Basic information

Various meters, gauges and indicators related to the EV (Electric Vehicle) functions are displayed in the vehicle information display.

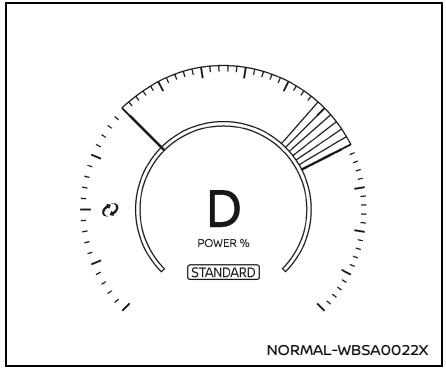

Vehicle information display

Power meter:

This meter displays the actual traction motor power consumption and the regenerative brake power provided to the Li-ion battery.

For additional information, see "Power meter" (P.155).

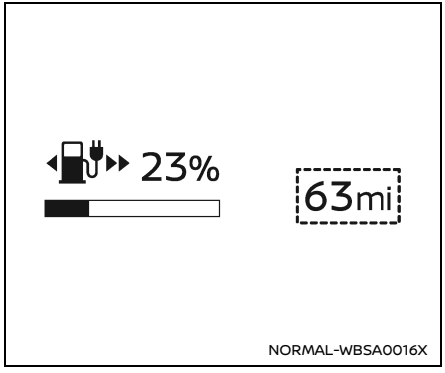

Estimated driving range:

This indicator displays the estimated driving range (calculated based on a program that accounts for current driving style and operational conditions) that can be driven before recharging is necessary.

For additional information, see "Estimated driving range" (P.157).

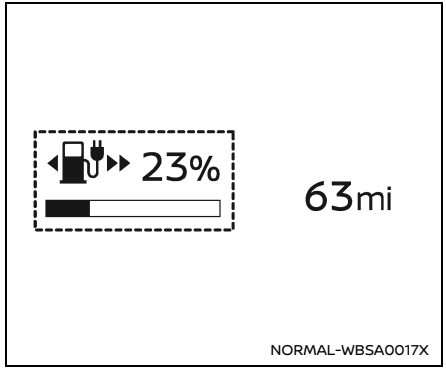

Li-ion battery available charge gauge:

This indicator displays the available Li-ion battery power remaining to drive the vehicle.

For additional information, see "Li-ion battery available charge gauge" (P.156).

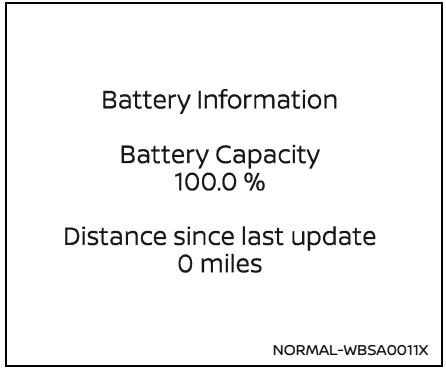

Battery Information:

The digits (%) displays the available capacity of the Li-ion battery remaining to store power.

To check the battery capacity, select it in the trip computer menu. For additional information, see "Battery Information" (P.199).

Other information:

The other EV unique information is displayed on the trip computer as well. For additional information, see "Trip computer" (P.194).

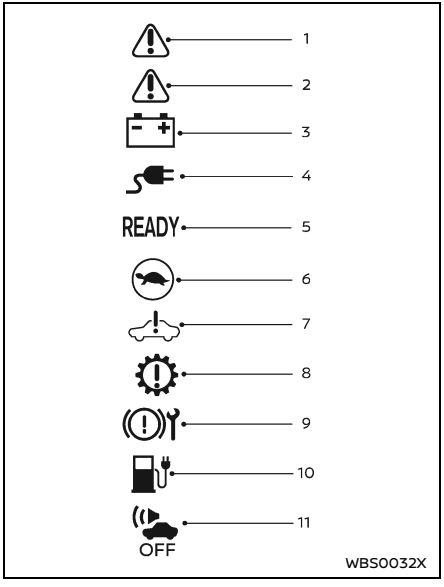

Warning and indicator lights

The EV system uses the following EV specific warning and indicator lights, located in the meter panel.

1. Master warning light (red)
2. Master warning light (yellow)
3. 12-volt battery charge warning light
4. Plug in indicator light
5. READY to drive indicator light
6. Power limitation indicator light
7. EV system warning light
8. Electric shift control system warning light
9. Brake system warning light (yellow)
10. Low battery charge warning light
11. Approaching Vehicle Sound for Pedestrians (VSP) system off indicator light

For additional information, see "Warning lights, indicator lights and audible reminders" (P.159).

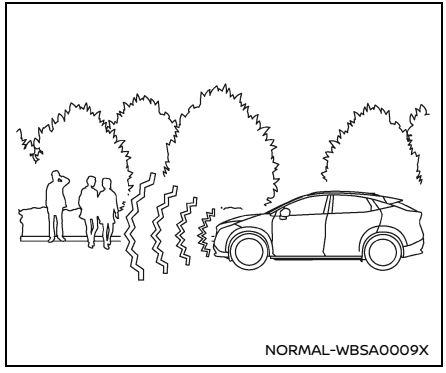

APPROACHING VEHICLE SOUND FOR PEDESTRIANS (VSP) SYSTEM

The Approaching Vehicle Sound for Pedestrians (VSP) system is a function that uses sound to alert pedestrians of the presence of the vehicle when it is being driven at a low speed.

When the power switch is in the READY to drive position, and the shift position is in D (Drive), N (Neutral) or R (Reverse), it produces a sound.

The sound stops when the vehicle speed is more than approximately 25 MPH (40 km/h) while accelerating.

The sound starts when the vehicle speed is less than approximately 22 MPH (35

km/h) while decelerating.

WARNING

- **If the sound from the VSP system is not heard while driving, stop the vehicle in a safe and quiet location. Open a window and then place the vehicle in the R (Reverse) position with the brake pedal firmly depressed. Check that the operating sound can be heard from the front of the vehicle.**
- **If the sound cannot be heard when the VSP system is operational, or the VSP OFF indicator light is illuminated, it is recommended that you visit a NISSAN certified LEAF dealer immediately for inspection.**

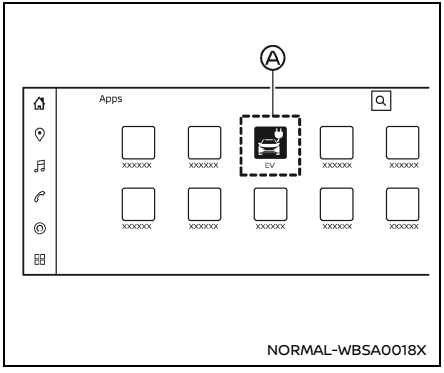

Example

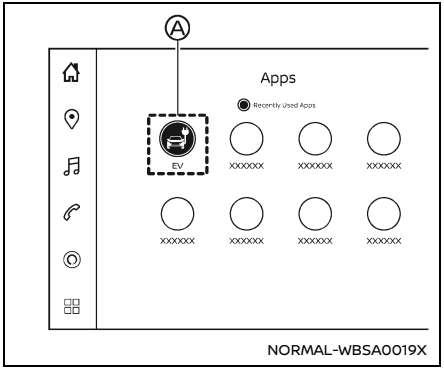

Example

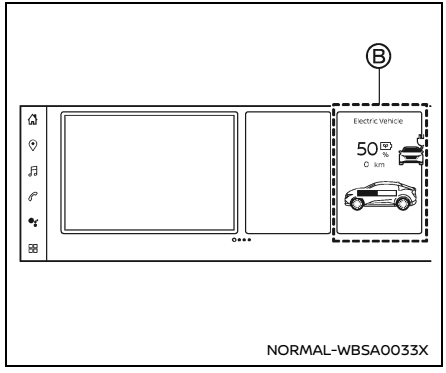

Example

ELECTRIC VEHICLE SCREEN

Basic information

In the Electric Vehicle screen, you can easily access the EV related functions, services or informations. The Electric Vehicle screen can be displayed on the touch screen display.

How to show the Electric Vehicle screen:

1. Touch the " ⌂ " key on the Launch bar.
2. Touch the " ⊞ " key and then touch "EV" icon Ⓐ.

or,

1. Touch the " ⌂ " key on the Launch bar.
2. Swipe the widgets on the screen and touch "Electric Vehicle" widget Ⓑ.

See the separate NissanConnect® Owner's Manual for information on how to customize your home menu screen.

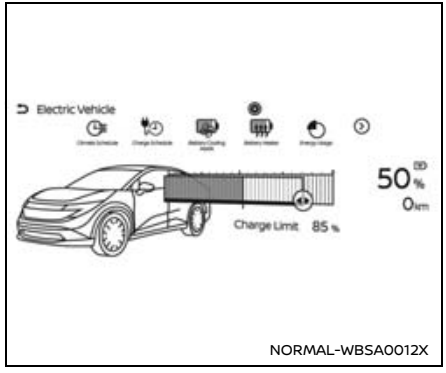

Example

The Electric Vehicle screen allows you to use the following features:

Available items may vary depending on models, specifications, software versions and conditions.

- State of charge gauge, driving range, charge remaining time (while-charging)
- Charge Limit (%)
- Climate Schedule
- Charge Schedule
- Battery Cooling Assist
- Battery Heater
- Energy Usage
- Battery Temperature Management Status
- Charging Stations
- Plug-in Reminder
- Amperage Limit

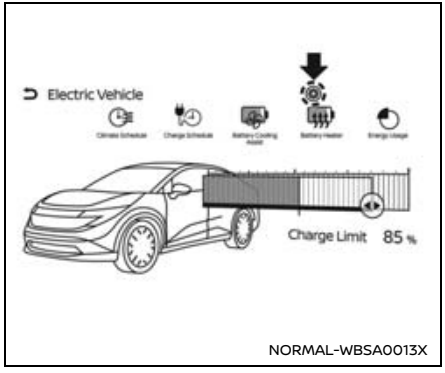

Example

EV Notifications settings

Touch the " ⚙ " key (on top of the Electric Vehicle screen) to display the EV Notifications settings.

The EV Notifications settings allow you to use the following items:

Available setting items may vary depending on models, specifications, software versions and conditions.

- Notifications
- Charge Limit
- Charge Schedule
- Climate Schedule
- Low Battery temperature
- Battery Temperature Management
- Low Battery

CH Charging

Precautions on charging 40
Types of charge and how to charge the Li-ion battery 42
- Basic information 42
- How to normal charge (AC 220–240 volt) by charging device 47
- How to trickle charge (AC 110–120 volt) by L1 & L2 EVSE (if so equipped) 49
- How to normal charge (AC 220–240 volt) by L1 & L2 EVSE (if so equipped) 56
- Charge connector lock 65
- How to DC Fast Charge 67

Charging methods 71
- Charge limit 71
- Amperage limit 71
- Charge schedule 71
- Charging related remote function 74

Charging related indicator lights 75
- Charging status indicator light 75
- NISSAN EVSE (Electric Vehicle Supply Equipment) control box indicator light (if so equipped) 76

Charging troubleshooting guide 79

PRECAUTIONS ON CHARGING

⚠ WARNING

- **If you use any medical electric devices, such as an implantable cardiac pacemaker or an implantable cardiovascular defibrillator, check with the electric medical device manufacturer concerning the effects that charging may have on implanted devices before starting the charge operation. Charging may affect the operation.**
- **Make sure there is no water or foreign material in the charge port, charge connector or electrical plug, and that they are not damaged or affected by rust or corrosion. If any of these conditions are noticeable, do not charge the Li-ion battery. This may result in a short circuit or electric shock and could cause a fire which may result in serious personal injury or death.**
- **To avoid serious personal injury or death when the Li-ion battery is charging, be aware of the following precautions:**
  - **Do not touch the metal contacts of the charge port, charge connector, electrical plug or Genuine NISSAN exchangeable plug.**
  - **Do not touch the vehicle and the EVSE (Electric Vehicle Supply Equipment) (if so equipped) when there is lightning. This may cause an electrical shock.**
  - **Do not pull, twist, bend, step on, or drag the cable.**
- **Make sure the charge connector is removed from the charge port before starting your vehicle. If the charge connector is only partially engaged and the connector latch is unlocked, it is possible to place the EV in the READY to drive position.**
- **Do not touch the plug or the Genuine NISSAN exchangeable plug if they are wet or with wet hands. Do not put the plug or the Genuine NISSAN exchangeable plug in water, liquid or snow. This may cause an electric shock which may result in serious personal injury or death.**
- **Do not disassemble or modify the charge port, the EVSE (if so equipped) or the Genuine NISSAN exchangeable plug. This may cause a fire or an electric shock which may result in serious personal injury or death.**
- **If you notice an unusual odor, smoke or abnormal noises coming from the vehicle, stop charging immediately.**
- **Be careful not to allow your hands, hair, jewelry or clothing to come into contact with, or get caught in the cooling fan. The cooling fan can start at any time during charging.**
- **It is recommended that you do not use extension cords or adapters unless they are Genuine NISSAN parts or equivalent.**
- **Do not use the Genuine NISSAN exchangeable plug with any devices except the Genuine NISSAN EVSE.**
- **Do not allow an unattended child to handle or use this product.**
- **Use the EVSE with outlet and wiring installed according to the regulations/standards.**

- For model with EVSE, after using your EVSE and if you place it in the vehicle, secure it firmly with the storage in the luggage compartment. See "How to trickle charge (AC 110–120 volt) by L1 & L2 EVSE (if so equipped)" (P.49) and "How to normal charge (AC 220–240 volt) by L1 & L2 EVSE (if so equipped)" (P.56). Otherwise, it may become a projectile and cause a personal injury during sudden braking or in a collision.
- NISSAN highly recommends you charge your EV at home using a NISSAN recommended dedicated domestic charging station. A SAE J1772–compliant domestic charging station needs to be installed on a dedicated 208-240 V circuit by a professional electrician.

CAUTION

- To prevent damage to the charging equipment:
  - Do not close the charge port lid without closing the charge port cap.
  - Do not subject the charging equipment to impact.
  - Do not pull or twist the charge cable.
- Make sure to close the charge port lid with the charge port cap closed when charging is finished. If the charge port lid is closed when the charge port cap is open, water or foreign materials may enter the charge port.
- Do not charge when a vehicle body cover is in use. This may cause damage to the charge connector.
- Do not attempt to perform a jump start on the 12-volt battery at the same time when the Li-ion battery is being charged. Doing so may damage the vehicle or charging equipment and could cause an injury. See "Jump starting" (P.497).
- Do not insert any object other than the charge connector into the charge port. Doing so may cause damage to the charge port.
- In normal charging (AC 220 - 240 volt) and trickle charging (AC 110 - 120 volt) using the EVSE (Electric Vehicle Supply Equipment) provided with the vehicle, NISSAN recommends using an AC 220 - 240 volt, 50A and an AC 110- 120 volt, 15A dedicated electrical circuit and outlet. The dedicated circuit is used to help prevent circuit damage or the circuit breaker from tripping due to the high draw of charging the Li-ion battery. If the dedicated circuit is not used, the circuit may cause adverse interference on MCB (Moulded Circuit Board) and household electrical appliances such as televisions and audio systems. If the circuit is shared, and another electrical device is being used at the same time the vehicle is charging, the breaker may trip. A qualified electrician should install a dedicated circuit if one is not already available.

NOTE:

- It may take more time to charge the Li-ion battery using the DC Fast Charger if the vehicle is parked in a cold location for a long time. It may

take more time to charge the Li-ion battery using the DC Fast Charger if the temperature of the Li-ion battery is high or low.

- **If the vehicle will not be used for an extended period of time, charge the Li-ion battery once every 3 months.**
- **The power switch can be placed in the ON position and the climate control can be used while the Li-ion battery is charging. However, because these operations consume Li-ion battery power, it will take longer for the Li-ion battery to become charged to the limit. Place the power switch in the OFF position to help reduce Li-ion battery charge time.**
- **If electrical power is interrupted while charging, charging restarts automatically when the electrical power is restored.**
- **It is recommended to keep the charge cable connected to save Li-ion battery power, when the heater and air conditioner are operating with remote operation (when not waiting for the charge schedule).**
- **If the charge port is frozen, melt the ice. After the ice has melted, charge the Li-ion battery. Forcing the charge connector to connect may cause a malfunction.**
- **If foreign materials have entered the charge connector or charge port and it is not possible to connect it, do not attempt to force the connection. It is recommended that you visit a NISSAN certified LEAF dealer. Forcing the charge connector to connect may cause damage to the charging equipment and vehicle.**
- **There is a hole on the charge port for water drainage. If the water drainage hole becomes blocked, or if water gets trapped inside the charge port, do not charge. It is recommended that you visit a NISSAN certified LEAF dealer.**
- **The cooling fan and water pump may start running during charging. This is not a malfunction.**

TYPES OF CHARGE AND HOW TO CHARGE THE LI-ION BATTERY

BASIC INFORMATION

Your vehicle is equipped with the L1 & L2 EVSE (Electric Vehicle Supply Equipment) (if so equipped).

Type of charging	Charge port	Charge connector	Control box	Power	Instructions
AC Level 2: Normal charge (AC 220–240 volt)	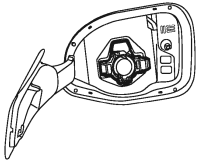	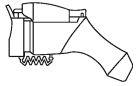 Normal charge connector			Use the charging device (AC 220-240 volt) that is installed in your home.
	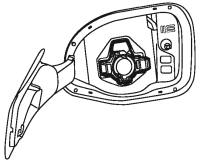	Normal charge connector	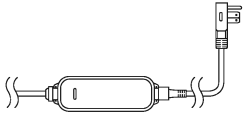 Domestic plug	Electrical outlet	Use the L1 & L2 EVSE. Use only a 220-240 volt, 50 amp, dedicated outlet installed by a qualified electrician.

NORMAL-WBTA0002X

Type of charging	Charge port	Charge connector	Control box	Power	Instructions
AC Level 1: Trickle charge (AC 110–120 volt)	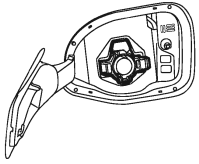	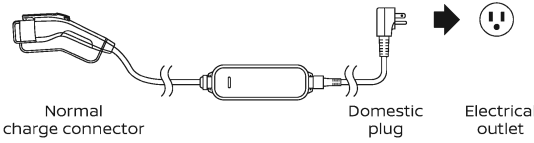			Use the L1&L2-EVSE. Use only a 110-120 volt, 15 amp, dedicated outlet installed by a qualified electrician.

NORMAL-WBTA0033X

This vehicle is an electric vehicle and it requires electricity to operate. The Li-ion battery is the only source of power to operate the vehicle.

It is important to conserve power and plan your charging needs when you drive to avoid completely discharging the Li-ion battery.

There are the following methods of charging the Li-ion battery:

- AC Level 2: Normal charge
- AC Level 1: Trickle charge
- DC Level 3: DC Fast Charge

The time to completely charge the vehicle Li-ion battery varies based on the state of charge of the Li-ion battery, condition and age of the Li-ion battery, temperature of the Li-ion battery, ambient temperature and condition of the power source connected to the vehicle, and whether the electric equipment (such as the air conditioner, which consumes electric power) is used.

AC Level 2: Normal charge

NISSAN recommends using normal charging for usual charging of the vehicle. Use of DC Fast Charge should be minimized in order to help prolong Li-ion battery life.

Normal charging uses L1 & L2 EVSE (Electric Vehicle Supply Equipment), or an SAE J1772 compliant charging device connected to a dedicated AC 220 - 240 volt circuit. L1 & L2 EVSE is provided with the vehicle (if so equipped). The charging device is a home charging dock installed in your home by a qualified electrician. It is recommended that you visit a NISSAN certified LEAF dealer. For additional information, see "How to normal charge (AC 220–240 volt) by charging device" (P.47) or "How to normal charge (AC 220–240 volt) by L1 & L2 EVSE (if so equipped)" (P.56).

AC Level 1: Trickle charge

Trickle charging is not recommended for regular use because it takes more time than normal charging. Trickle charge can

be used when it is necessary to perform an emergency charge at a destination such as a friend's house.

Trickle charge uses the EVSE (Electric Vehicle Supply Equipment) provided with the vehicle to connect the vehicle to an AC 110–120 volt, 15A dedicated outlet. The outlet should be protected by a circuit breaker to avoid overloading the circuit or other electrical hazard.

For additional information, see "How to trickle charge (AC 110–120 volt) by L1 & L2 EVSE (if so equipped)" (P.49).

Type of charging	Charge port	Charge connector	Control box	Power	Instructions
DC Level 3: Quick Charge ONLY Not compatible with NACS Level 1/2 charging.	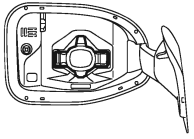	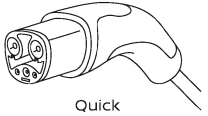 Quick charge connector		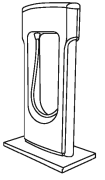	Public charging stations

NORMAL-WBTA0028X

DC Level 3: DC Fast Charge

A vehicle equipped with a DC Fast Charge port is compatible with the NACS (J3400) connectors on charging stations. Charging stations are UL certified and safe to use in the US.

DC Fast Charging is possible (even several times a day). If the battery temperature is hot, in order to protect the battery, power of the DC Fast Charging will be limited.

Public charging:

This vehicle is compatible with any public charging station that is SAE J3400 compliant. If you attempt to charge from a noncompliant charging station, you may not receive a complete charge, or you may not be able to charge at all due to hardware and software differences. NISSAN is working with states, municipalities, utility companies and others to assist in the preparation of markets and infrastructure. However, NISSAN makes no representations that public charging stations will be available in locations where you wish to operate the vehicle, nor can NISSAN predict the period of time it may take for public charging infrastructure to be developed in your area. Depending on where you live or drive, there may not be sufficient public charging stations available to meet your particular needs for driving range and charging away from your home. Trip planning is therefore important, and you should plan trips with these facts in mind.

Even when charging the Li-ion battery using a charger capable of more than the vehicle's maximum charging power, the maximum power from the charger will be limited to the vehicle's maximum charging power, it will be changed based on the vehicle status.

During charging the power limit to the vehicle may change depending on the capacity of the Li-ion battery. This is normal and does not indicate a malfunction.

The time needed to charge the Li-ion battery using the DC Fast Charger depends

on many factors including the Li-ion battery temperature and the type of DC Fast Charger used.

It may take more time to charge the Li-ion battery using the DC Fast Charger if the vehicle is parked in a cold location for a long time.

It may take more time to charge the Li-ion battery using the DC Fast Charger if the temperature of the Li-ion battery is high or low.

NOTE:
If the outside temperature is low and a low temperature alert [❄] is displayed in the vehicle information display, it is recommended to turn ON "Battery Heater" 30 minutes to 1 hour before arriving at a DC Fast Charge station.

Power limitation mode

This mode protects the health and operation of the vehicle's Li-ion battery. This mode operates in certain extreme conditions (heat, cold, low state of charge). Power available to vehicle systems, including its traction motor, is limited resulting in limited performance, acceleration and top speed. Charging may be automatically terminated, especially with repeated DC Fast Charging in extreme hot weather.

Checking Li-ion battery charge

The three methods for checking the amount of charge are as follows:

- Check by using the Li-ion battery available charge gauge on the vehicle information display when the power switch is placed in the ON position. For additional information, see "Li-ion battery available charge gauge" (P.156) and "Low battery charge warning light" (P.165).
- Check by using an internet enabled smart phone using MyNISSAN App (if so equipped). For additional information, please visit www.nissanusa.com/connect/.
- Check by using the charging status indicator light. For additional information, see "Charging status indicator light" (P.75).
- Check by using the Electric Vehicle screen. For additional information, see "Electric Vehicle screen" (P.36).

NOTE:
- **During the charge operation, charge continues when the power switch is placed in the ON position.**
- **For safety reasons, it is not possible to switch to the READY to drive position while a charge connector is connected.**
- **During charging, it is possible that the radio may be inaudible due to noise by the electromagnetic wave.**

HOW TO NORMAL CHARGE (AC 220–240 volt) BY CHARGING DEVICE

⚠ WARNING

- **If you use any medical electric devices, such as an implantable cardiac pacemaker or an implantable cardiovascular defibrillator, check with the electric medical device manufacturer concerning the effects that charging may have on implanted devices before starting the charge operation. Charging may affect the operation.**
- **Be sure to follow the precautions for using the charging device that can be installed in your home. Failing to do so could result in serious injury or death.**

⚠ CAUTION

Do not use any charging equipment that is not compatible with the LEAF. Doing so could prevent the Li-ion battery from charging properly or could result in damage to the vehicle or Li-ion battery.

- Normal charge uses the charging device (AC 220 - 240 volt, 16A or 32A) that can be installed in your home to charge the Li-ion battery.
- Immediate charge, charge schedule and remote charge can be performed in the normal charge mode. For additional information, see "Charging methods" (P.71).
- The charging equipment communicates with the vehicle before Li-ion battery charging starts. If this communication does not occur because other equipment is used, the Li-ion battery will not charge.
- NISSAN recommends that you connect the charging device when getting out of the vehicle, even if it is not going to be used. By doing this, you can get the most out of the remote climate control and Climate Schedule functions the next time you use the vehicle.

To start normal charge:

1. Push the P (Park) position switch to place the vehicle in the P (Park) position and apply the parking brake.
2. When charging the Li-ion battery, place the power switch in the OFF position.
3. Open the Normal Charge Port (J1772) lid and cap on the driver side of vehicle. For additional information, see "Charge port lid" (P.285) and "Charge port cap" (P.286).

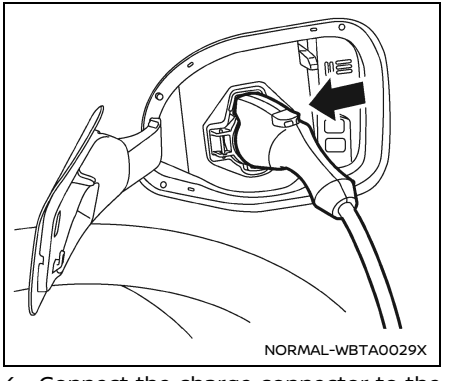

4. Connect the charge connector to the charge port. If it is connected normally, a beep will sound once.
5. If charging has started, a beep will sound twice and the charging status indicator light will operate. For additional information, see "Charging status indicator light" (P.75).

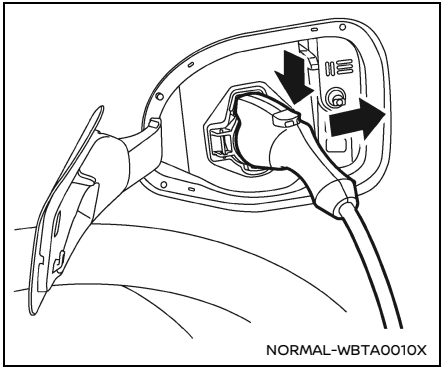

To stop normal charge:

1. Ensure that the charge connector lock is not engaged. For additional information, see "Charge connector lock" (P.65).
2. Press the button on the charge connector, release the lock and remove the charge connector from the charge port and properly store it.

NOTE:

When connecting or removing the charge connector, the charge port light will illuminate for approximately 30 seconds. (See "Charge port light" (P.287).)

When you walk away from the vehicle with the Intelligent Key, the charge port light will go off.

3. Close the charge port cap
4. After closing the charge port cap on the charge port, close the charge port lid.

NOTE:

To stop charging mid-charge, remove the charge connector. Charging automatically stops.

HOW TO TRICKLE CHARGE (AC 110–120 volt) BY L1 & L2 EVSE (if so equipped)

⚠ WARNING

- **If you wear a pacemaker or an implantable cardiovascular defibrillator (ICD), stay at least 6 in (15 cm) away from the EVSE.**
- **If you use any medical electric devices, such as an implantable cardiac pacemaker or an Implantable Cardiovascular Defibrillator (ICD), check with the electric medical device manufacturer concerning the effects that charging may have on implanted devices before starting the charge operation. Charging may affect the operation.**
- **In order to avoid an electric shock or fire due to a short circuit, connect to a GFI (Ground Fault Interrupter) circuit breaker and use a water proof electrical ground socket.**
- **Discontinue EVSE use immediately if plug or outlet becomes hot to the touch or if you notice any unusual odors.**
- **Never use extension cords.**
- **Never use plug adapters other than the Genuine NISSAN exchangeable plug for EVSE.**
- **Always unplug the EVSE when not in use.**

- **The Genuine NISSAN L1 & L2 EVSE draws 12 amps continuously while charging the Li-ion battery with AC 110–120 volt outlet. Do not plug in to any electrical circuit unless it is inspected by a qualified electrician to confirm that the electrical circuit can accept a 12 amp draw. Any electrical circuit has a much higher likelihood of being compromised in the following conditions listed below.**
  - **Improper use of the EVSE may result in a fire and serious injury or death.**
  - **Do not use the EVSE in structures more than 40 years old.**
  - **Do not use the EVSE in structures using fuse-based circuit protection. Use only with electrical circuits protected by circuit breakers.**
  - **Do not use the EVSE on electrical circuits with two-prong outlets.**
  - **Do not use the EVSE if other devices are plugged into the same circuit.**
  - **When unplugging, be sure to pull by the plug or the Genuine NISSAN exchangeable plug, not the cord.**
  - **Do not pull, twist, bend, step on or drag the cable.**
  - **Do not attach or detach the Genuine NISSAN exchangeable plug while the exchangeable plug is inserted into an outlet.**
  - **Do not use the Genuine NISSAN exchangeable plug if the plug is not fully inserted and not locked.**
  - **Do not use the EVSE, Genuine NISSAN exchangeable plug if the cable or cord is frayed, has broken insulation, or shows any other indications of damage.**
  - **Stop using the EVSE, Genuine NISSAN exchangeable plug immediately if charging stops before completion when you move the Genuine NISSAN exchangeable plug, the plug or the cord.**
  - **Do not use the EVSE or Genuine NISSAN exchangeable plug if the control box, plug, Genuine NISSAN exchangeable plug or charge connector is broken, cracked, open, corroded or shows any other indications of damage.**
  - **Do not use the EVSE or Genuine NISSAN exchangeable plug if the plug or Genuine NISSAN exchangeable plug has a loose connection with the outlet or if the outlet is damaged or rusted.**
  - **Before connecting the EVSE, be sure to check the rated current shown on the EVSE to ensure that the outlet and circuit have enough current capacity to charge your vehicle safely. If the capacity of the outlet and circuit is not enough, wiring may cause overheating or a fire.**
  - **If in any doubt about the outlet and circuit, consult a qualified electrician.**
  - **The device has parts that may spark inside. Do not use it where gasoline, paint, or flammable liquids are used or stored.**

- **Do not use if a malfunction occurs or if the EVSE or Genuine NISSAN exchangeable plug has been damaged in any manner. It is recommended that you visit a NISSAN certified LEAF dealer for replacement.**
- **The EVSE or Genuine NISSAN exchangeable plug contains no user serviceable parts. Do not attempt to repair the EVSE or Genuine NISSAN exchangeable plug, doing so will void your warranty.**

CAUTION

- **Only charge using a standard AC 110 - 120 volt, 15A dedicated electrical outlet (for example, do not use an electric generator). Failure to do so may cause charging to fail and could cause damage to the vehicle or the EVSE due to power surges.**
- **NISSAN recommends using Genuine NISSAN charging equipment to charge the vehicle. Using non- NISSAN equipment could cause the Li-ion battery to not charge correctly and may damage the vehicle.**

Precautions on storage

- Do not store the EVSE or Genuine NISSAN exchangeable plug in a place exposed to direct sunlight.
- Do not store the EVSE or Genuine NISSAN exchangeable plug in a place exposed to wind or rain.
- Be sure to store the EVSE with the cap on to keep the terminal of the charge connector away from dirt and dust.
- Do not store the EVSE with the cable and/or cord wound around the control box.
- Do not store the EVSE in a condition in which the cable and/or cord are twisted.
- The control box will become hot while the EVSE is charging. This is not a malfunction.

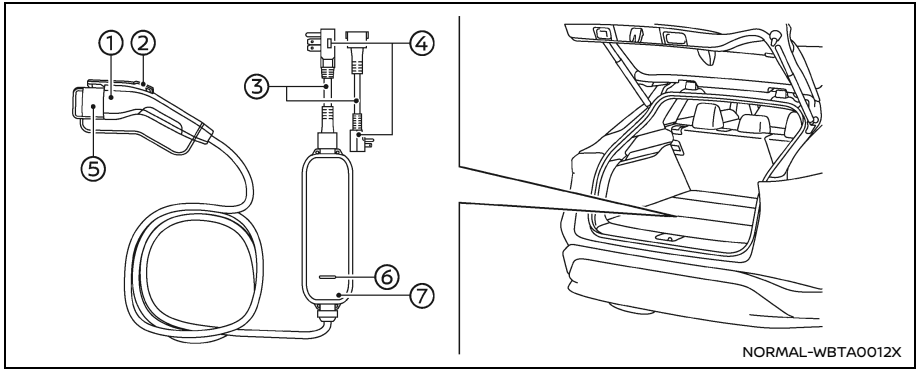

① Charge Connector
② Release Button
③ Genuine NISSAN exchangeable plug
④ Plug
⑤ Cap
⑥ Indicator light
⑦ Control box

To start trickle charging:

NOTE:
Charge schedule, remote charge and immediate charge can be performed in the trickle charge mode. For additional information, see "Charging methods" (P.71).

1. Push the P (Park) position switch to place the vehicle in the P (Park) position and apply the parking brake.
2. When charging the Li-ion battery, place the power switch in the OFF position.
3. Open the Normal Charge Port (J1772) lid and cap on the driver side of vehicle. For additional information, see "Charge port lid" (P.285).
4. Take out the EVSE from the luggage compartment.

   When your vehicle is equipped with the exchangeable plug, connect the exchangeable plug for AC 120 volt to the control box.

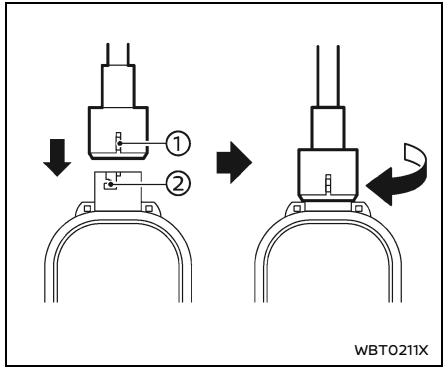

   To connect the exchangeable plug to the control box:

   Align the mark of the plug ① with the mark of the control box ② as shown in the illustration.

   Insert the plug into the control box.

   Rotate it until a click sounds.

   Pull the cable to ensure if it is securely connected.

   To remove the exchangeable plug from the control box:

   Rotate the plug of the exchangeable plug backward.

5. Connect the electrical plug to the AC 110 - 120 volt, 15A dedicated electrical

outlet. If it is connected normally, the green light on the EVSE control box indicator light illuminates.

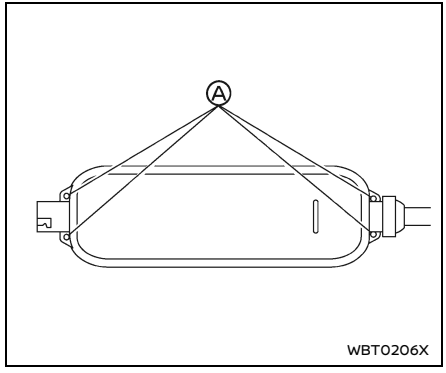

NOTE:

You can pass a cord through the holes Ⓐ in the control box in order to hang it up while the Li-ion battery is charging. Use the EVSE with the plug in an upright position (the cord should extend down from the outlet).

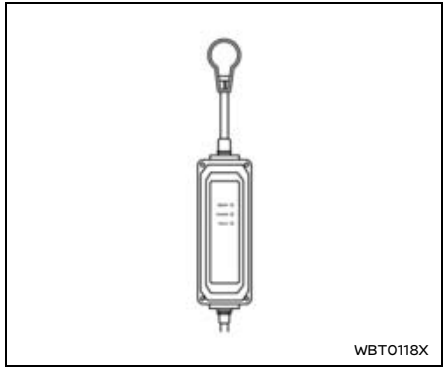

Example

6. Open the charge port cap. For additional information, see "Charge port cap" (P.286).

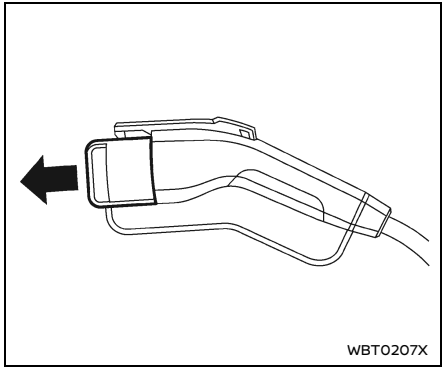

7. Remove the cap from the charge connector.

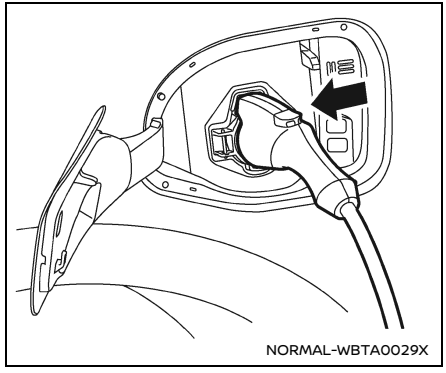

Example

8. Connect the charge connector to the charge port. If it is connected normally, a beep will sound once.
9. If charging has started, or if the Li-ion battery is waiting for the charge schedule, a beep will sound twice and the charging status indicator light will operate. For additional information, see "Charging status indicator light" (P.75).

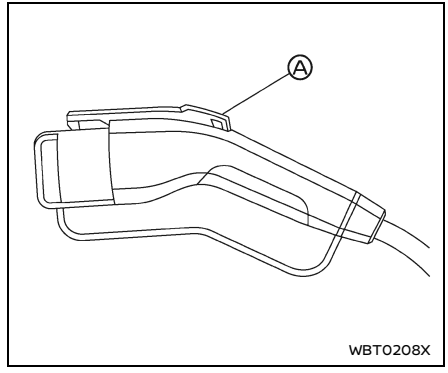

10. When recharging outside, such as in your driveway, use a commercially available padlock attached in position Ⓐ to prevent theft.

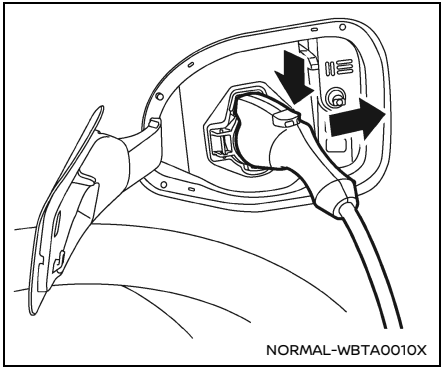

Example

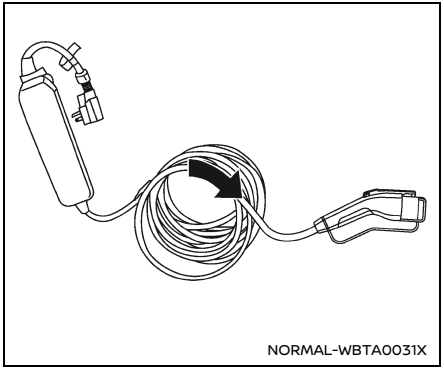

Example

To stop trickle charge:

1. Ensure that the charge connector lock is not engaged. For additional information, see "Charge connector lock" (P.65).
2. Press the button on the charge connector, release the lock and remove the charge connector from the charge port.

NOTE:

When connecting or removing the charge connector, the charge port light will illuminate for approximately 30 seconds. (See "Charge port light" (P.287).)

When you walk away from the vehicle with the Intelligent Key, the charge port light will go off.

3. Attach the cap to the EVSE.
4. Remove the electrical plug from the electrical outlet.

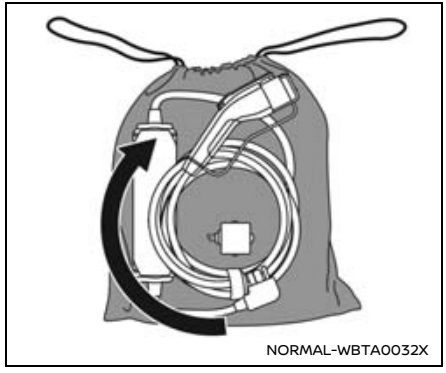

Example

5. Store in its case.

NOTE:

Perform the following procedure to store the EVSE in the case:

1. Wind the charge cable into a size that will allow it to be stored in the case (approximately 12 in (30 cm) in diameter). Winding the charge cable in the direction shown above avoids shortening of cable life.
2. Place the EVSE into the case.
3. Store the case in the luggage compartment.
4. After closing the cap on the charge port, close the charge port lid.

NOTE:
To stop charging mid-charge, remove the charge connector. Charging automatically stops.

HOW TO NORMAL CHARGE (AC 220–240 volt) BY L1 & L2 EVSE (if so equipped)

⚠ WARNING

Please be sure to follow the warnings below. Failure to do so may result in serious injury or death.

- **If you wear a pacemaker or an implantable cardiovascular defibrillator (ICD), stay at least 6 in (15 cm) away from the EVSE.**
- **If you use a pacemaker or an Implantable Cardiovascular Defibrillator (ICD), check with the electric medical device manufacturer concerning the effects that charging may have on implanted devices before starting the charge operation. Charging may affect the operation.**
- **In order to avoid an electric shock or fire due to a short circuit, connect to a GFI (Ground Fault Interrupter) circuit breaker and use a water proof electrical ground socket.**
- **Discontinue EVSE use immediately if plug or outlet becomes hot to the touch or if you notice any unusual odors.**
- **Never use extension cords or plug adapters with EVSE.**
- **Never use plug adapters other than the Genuine NISSAN exchangeable plug for EVSE.**
- **Always unplug the EVSE when not in use.**
- **The Genuine NISSAN L1 & L2 EVSE draws 30 amps continuously while charging the Li-ion battery with AC 220–240 volt outlet. Do not plug in to any electrical circuit unless it is inspected by a qualified electrician to confirm that the electrical circuit can accept a 30 amp draw. Any electrical circuit has a much higher likelihood of being compromised in the following conditions listed below.**
  - **Improper use of the EVSE may result in a fire and serious injury or death.**
  - **Do not use the EVSE in structures more than 40 years old.**
  - **Do not use the EVSE in structures using fuse-based circuit protection. Use only with electrical circuits protected by circuit breakers.**
  - **Do not use the EVSE on electrical circuits with two-prong outlets.**
  - **Do not use the EVSE if other devices are plugged into the same circuit.**
  - **When unplugging, be sure to pull by the plug and not the cord.**
  - **Do not pull, twist, bend, step on or drag the cable.**
  - **Do not use the EVSE if the cable or cord is frayed, has broken insulation, or shows any other indications of damage.**
  - **Stop using the EVSE immediately if charging stops before completion when you move the plug or the cord.**

- **Do not use the EVSE if the control box, plug, the EVSE or charge connector is broken, cracked, open, corroded or shows any other indications of damage.**
- **Do not use the EVSE if the plug has a loose connection with the outlet or if the outlet is damaged or rusted.**
- **Before you connect the EVSE, be sure to check the rated current shown on the EVSE to ensure that the outlet and circuit have enough current capacity to charge your vehicle safely. If the capacity of the outlet and circuit is not enough, wiring may cause overheating or a fire.**
- **If in any doubt about the outlet and circuit, consult a qualified electrician.**
- **The EVSE has parts that may spark inside. Do not use it where gasoline, paint, or flammable liquids are used or stored.**
- **Do not use if a malfunction occurs or if the EVSE has been damaged in any manner. It is recommended that you visit a NISSAN certified LEAF dealer for replacement.**
- **The EVSE contains no user serviceable parts. Do not attempt to repair the EVSE, doing so will void your warranty.**

⚠ CAUTION

- **Only charge using a standard AC 220 - 240 volt, 50A dedicated electrical outlet (for example, do not use an electric generator). Failure to do so may cause charging to fail and could cause damage to the vehicle or the EVSE due to power surges.**
- **NISSAN recommends using Genuine NISSAN charging equipment to charge the vehicle. Using non- NISSAN equipment could cause the Li-ion battery to not charge correctly and may damage the vehicle or the EVSE.**

Precautions on storage

- Do not store the EVSE in a place exposed to direct sunlight.
- Do not store the EVSE in a place exposed to wind or rain.
- Be sure to store the EVSE with the cap on to keep the terminal of the charge connector away from dirt and dust.
- Do not store the EVSE with the cable and/or cord wound around the control box.
- Do not store the EVSE in a condition in which the cable and/or cord are twisted.
- The control box will become hot while the EVSE is charging. This is not a malfunction.
- Normal charge (AC 220–240 volt) by L1 & L2 EVSE is performed using an AC 220 — 240 volt, 50A dedicated electrical outlet using the L1 & L2 EVSE provided with the vehicle.

Description	NEMA No.	Amperes	Outlet	Plug
3-POLE 4-WIRE GROUNDING	14	50A	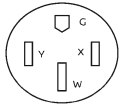 14-50R	 14-50P

WBT0134X

NEMA 14–50 outlet and plug

- 120V/240V EVSE (L1/L2) plug must be connected to a NEMA 14–50 outlet that is connected to a single phase power supply obtained from a delta connection.
- If connected to another type of power supply, EVSE will not work normally.

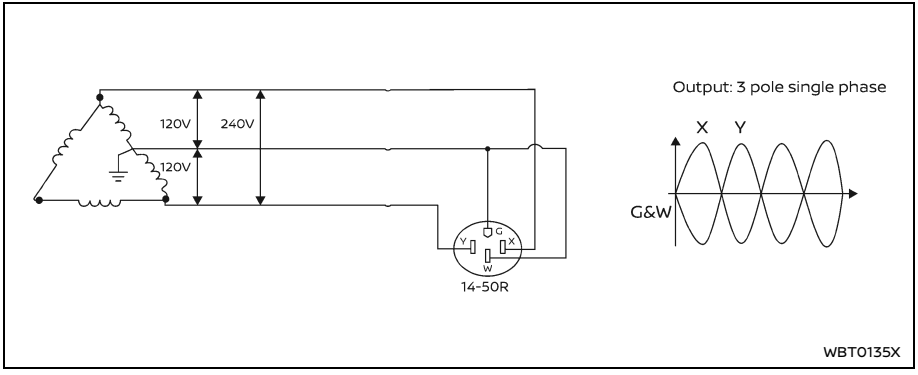

Correct electric outlet connection If connected to three phase power supply, EVSE does not work normally.

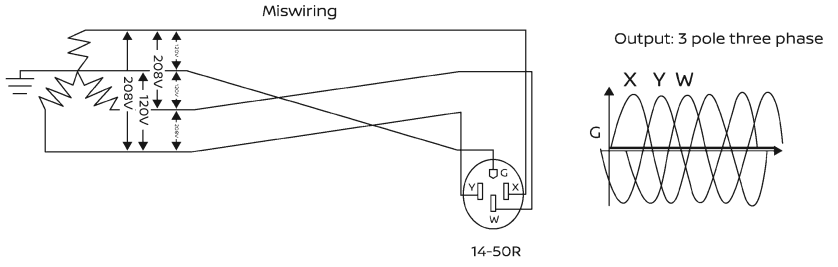

Incorrect electric outlet connection If EVSE is connected to this miswired outlet, EVSE does not work and the POWER indicator light (orange) on the EVSE control box will blink.

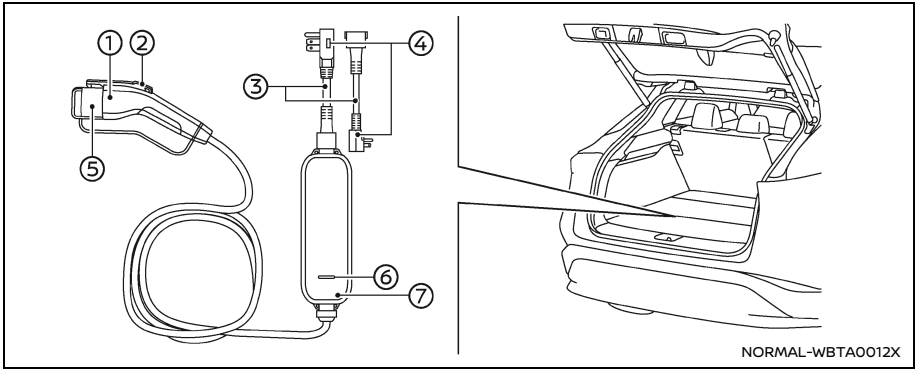

① Charge Connector
② Release Button
③ Genuine NISSAN exchangeable plug
④ Plug
⑤ Cap
⑥ Indicator light
⑦ Control box

To start normal charging

NOTE:
Charge schedule, remote charge and immediate charge can be performed in the normal charge mode. For additional information, see "Charging methods" (P.71).

1. Push the P (Park) position switch to place the vehicle in the P (Park) position and apply the parking brake.
2. When charging the Li-ion battery, place the power switch in the OFF position.
3. Open the Normal Charge Port (J1772) lid and cap on the driver side of vehicle. For additional information, see "Charge port lid" (P.285).
4. Take out the EVSE from the luggage compartment.

   When your vehicle is equipped with the exchangeable plug, connect the exchangeable plug for AC 240 volt to the control box.

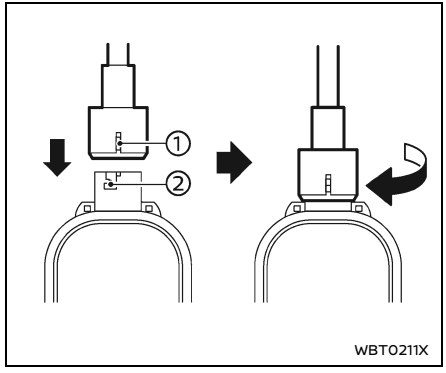

   To connect the exchangeable plug to the control box:

   Align the mark of the plug ① with the mark of the control box ② as shown in the illustration.

   Insert the plug into the control box.

   Rotate it until a click sounds.

   Pull the cable to ensure if it is securely connected.

   To remove the exchangeable plug from the control box:

   Rotate the plug of the exchangeable plug backward.

5. Connect the electrical plug to the AC 220 - 240 volt, 50A dedicated electrical

outlet. If it is connected normally, the green light on the EVSE control box indicator light illuminates.

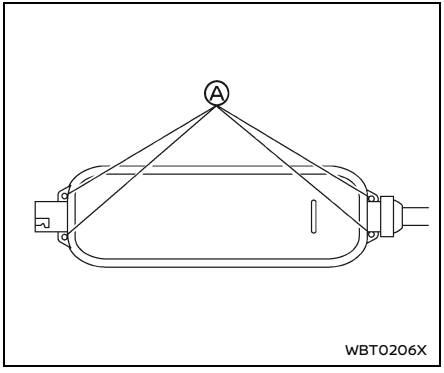

NOTE:

You can pass a rope through the holes Ⓐ on the control box in order to hang it up while the Li-ion battery is charging. Use the EVSE with the plug in an upright position. (The cord should extend down from the outlet.)

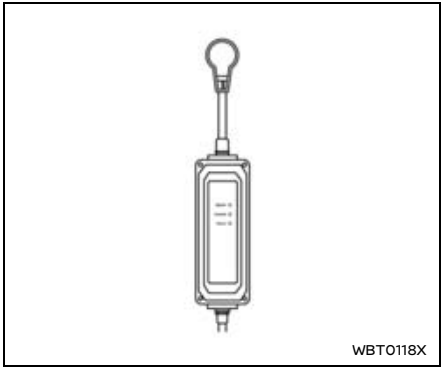

Example

6. Open the charge port cap. For additional information, see "Charge port cap" (P.286).

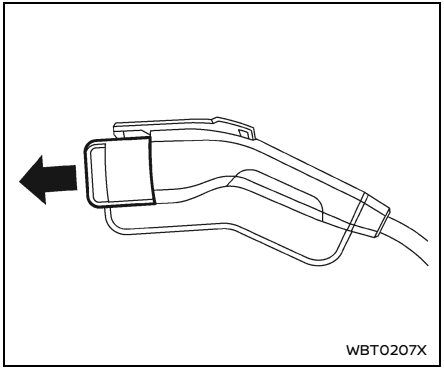

7. Remove the cap from the charge connector.

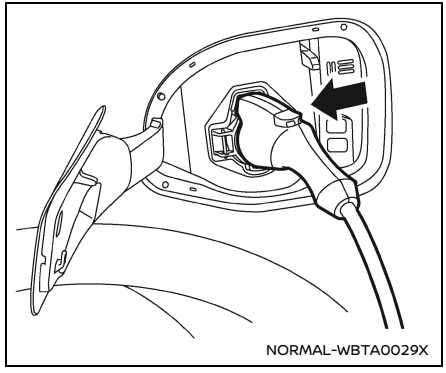

Example

8. Connect the charge connector to the charge port. If it is connected normally, a beep will sound once.
9. If charging has started, a beep will sound twice and the charging status indicator light will operate. For additional information, see "Charging status indicator light" (P.75).

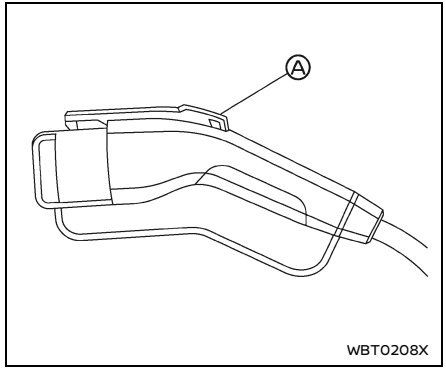

10. When recharging outside, such as in your driveway, use a commercially available padlock attached in position Ⓐ to prevent theft.

To stop normal charging:

1. Ensure that the charge connector lock is not engaged. For additional information, see "Charge connector lock" (P.65).

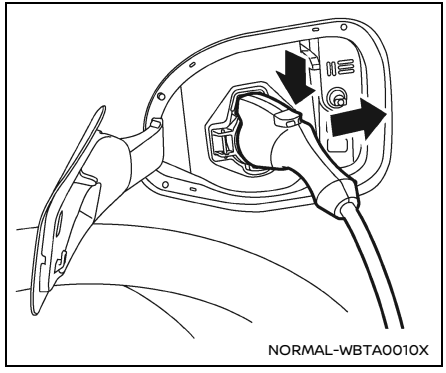

Example

2. Press the button on the charge connector, release the lock and remove the charge connector from the charge port.

NOTE:

When connecting or removing the charge connector, the charge port light will illuminate for approximately 30 seconds. (See "Charge port light" (P.287).)

When you walk away from the vehicle with the Intelligent Key, the charge port light will go off.

3. Attach the cap to the EVSE.
4. Remove the electrical plug from the AC 220 - 240 volt, 50A dedicated electrical outlet.

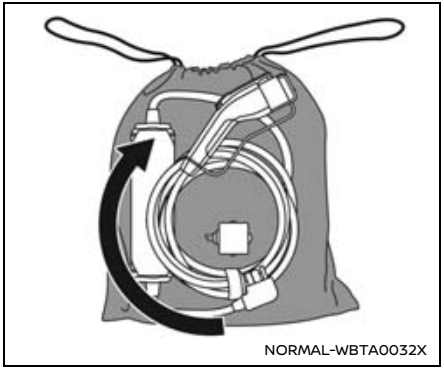

Example

5. Store in its case.

NOTE:
Perform the following procedure to store the EVSE in the case:

1. Wind the charge cable into a size that will allow it to be stored in the case (approximately 12 in (30 cm) in diameter). Winding the charge cable in the direction shown above avoids shortening the cable life.
2. Place the EVSE into the case.
3. Store the case in the luggage compartment.
4. After closing the cap on the charge port, close the charge port lid.

To stop charging mid-charge, remove the charge connector. Charging automatically stops.

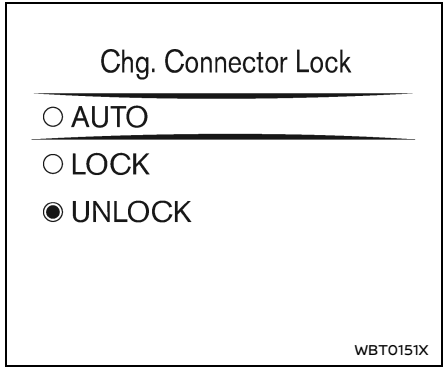

CHARGE CONNECTOR LOCK

Basic information

The normal or trickle charge connector (J1772), or Vehicle Load Connector (VLC) (if so equipped) (see "Vehicle to Load (V2L) system (if so equipped)" (P.233)) can be locked to the normal charge port.

Perform the following steps and the charge connector lock mode can be selected:

1. Using the steering wheel switches, push the ◀ ▶ button until “Settings” appears in the vehicle information display and then push the

scroll dial. Use the scroll dial to select "EV Settings". Then push the scroll dial.

2. Select "Chg. Connector Lock" and push the scroll dial.
3. Select the preferred mode of "AUTO", "LOCK" or "UNLOCK" and push the scroll dial.

NOTE:

- **The charge connector lock can be activated when the vehicle is in the P (Park) position and the charge connector or VLC (if so equipped) is connected. The charge connector lock will not be activated if the charge connector is not properly connected.**
- **The charge connector lock will be applied for both the normal charge port and the DC Fast Charge port simultaneously.**
- **If the charge connector or VLC (if so equipped) is not correctly connected, the charging status indicator light will flash in red and a beep will sound three times for 30 seconds. (See "Charging status indicator light" (P.75).)**

AUTO mode

When AUTO mode is selected, the charge connector is locked when it is connected, and while charging is in process. The charge connector will be unlocked automatically when charging is stopped.

LOCK mode

When LOCK mode is selected, the charge connector will remain locked.

UNLOCK mode

When UNLOCK mode is selected, the charge connector will remain unlocked.

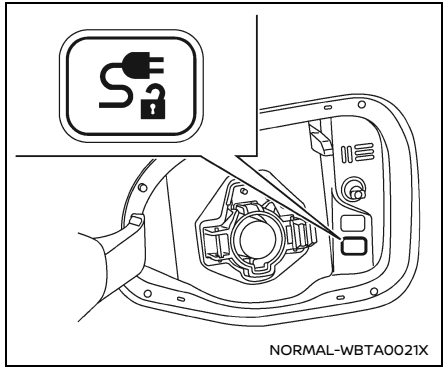

Example

Unlock operation

To unlock the charge connector, push the charge connector unlock switch in the charge port after unlock the driver's door or approach the vehicle with the Intelligent Key.

After 30 seconds, the charge connector lock is locked again.

NOTE:

- **Depending on the charging station, the lock mechanism established by local standards may not be compatible with your vehicle. It may not be**

possible for the charge connector to lock to your vehicle.

- **When the power source is cut off in the event of a power outage, etc. while charging in AUTO mode, the connector will be unlocked. After power recovery, the charge connector lock is locked again.**
- **The charge connector lock will be applied for both the normal charge port and the DC Fast Charge port simultaneously.**

If the charge connector cannot be unlocked

If the charge connector cannot be unlocked, proceed as follows:

1. Push the LOCK button on the Intelligent Key to lock all the doors.
2. Push the UNLOCK button on the Intelligent Key to unlock all the doors.
3. Push the charge connector unlock switch in the charge port.
4. Remove the charge connector from the charge port.

For the DC Fast Charge connector, if the charge connector still cannot be unlocked, please refer to the mechanical release.

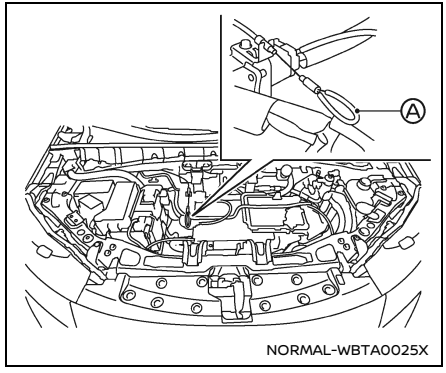

DC Fast Charge connector mechanical release:

CAUTION

Do not unlock the charge connector using the lever when the charge connector lock is operated normally.

If the DC Fast Charge connector cannot be unlocked, proceed as follows:

1. Ensure that the charging has been stopped.
2. Place the power switch in the OFF position.
3. Open the hood.
4. Locate the lock release cable handle Ⓐ and pull the cable. The charge connector lock will be released mechanically.
5. Remove the charge connector from the charge port.

For the normal charge connector, it is recommended to contact a NISSAN certified LEAF dealer.

HOW TO DC FAST CHARGE

Basic information

Even when charging the Li-ion battery using a charger capable of more than the vehicle's maximum charging power, the maximum power from the charger will be limited to the vehicle's maximum charging power, it will be changed based on the vehicle status.

It may take more time to charge the Li-ion battery using the DC Fast Charger if the temperature of the Li-ion battery is high or low.

WARNING

- **Always use a DC Fast Charger that is compatible with this vehicle. Using an incompatible DC Fast Charger may cause a fire or malfunction resulting in serious personal injury or death.**
- **Before starting the DC Fast Charge, carefully read the instructions provided on the DC Fast Charger and make sure the DC Fast Charge connector is properly connected and locked to the vehicle. Failure to connect or operate the DC Fast Charger correctly could cause damage to the vehicle or the charging equipment.**

CAUTION

- **The electric vehicle is equipped with charging safeguards to protect the battery if it reaches a certain temperature level leading to a longer charging time.**
- **Charge time depends on charging conditions, including charger type and condition, battery temperature, Li-ion battery temperature control system activation status and ambient temperature.**
- **Time taken for successive DC Fast Charges will be longer if the battery temperature activates the battery safeguarding technology.**

NOTE:

- **When the Li-ion battery available charge and Li-ion battery capacity are shown on the DC Fast Charger unit, the readings may differ from the actual Li-ion battery available charge/capacity.**
- **Depending on the DC Fast Chargers, the operation procedure may differ from the one shown in this manual. Follow the instructions provided on the DC Fast Charger.**
- **The DC Fast Charge port will be compatible with most charging connectors on the charging stations (CCS/NACS), either through the vehicles native port or by the use of an available NISSAN adapter kit. Charging stations using standard connectors (CCS/NACS) will be UL certified for safe use in the US. However, not all charging stations may support this standard. If you attempt to charge from a non-compatible charging station, you may not receive a complete charge or may not be able to charge at all due to hardware and software differences.**

How to start DC Fast Charge

1. Park the vehicle in a position that allows sufficient margin for the charge cable length.
2. Push the P (Park) button to place the vehicle in the P (Park) position, and apply the parking brake.
3. Place the power switch in the OFF position.
4. Open the DC Fast Charge Port (J3400) lid on the passenger side of the vehicle. For additional information, see "Charge port lid" (P.285).

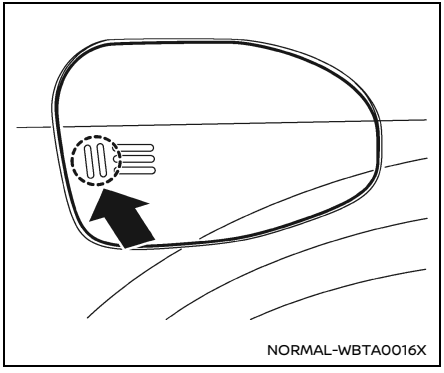
NORMAL-WBTA0016X

5. Open the charge port cap, follow the instructions on the quickcharge equipment, or app, and insert the charge connector straight all the way in, and hold it in place with your hand.

   Connect the charge connector to the charge port. If it is properly connected, a beep will sound once.

NOTE:

- **When the charge connector is properly and fully inserted, the beep sound only once.**

  If the charge connector is not properly inserted (half-latched), the beep sounds continuously for 30 seconds and the charging status indicator light will flash in red. If this happens, hold the charge connector by your hands and move it so that it is directly facing the charge port in a straight line.

  Once the connector is properly connected the beeps and red flashing will stop.

  If the charge connector cannot be removed from the charge port, see "If the charge connector cannot be unlocked" (P.67).

- **If a NACS normal charge connector is connected to the DC Fast Charge port, charging cannot be performed.**

CAUTION

Be sure to insert the charge connector straight into the DC Fast Charge port all the way in. Failure to do so may result in the Li-ion battery not charging or could cause damage to the charging equipment.

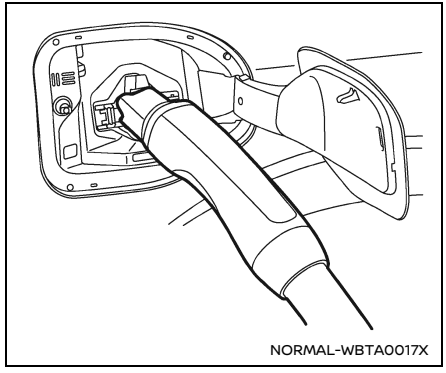
NORMAL-WBTA0017X

6. Follow the instructions on the DC Fast Charge equipment to start charging. When the equipment is properly installed and ready to charge, a beep sounds twice and the charging status indicator light will operate. See "Charging status indicator light" (P.75).

Charging ends in the following situations:

- When charging is complete.
- When the possible charge time set for the DC Fast Charger is exceeded.

NOTE:

- **Be careful not to come into contact with the DC Fast Charger, park the vehicle in a position that allows suffi-**

cient margin for the charge cable length, as the charge connector may not be connected properly when the charge cable is pulled in one direction.

- **If the charge connector appears to be stuck, see "If the charge connector cannot be unlocked" (P.67).**
- **If using a Genuine NISSAN adapter, refer to the adapter's instruction manual.**
- **Charging may automatically stop even if it is not completed.**
- **If charging stops mid-charge, you can restart charging by following the steps below:**

  Disconnect and reconnect the charge connector. Then start the DC Fast Charging process again.
- **The charge connector is locked to the charge port after it is connected and cannot be disconnected. Follow the instructions on the DC Fast Charge equipment to stop charging. Confirm charging is stopped by looking at the charging status indicator light on the instrument panel. The charge connector can be disconnected from the vehicle when charging has stopped.**
- **When DC Fast Charging, the Li-ion battery charging rate is slower as the percentage of available battery charge increases.**
- **When DC Fast Charging, the Li-ion battery charging rate is slower when the Li-ion battery temperature is extremely high or low.**

How to stop DC Fast Charge

Follow the instruction on the DC Fast Charge equipment to stop charging. Or, push the charge connector unlock switch in the charge port after unlock the driver's door or approach the vehicle with the Intelligent Key.

1. Confirm charging is stopped by looking at the charging status indicator light on the instrument panel. The charge connector can be disconnected from the vehicle when charging is stopped.

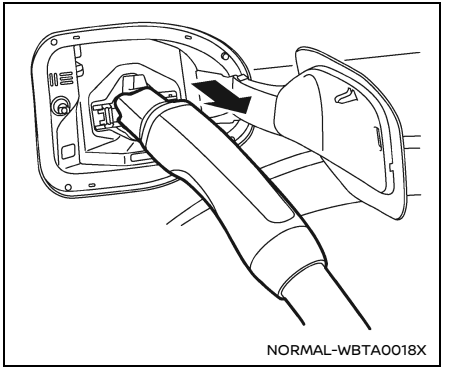

2. Remove the charge connector from the vehicle and store it away properly.

NOTE:

- **If the charge connector appears to be stuck, see "If the charge connector cannot be unlocked" (P.67).**
- **The charge connector will be locked after it is connected. To unlock the charge connector without starting to charge, push the charge connector unlock switch in the charge port after unlock the driver's door or approach the vehicle with the Intelligent Key.**

- **When connecting or removing the charge connector, the charge port light will illuminate for approximately 30 seconds. (See "Charge port light" (P.287).)**

  When you walk away from the vehicle with the Intelligent Key, the charge port light will go off.

3. Close the charge port cap.
4. Close the charge port lid.

CAUTION

As the DC Fast Charge connector is heavier in comparison to the other charge connectors, allowing it to drop could cause damage to the vehicle or charge connector or personal injury. When removing the connector, be sure to pull it out straight and as carefully as possible.

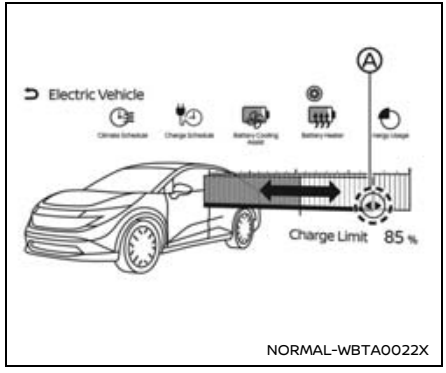

Example

CHARGE LIMIT

The charge limit stops the vehicle from charging when it reaches the desired value. This limit affects AC and DC charging.

See "Electric Vehicle screen" (P.36) to display this screen.

Touch the point Ⓐ and drag it to the desired charge limit (40% to 100%).

The charge limit can also be set by the vehicle information display. See "EV Settings" (P.177).

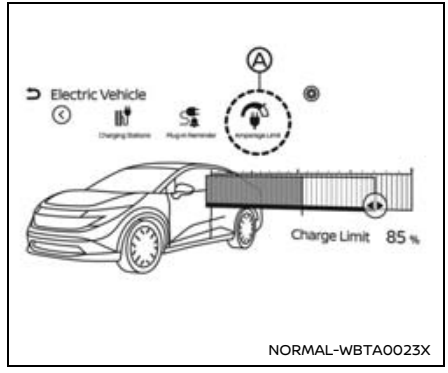

Example

AMPERAGE LIMIT

This function is used to limit the normal charging amperage, to prevent a charging outage when using a home outlet or unfamiliar normal charger.

See "Electric Vehicle screen" (P.36) to display this screen.

Touch the "Amperage Limit" key Ⓐ.

Select desired amperage (8, 12, 16, 24 or Max).

CHARGE SCHEDULE

Basic information

The charge schedule function can be

used for the normal charge only. This function cannot be used for the DC Fast Charge.

Use charge schedule to schedule when the Li—ion battery charges. You can save three schedule settings that include the charging start time and end time. The timer settings can be applied to each day of the week. The vehicle automatically begins charging at the scheduled times when the charge connector is connected to the vehicle. The timers do not need to be reset each time the Li—ion battery needs to be charged.

How to set charge schedule

The charge schedule settings can be changed with the touch screen display.

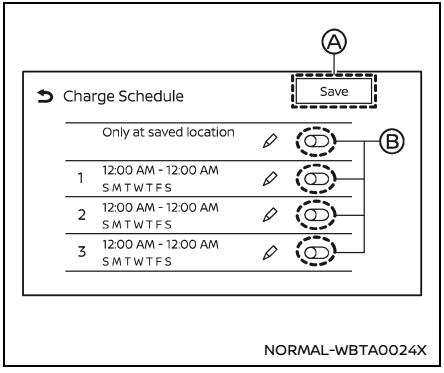

See "Electric Vehicle screen" (P.36) to display this screen.

Touch “Charge Schedule” key. Charge Schedule screen is displayed.

Available actions:

- **Only at saved location:**

  When this item turns on, charge schedule works only at the saved location (for example, your home).

  This function is only available if a location is registered. See "Save the location for charge schedule" (P.72).

- **Timer settings:**

  Touch Ⓑ to turn on/off the timer. The indicator light will turn on when the timer setting is turned on.

- **"✎" key:**

  Touch to display the charge schedule settings screen. Set preferred time and day of the week for vehicle charging. (See "Charge schedule setting screen" (P.73).)

After completing the settings, touch the "Save" key Ⓐ, place the power switch in the OFF position, and then connect the charge connector to the vehicle.

Save the location for charge schedule

You can register the designated location for the charge schedule (for example, at your home). When "Only at saved location" item is selected, the charge schedule will only work at the registered and saved location.

To register and save the location, park the vehicle at the place you want to set, then follow the procedure below.

See "Electric Vehicle screen" (P.36) to display the Charge Schedule screen.

Touch "✎" key of "Only at saved location" to display the map locator. Then touch

"Done" key.

To delete the saved location, touch the "Done" again.

NOTE:
If a location is already registered, you will be prompted to delete the existing location first. After deletion of the existing location, register and save the new location.

Charge schedule setting screen

Three different timer setting can be registered.

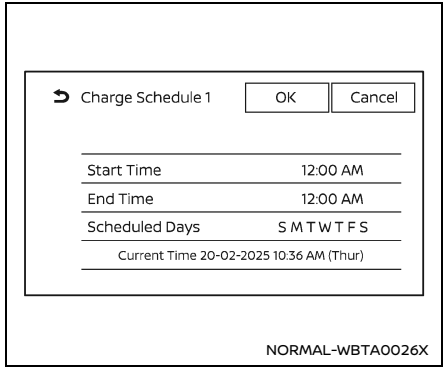

1. Touch to change the start time.
2. Touch to change the end time.
3. Touch to change the weekly schedule.
4. Touch "OK", then touch "Save" to save the settings.

Operating tips for charge schedule

- Charge schedule is performed according to the current time setting on the display. When setting the charge schedule function, be sure to check that the current time displayed is correct.
- The Li-ion battery may not be charged to the limit if the charge schedule start time and end time are set such that there is not enough time to charge the Li-ion battery.
- To turn off the charge schedule function, touch the on/off key on the charge schedule setting screen to turn the indicator off. After this operation has been performed, the charge schedule function is turned off. The start and end time settings are not deleted, even if the charge schedule function is turned off.
- If the day of the week is not selected on the charge schedule setting screen, the charge schedule will not operate on that day. The system will wait until the next set charging time to perform charging.
- The timer setting can be changed while charge schedule is in operation. When the setting is changed while charge schedule is in operation, the new settings are applied immediately.
- The Li-ion battery will not charge when the charge connector is connected to the vehicle until the next scheduled charge start time when the charge schedule is active. If necessary, use immediate charge or remote charge (if so equipped) to charge the Li-ion battery.

- Some charging stations used to perform normal charge are equipped with timer functions. If the charger timer function and the vehicle timer are both set, and the two timers are not set to operate at the same time, it is possible that the charger will not start or that the Li-ion battery will not be charged to the limit.
- The Li-ion battery may not be charged to the limit or the charging time may be longer when the Li-ion battery temperature control system or the air conditioning system operates while charging using the charge schedule.
- Li-ion battery electricity will be consumed if the Li-ion battery temperature control system or the air conditioning system operates while the vehicle is not in charging state.

Immediate charge

When the charge schedule is not turned on, charging automatically starts when a normal charge connector is connected to the vehicle.

Use the immediate charge mode any time you need to start charging immediately while a charge schedule is turned on.

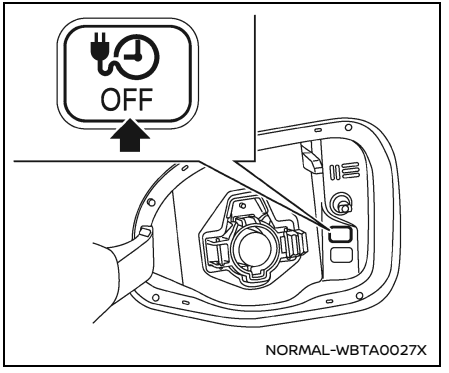

To perform the immediate charge:

1. Place the power switch in the OFF position and connect the normal charge connector to the charge port.
2. Push the immediate charge switch in the charge port after unlock the driver's door or approach the vehicle with the Intelligent Key.

NOTE:

- **When the charging status indicator light (see "Charging status indicator light" (P.75)) flashes in green after the charge connector is connected, the charge state is in the charge schedule mode. You can push the immediate charge switch to start the immediate charge.**
- **To cancel the immediate charge mode, remove the charge connector from the vehicle. The charge mode switches to charge schedule and the vehicle will be in a charging standby state.**

CHARGING RELATED REMOTE FUNCTION

This vehicle incorporates a communication device that is called a TCU (Telematics Communication Unit). The communication connection between this unit and the NISSAN Data Center allows for various remote function services.

- **Remote battery status check:**

  The charging status of the Li-Ion battery can be checked using the MyNISSAN App (if so equipped), even if you are not in the vehicle.
- **Remote start/stop charge:**

  The function of starting/stopping the Li-ion battery charge is available using the MyNISSAN App (if so equipped).
- **Plug-in reminder:**

  A notification can be sent to your internet enabled smart phone if the plug is not connected at the specific

time you selected, after turning off the power switch.

- **Plug and Charge:**

  By installing the contract certification in the vehicle and registering a charging plan in the MyNISSAN app (if so equipped), charging can be done at many public charging facilities without having to go through the payment procedure each time.

  Navigations to the charging facilities will also be provided via the smartphone app or the Map locator system of the vehicle (if so equipped).

  If having issues charging with Plug and Charge, please access the MyNISSAN app and disable the Plug and Charge function. Then start charging with another payment method.

NOTE:

- **Enrolling in NissanConnect® Services is necessary before using this service.**
- **To check the Li-ion battery charging status using an internet enabled smart phone, the following conditions must be met:**
  - **The vehicle must be located in a cellular phone coverage area.**
  - **The cellular phone must be located in an area with cellular phone coverage.**
  - **Some cellular phones are not compatible and cannot be used to check the Li-ion battery charging status. Please confirm beforehand.**
- **Certain remote functions require a compatible smart phone, which is not included with the vehicle.**
- **NissanConnect® Services information system features are included through a subscription service which requires owner consent to activate. The subscription must be active to use these features.**
- **NissanConnect® Services communications may be received at a verified e-mail address or via SMS/text message or push notification on compatible smart phones.**
- **Standard text rates and/or data usage may apply depending on your carrier.**

CHARGING RELATED INDICATOR LIGHTS

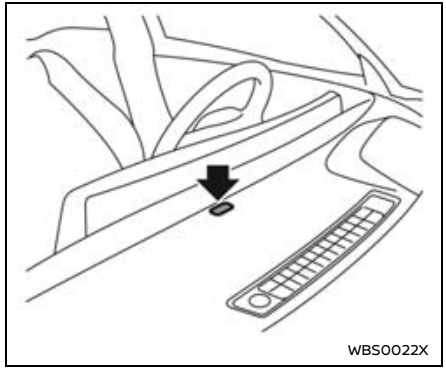

Example

CHARGING STATUS INDICATOR LIGHT

The charging status indicator light primarily indicates the charging status, and is visible from both inside and outside the vehicle.

When the charge connector is connected incorrectly

The indicator light will flash in red and a beep will sound three times for 30 seconds when the charge connector or Vehicle Load Connector (VLC) (if so equipped) (see "Vehicle to Load (V2L) system (if so equipped)" (P.233)) is connected incorrectly to the charge port, or when the

NACS normal charge connector is connected to the DC Fast Charge port.

(Depending on the device, the indicator lights and beeps may not work as described above.)

The charging cannot be performed or Vehicle to Load (V2L) system (if so equipped) cannot be used in this condition.

Ready for charge schedule

If the charge schedule is set, the indicator light flashes in green. (The indicator light illuminates for approximately 2 seconds and will turn off for approximately 2 seconds, repeatedly.) The indicator light turns off after approximately 5 minutes.

When charging

When the Li-ion battery is being charged, the charging status indicator light flashes in blue and it will change the flashing speed depending on the amount the Li-ion battery is charged. As the lithium-ion battery charging improves, the indicator flashes slowly.

The amount the Li-ion battery is charged is also displayed by the Li-ion battery available charge gauge on the vehicle information display.

When charged to the limit

The indicator light illuminates in blue when the Li-ion battery is charged to the limit.

The indicator light turns off after approximately 5 minutes or when the charge connector is removed.

When the Vehicle to Load (V2L) system is active*

* While charging, the charging status indicator operation will take priority.

The indicator light flashes in green when the Vehicle to Load (V2L) system turns on. (The indicator light illuminates for approximately 1 second and will turn off for approximately 1 second, repeatedly.)

For the Vehicle to Load system, see "Vehicle to Load (V2L) system (if so equipped)" (P.233).

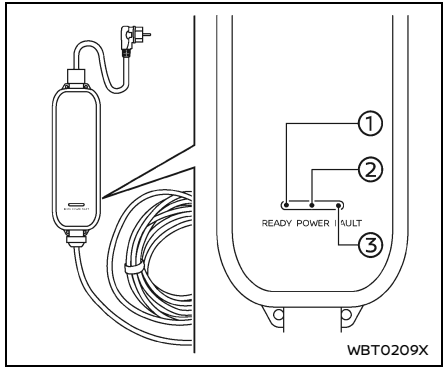

① READY: GREEN

② POWER: ORANGE

③ FAULT: RED

NISSAN EVSE (Electric Vehicle Supply Equipment) CONTROL BOX INDICATOR LIGHT (if so equipped)

When a normal or trickle charge is being performed using the NISSAN EVSE (Electric Vehicle Supply Equipment), the charging status as well as any EVSE malfunction can be checked with the indicator lights on the EVSE control box.

Symbol	Meaning
●	Light ON
○	Flashing
OFF	Light OFF

Status and action to be taken :
All indicator lights will illuminate for a 0.5 second check when the EVSE is first connected to the outlet socket.

READY	POWER	FAULT
●	●	●

Status and action to be taken :
The EVSE is connected to the outlet socket. If the normal charge connector is connected to the vehicle normal charge port, charging is complete or the charge schedule is set (refer to"Charge schedule" (P.7 1)).

READY	POWER	FAULT
●	OFF	OFF

Status and action to be taken :
The EVSE is charging the vehicle.

READY	POWER	FAULT
●	●	OFF

Status and action to be taken :
No power is detected by the EVSE from the outlet socket. Check the outlet supply breaker. If the outlet supply is OK and all the indicator lights do not illuminate for 0.5 seconds, the EVSE may be broken. Stop using the EVSE. It is recommended that you visit a NISSAN certified LEAF dealer.

READY	POWER	FAULT
OFF	OFF	OFF

Status and action to be taken :
The EVSE could not detect sufficient outlet socket earth grounding for reliable EV charging. Consult a qualified electrician to have the outlet checked.

READY	POWER	FAULT
○	OFF	OFF
●	○	OFF

Status and action to be taken :
The temperature detection circuit in the domestic plug of the EVSE is malfunctioning.
Indicator light status: Light OFF = Charge is stopped, Flashing = Charge current is reduced.
The EVSE is restricting the charging current. It is recommended that you contact a NISSAN certified LEAF dealer.

READY	POWER	FAULT
○	○	●
○	OFF	●

Status and action to be taken :
The EVSE detected excessive heat in the domestic plug.
Indicator light status: Light OFF = Charge is stopped, Flashing = Charge current is reduced.
The EVSE is restricting the charging current for safety. This may be caused by a malfunction in the outlet. Pull out the plug once, and after a while then reconnect it. If the same indication continues after reconnecting an outlet, immediately stop using the outlet and consult a qualified electrician. If the same indication continues after consulting a qualified electrician, it is recommended that you contact a NISSAN certified LEAF dealer.

READY	POWER	FAULT
○	○	○
○	OFF	○

Status and action to be taken :
The EVSE internal circuits malfunction. Stop use immediately it is recommended that you contact a NISSAN certified LEAF dealer.

READY	POWER	FAULT
●	○	●
●	OFF	●

Status and action to be taken : The EVSE detected leakage current or PWM signal error. Stop using the EVSE immediately. It is recommended that you contact a NISSAN certified LEAF dealer and check EVSE and vehicle.		
READY	POWER	FAULT
●	OFF	○

CHARGING TROUBLESHOOTING GUIDE

Symptom	Possible cause	Possible solution
Charging cannot be performed.	The Li-ion battery is already fully charged, or charged to charge limit.	Confirm the available Li-ion battery power remaining by checking Li-ion battery available charge gauge. If the gauge indicates full or charged to charge limit set, the Li-ion battery is already fully charged and cannot be charged. Charging automatically turns off if the Li-ion battery is charged to the limit. If the current state of charge reaches to the charge limit set (for example 80%), charging stops at the limit. Charging will resume when the charge limit is raised to a higher level (for example 100%).
	The 12-volt battery is discharged.	The Li-ion battery cannot be charged if the vehicle electrical systems cannot be turned on. If the 12-volt battery is discharged, charge or jump start the 12-volt battery. See "Jump starting" (P.497).
	The vehicle has a malfunction.	The vehicle or charger may have a malfunction. Confirm if the warning light on the meter is illuminated. Confirm if the indicator on the charger is indicating a malfunction. If a warning is displayed, stop charging and consult a qualified electrician to have the outlet checked.
Normal or trickle charge cannot be performed.	There is no electrical power coming from the outlet.	Confirm that there has not been a power failure. Make sure the circuit breaker is active. If an electrical outlet or charging station with a timer device installed is used, power will only be available at the time set by the timer.
	The plug is not connected correctly.	Confirm the plug is connected correctly.
	There is no electrical power coming from the normal charging station.	Confirm operation procedure of the charging station.
	The charge connector is not connected correctly.	Confirm the charge connector is connected correctly.
	The EVSE or charging device may have a malfunction.	If Genuine NISSAN EVSE is used, see "Charging troubleshooting guide" (P.79) for the device.
	The outlet (that the EVSE is connected to) is not connected to the power source correctly.	Confirm the condition according to the illumination pattern of the indicator light on the EVSE. For additional information, see "NISSAN EVSE (Electric Vehicle Supply Equipment) control box indicator light (if so equipped)" (P.76).
Immediate charge cannot be performed.	Charge schedule has been set.	Push the immediate charge switch or turn off the charge schedule. See "Charging methods" (P.71).
Charge level increases too slowly during normal charge.	Amperage limit is set (charging current is limited).	Set the amperage limit to higher level. See "Amperage limit" (P.71).

Symptom	Possible cause	Possible solution
Charge schedule cannot be performed.	The charge cable is not connected.	Connect the charge cable.
	The time on the clock is wrong.	The charge schedule does not start charging based on the clock located on the vehicle information display. Adjust the time. (See "Clock" (P.177).) If the 12-volt battery is discharged or if the Li-ion battery is disconnected, the time setting must be updated.
	Charge schedule has not been set.	Set the charge schedule. See "Charge schedule" (P.71).
	Remote charge stop is activated.	Remove the charge connector and connect it again when the vehicle power switch is ON, or change the charge schedule setting.
	Charging does not start because the charge schedule start time and end time are set and the current time is before the set start time.	Confirm when the charge schedule time is set to start charging. Change the charge schedule setting to the desired charge time or push the immediate charge switch. See "Charging methods" (P.71).
	The immediate charge switch is pushed.	To cancel the immediate charge, remove the charge connector from the vehicle.
Charge schedule cannot be stopped.	The immediate charge switch is pushed (immediate charge is started). The remote charge is activated (remote charge is started)	Remove the charge connector and connect it again when the vehicle power switch is ON.
Normal charge stops during charging.	There is no electrical power coming from the outlet.	There may have been an electrical power failure, or the circuit breaker may have failed. Charging will resume when the power source is reset.
	The charge cable has been disconnected.	Check that the charge cable has not been disconnected.
	Charge schedule end time has been reached.	When the charge schedule is set and the charge end time is reached, charging will be stopped, even if the Li-ion battery is not charged to the limit.
	The electrical power supply from the normal charging station was stopped.	Confirm operation procedure of the charging station.

Symptom	Possible cause	Possible solution
Normal charge connector cannot be removed.	The charge connector lock is locked.	Unlock the charge connector lock. See "Unlock operation" (P.66).
	The charge connector unlock condition is not met.	Push the charge connector unlock switch in the charge port after unlock the driver's door or approach the vehicle with the Intelligent Key.
	The vehicle has a malfunction.	If the normal charge connector cannot be removed when the connector has been unlocked, follow the unlocking steps. See "If the charge connector cannot be unlocked" (P.67).
DC Fast Charge cannot be performed.	The DC Fast Charge connector is not connected correctly.	Check that the charge connector is connected correctly. If it is not connected correctly, once remove the charge connector from the charge port, and insert the charge connector straight into the charge port all the way in.
	After charging stopped, charging was started again without removing and connecting the charge connector.	Once remove the charge connector from the charge port, and the connect it again. Then restart DC Fast Charge.
	The self-diagnostic function of the DC Fast Charge device returns a negative result.	There is a possibility that the vehicle has a malfunction. Stop charging and it is recommended that you contact a NISSAN certified LEAF dealer.
	The power switch of the DC Fast Charger is off.	Check the power switch of the DC Fast Charger.
	Plug and Charge function of MyNISSAN app (if so equipped) does not match the charger.	Access the MyNissan app and disable Plug and Charge function. Then start charging with another payment method.
DC Fast Charge stops during charging.	Charging is stopped by the DC Fast Charge timer.	Charging will stop depending on the timer function setting of the DC Fast Charge device. If you need to charge the Li-ion battery more, start the charging procedure again.
	The power supply for the DC Fast Charger is off.	Check whether the power supply for the DC Fast Charger is off.

Symptom	Possible cause	Possible solution
DC Fast Charge connector cannot be removed.	The charge connector is locked.	Push the charge connector unlock switch in the charge port after unlock the driver's door or approach the vehicle with the Intelligent Key.
	The charge connector is not properly inserted (half-latched) and the charge connector lock mechanism got stuck at the half-way.	• Park the vehicle in a position that allows sufficient margin for the charge cable length, as the charge connector may not be connected properly when the charge cable is pulled in one direction. • Insert the charge connector straight all the way in, and hold it in place with your hand. If the DC Fast Charge connector cannot be removed if the connector unlock switch is pushed, follow the unlocking steps. See "If the charge connector cannot be unlocked" (P.67).
	The charge connector unlock condition is not met.	Push the charge connector unlock switch in the charge port after unlock the driver's door or approach the vehicle with the Intelligent Key.
	The vehicle has a malfunction.	If the DC Fast Charge connector cannot be removed if the connector unlock switch is pushed, follow the unlocking steps. See "If the charge connector cannot be unlocked" (P.67).

1 Safety — Seats, seat belts and supplemental restraint system

Seats 85
- Basic information 85
- Front seats 86
- Rear seats 89
- Armrest 91

Head restraints/headrests 92
- Basic information 92
- Adjustable head restraint/headrest components 93
- Non-adjustable head restraint/headrest components 93
- Remove 93
- Install 94
- Adjust 94

Seat belts 96
- Precautions on seat belt usage 96
- Seat belt warning light and chime 98
- Pregnant women 99
- Injured persons 99
- Rear center seat belts 99
- Three-point type seat belt with retractor 99
- Seat belt extenders 102
- Seat belt maintenance 103

Child safety 103
- Basic information 103
- Infants 104
- Small children 104
- Larger children 104

Child restraints 106
- Basic information 106
- Precautions on child restraints 106
- Lower Anchors and Tethers for CHildren (LATCH) system 108
- Rear-facing child restraint installation using LATCH 111
- Rear-facing child restraint installation using the seat belts 113
- Forward-facing child restraint installation using LATCH 116
- Forward-facing child restraint installation using the seat belts 119
- Booster seats 123

Supplemental Restraint System (SRS) 127
- Precautions on SRS 127
- NISSAN Advanced Air Bag System (front seats) 134

Driver and front passenger supplemental knee air bag 142
Front, front central*, rear outboard seat-mounted side-impact supplemental air bag and roof-mounted curtain side-impact and rollover supplemental air bag systems 143
Seat belts with pretensioners (front and rear outboard seats) 145
Supplemental air bag warning labels 146
Supplemental air bag warning light 147
Repair and replacement procedure 147

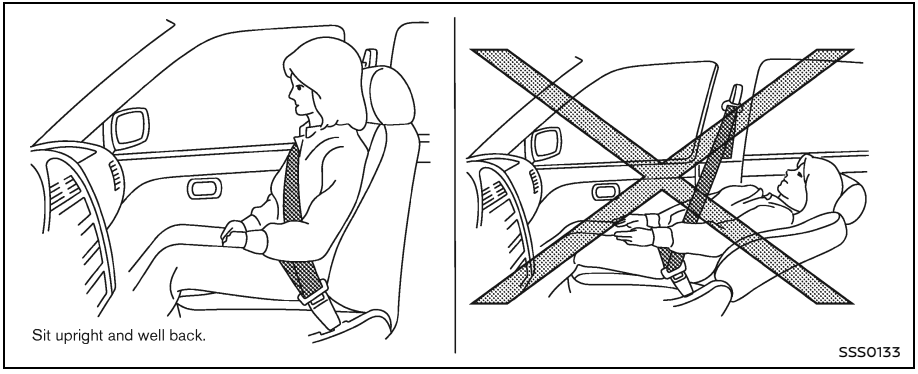

BASIC INFORMATION

WARNING

- **Do not ride in a moving vehicle when the seatback is reclined. This can be dangerous. The shoulder belt will not be against your body. In an accident, you could be thrown into it and receive neck or other serious injuries. You could also slide under the lap belt and receive serious internal injuries.**
- **For the most effective protection when the vehicle is in motion, the seat should be upright. Always sit well back and upright in the seat with both feet on the floor and adjust the seat properly. See "Precautions on seat belt usage" (P.96).**
- **After adjustment, gently rock in the seat to make sure it is securely locked.**
- **Do not leave children unattended inside the vehicle. They could unknowingly activate switches or controls. Unattended children could become involved in serious accidents.**
- **To help avoid risk of injury or death through unintended operation of the vehicle and/or its systems, do not leave children, people who require the assistance of others or pets unattended in your vehicle. Additionally, the temperature inside a closed vehicle on a warm day can quickly become high enough to cause a significant risk of injury or death to people and pets.**
- **Do not adjust the driver's seat while driving so full attention may be given to vehicle operation. The seat may move suddenly and could cause loss of control of the vehicle.**

- **The seatback should not be reclined any more than needed for comfort. Seat belts are most effective when the passenger sits well back and straight up in the seat. If the seatback is reclined, the risk of sliding under the lap belt and being injured is increased.**
- **Do not place objects under the front seats as they could get stuck and prevent the seat from locking in place which could lead to an accident.**
- **Do not leave a cigarette lighter in the vehicle or place it on the floor or seat as it may be lit accidentally when luggage is loaded, when the seat is ad- justed, by a child or by being stepped on by a passenger, causing a fire.**

CAUTION

When adjusting the seat positions, be sure not to contact any moving parts to avoid possible injuries and/or damage.

FRONT SEATS

Basic information

Your vehicle seats can be adjusted in manual or power operation. For additional information about adjusting the seats, refer to the steps outlined in this section.

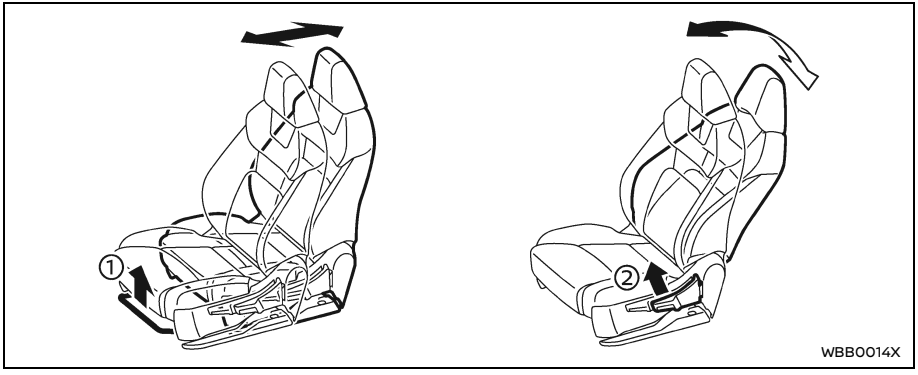

Front manual seat adjustment

Forward and backward:

1. Pull up the adjusting lever ①.
2. Slide the seat to the desired position.
3. Release the adjusting lever to lock the seat in position.

Reclining:

1. Pull up the adjusting lever ②.
2. Tilt the seatback to the desired position.
3. Release the adjusting lever to lock the seatback in position.

The reclining feature allows the adjustment of the seatback for occupants of different sizes to help obtain the proper seat belt fit. (See "Seat belts" (P.96).)

The seatback may be reclined to allow occupants to rest when the vehicle is parked.

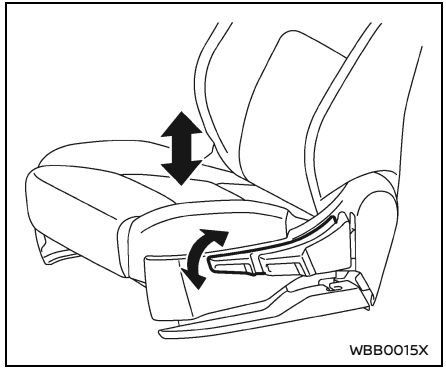

Seat lifter:

Pull up or push down the adjusting lever to adjust the seat height until the desired position is achieved.

Front power seat adjustment

Operating tips:

- The power seat motor has an auto-reset overload protection circuit. If the motor stops during the seat adjustment, wait 30 seconds, then reactivate the switch.
- To avoid discharge of the battery, do not operate the power seats for a long

period of time when the EV system is not running.

See "Memory seat (if so equipped)" (P.292) for the seat position memory function (if so equipped).

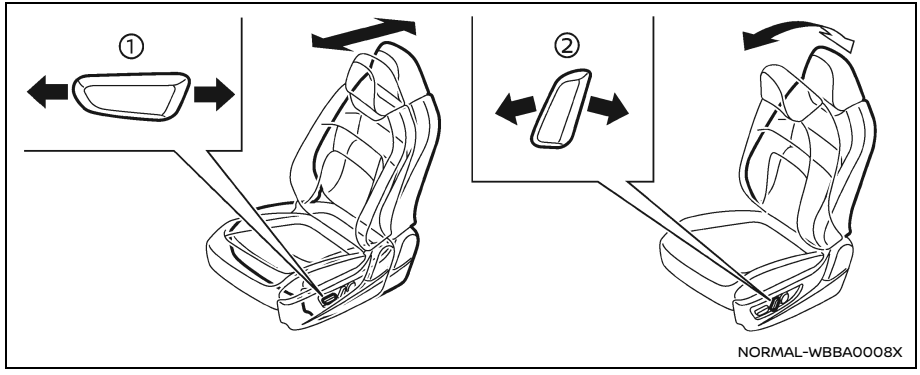

Forward and backward:

Move forward or backward the adjusting switch ① to the desired position.

Reclining:

Move forward or backward the adjusting switch ② to the desired position.

The reclining feature allows the adjustment of the seatback for occupants of different sizes to help obtain the proper seat belt fit. (See "Seat belts" (P.96).)

The seatback may be reclined to allow occupants to rest when the vehicle is parked.

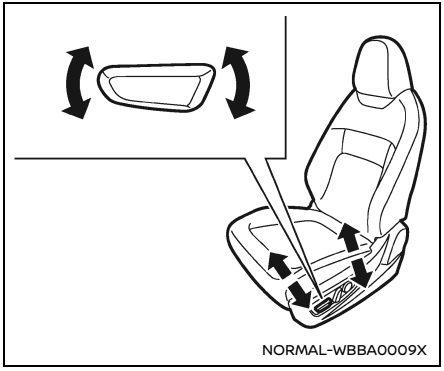

Seat lifter:

Move the switch as shown to adjust the angle of the front portion or height of the seat.

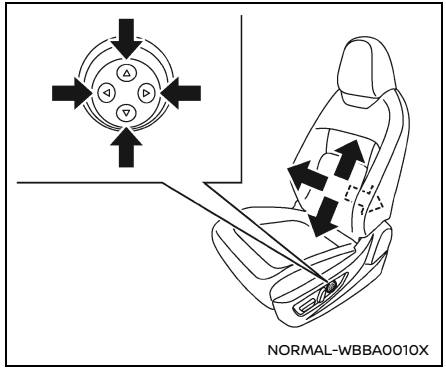

Lumbar support (if so equipped)

The lumbar support feature provides lower back support to the driver.

Push the switch as shown to adjust the seat lumbar area until the desired position is achieved.

NOTE:
An operating noise may be heard when the power switch is placed in the ON or OFF position to initialize the lumbar support. This is not a malfunction.

REAR SEATS

Folding

Before folding the rear seats

- Secure the outer seat belt on the seat belt hook. (See "Seat belt hook" (P.102).)
- If the rear seat is equipped with the head restraints/headrests, slide the front seat forward to make enough room behind the seat so that the rear seatback can be folded flat.
- Remove drink containers from the rear cup holder (if so equipped).

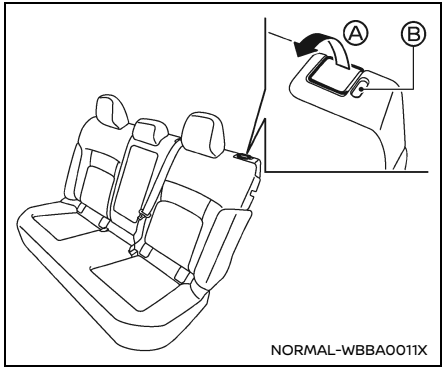

To fold down the seatback

- Pull up the lever Ⓐ and fold the seat-back flat.

To return the seatback

To return the seatback to a seating position, raise the seatback until it latches in place.

When returning the seatback, make sure that the seat belts are not interfering with the seatback latch mechanism.

Make sure the seatback lock indicator Ⓑ is in the stored position (no red part is visible).

⚠ WARNING

- **Before folding up the rear seats, ensure the seat belts are not obstructing the rear seatback latches to avoid damage to the seat belt webbing.**
- **When returning the seatback, make sure that the seat belts are not interfering with the seatback latch mechanism.**
- **Never allow anyone to ride in the cargo area or on the rear seats when they are in the fold-down position. In a collision, people riding in these areas without proper restraints are more likely to be seriously injured or killed.**
- **Do not allow people to ride in any area of your vehicle that is not equipped with seats and seat belts. Be sure everyone in your vehicle is in a seat and using a seat belt properly.**
- **Do not allow more than one person to use the same seat belt.**
- **Do not fold down the rear seats when occupants are in the rear seat area or any luggage is on the rear seats.**
  - **Make sure that the seat path is clear before moving the seat.**
  - **Be careful not to allow hands or feet to get caught or pinched in the seat.**
- **Head restraints/headrests should be adjusted properly as they may provide significant protection against injury in an accident. Always replace and adjust them properly if they have been removed for any reason.**
- **If the head restraints/headrests are removed for any reason, they should be securely stored to prevent them from causing injury to passengers or damage to the vehicle in case of sudden braking or an accident.**
- **When returning the seatbacks to the upright position, be certain they are completely secured in the latched position. If they are not completely secured, passengers may be injured in an accident or sudden stop.**

- **Properly secure all cargo to help prevent it from sliding or shifting. Do not place cargo higher than the seatbacks. In a sudden stop or collision, unsecured cargo could cause personal injury.**

WARNING

- **After adjustment, gently rock in the seat to make sure it is securely locked.**
- **Do not ride in a moving vehicle when the seatback is reclined. This can be dangerous. The shoulder belt will not be against your body. In an accident, you could be thrown into it and receive neck or other serious injuries. You could also slide under the lap belt and receive serious internal injuries.**
- **For the most effective protection when the vehicle is in motion, the seat should be upright. Always sit well back and upright in the seat with both feet on the floor and adjust the seat belt properly. (See "Precautions on seat belt usage" (P.96).)**

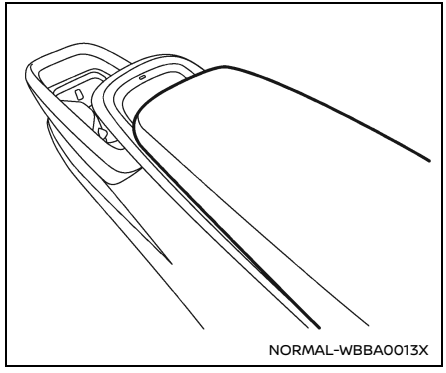

ARMREST

Front seats

The console box lid can be used as an armrest.

Rear seat (if so equipped)

The center seatback can be folded to make the armrest.

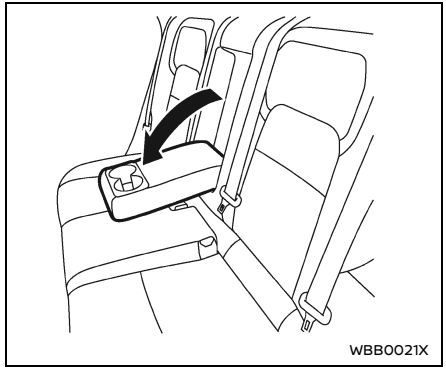

Fold down the seatback until it is horizontal.

HEAD RESTRAINTS/HEADRESTS

BASIC INFORMATION

⚠ WARNING

Head restraint/headrest supplement the other vehicle safety systems. They may provide additional protection against injury in certain rear end collisions. Adjustable head restraints/headrests must be adjusted properly, as specified in this section. Check the adjustment after someone else uses the seat. Do not attach anything to the head restraint/headrest stalks or remove the head restraint/headrest. Do not use the seat if the head restraint/headrest has been removed. If the head restraint/headrest was removed, reinstall and properly adjust the head restraint/headrest before an occupant uses the seating position. Failure to follow these instructions can reduce the effectiveness of the head restraint/headrest. This may increase the risk of serious injury or death in a collision.

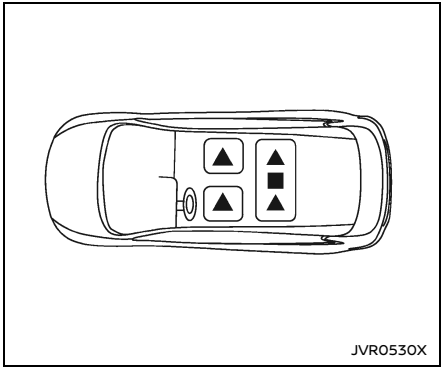

The illustration shows the seating positions equipped with head restraint/headrest.

▲ Indicates the seating position is equipped with a head restraint.

■ Indicates the seating position is equipped with a headrest.

+ Indicates the seating position is not equipped with a head restraint or headrest.

- Your vehicle is equipped with a head restraint/headrest that may be integrated, adjustable or non-adjustable.
- Adjustable head restraints/headrests have multiple notches along the stalk to lock them in a desired adjustment position.
- The non-adjustable head restraints/headrests have a single locking notch to secure them to the seat frame.
- Proper Adjustment:
  - For the adjustable type, align the head restraint/headrest so the center of your ear is approximately level with the center of the head restraint/headrest.
  - If your ear position is still higher than the recommended alignment, place the head restraint/headrest at the highest position.
- If the head restraint/headrest has been removed, ensure that it is reinstalled and locked in place before riding in that designated seating position.

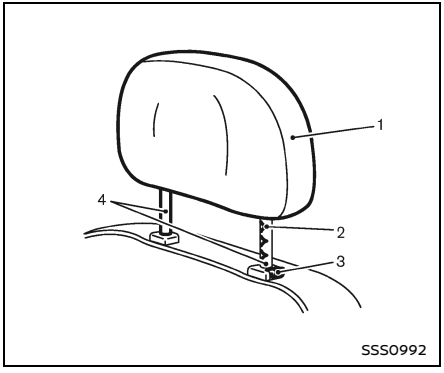

ADJUSTABLE HEAD RESTRAINT/ HEADREST COMPONENTS

1. Removable head restraint/headrest
2. Multiple notches
3. Lock knob
4. Stalks

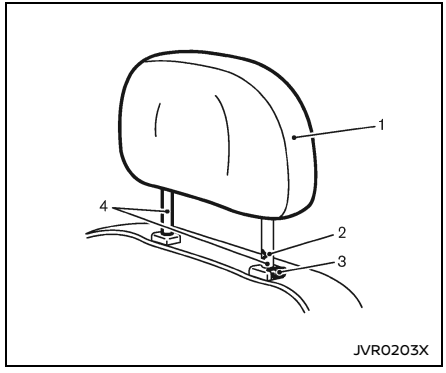

NON-ADJUSTABLE HEAD RESTRAINT/HEADREST COMPONENTS

1. Removable head restraint/headrest
2. Single notch
3. Lock knob
4. Stalks

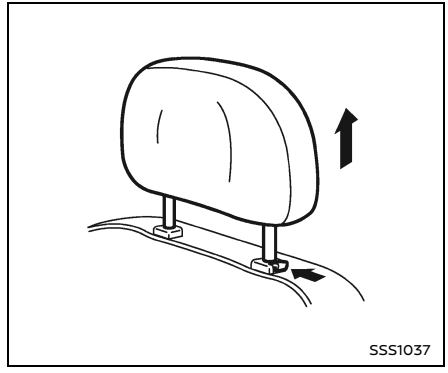

REMOVE

Use the following procedure to remove the head restraint/headrest.

1. Pull the head restraint/headrest up to the highest position.
2. Push and hold the lock knob.
3. Remove the head restraint/headrest from the seat.
4. Store the head restraint/headrest properly in a secure place so it is not loose in the vehicle.
5. Reinstall and properly adjust the head restraint/headrest before an occupant uses the seating position.

⚠ CAUTION

- **The front head restraints with a speaker are not designed to be pulled out. The speaker may be damaged if the head restraint is forcibly pulled out.**

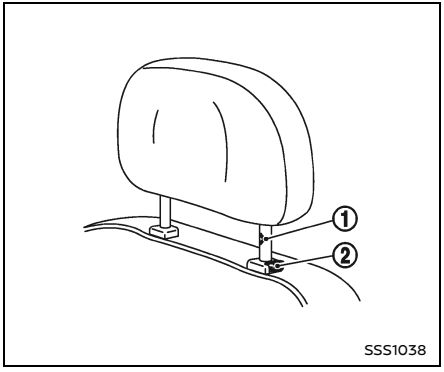

INSTALL

1. Align the head restraint/headrest stalks with the holes in the seat. Make sure that the head restraint/headrest is facing the correct direction. The stalk with the adjustment notch ① must be installed in the hole with the lock knob ②.
2. Push and hold the lock knob and push the head restraint/headrest down.
3. Properly adjust the head restraint/headrest before an occupant uses the seating position.

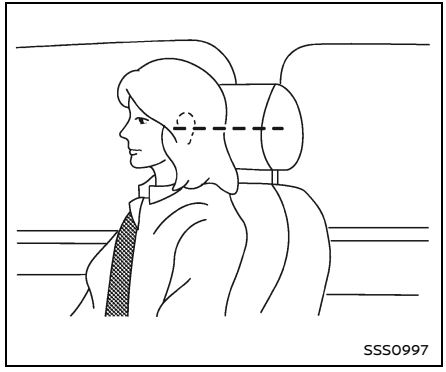

ADJUST

Adjust

For adjustable head restraint/headrest

Adjust the head restraint/headrest so the center is level with the center of your ears. If your ear position is still higher than the recommended alignment, place the head restraint/headrest at the highest position.

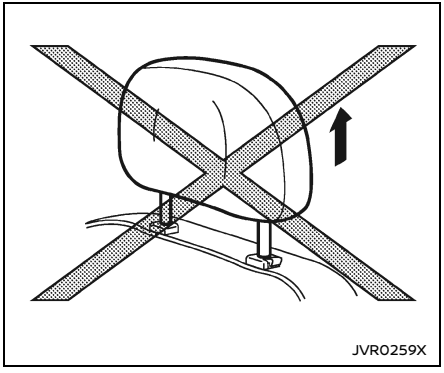

For non-adjustable head restraint/headrest

Make sure the head restraint/headrest is positioned so the lock knob is engaged in the notch before riding in that designated seating position.

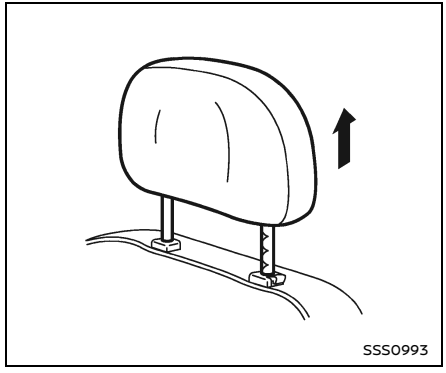

Raise

To raise the head restraint/headrest, pull it up.

Make sure the head restraint/headrest is positioned so the lock knob is engaged in the notch before riding in that designated seating position.

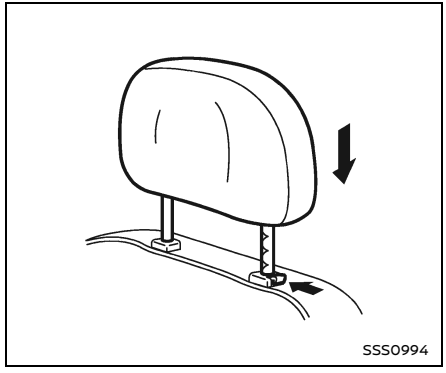

Lower

To lower, push and hold the lock knob and push the head restraint/headrest down.

Make sure the head restraint/headrest is positioned so the lock knob is engaged in the notch before riding in that designated seating position.

PRECAUTIONS ON SEAT BELT USAGE

If you are wearing your seat belt properly adjusted, and you are sitting upright and well back in your seat with both feet on the floor, your chances of being injured or killed in an accident and/or the severity of injury may be greatly reduced. NISSAN strongly encourages you and all of your passengers to buckle up every time you drive, even if your seating position includes a supplemental air bag.

Most U.S. states and Canadian provinces or territories specify that seat belts be worn at all times when a vehicle is being driven.

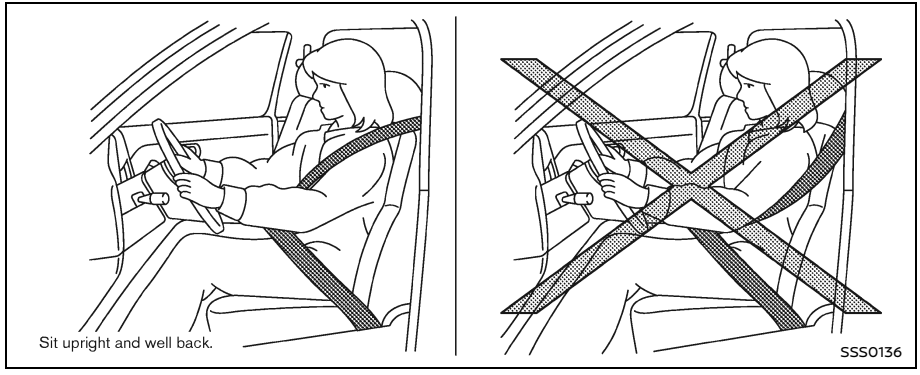

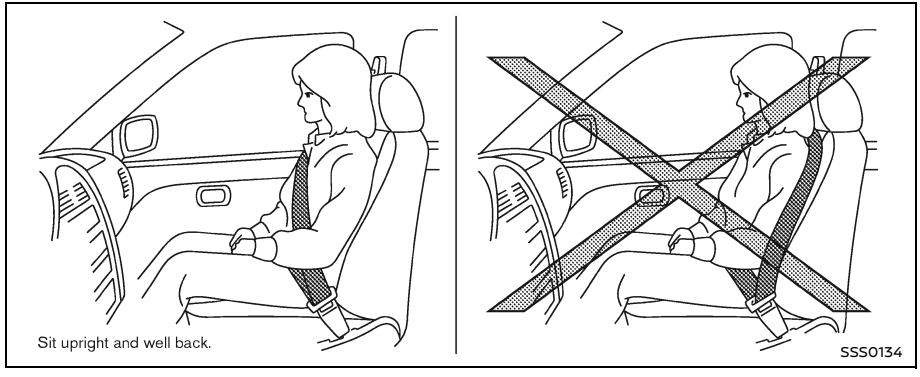

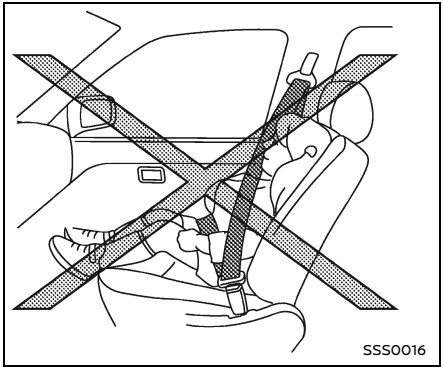

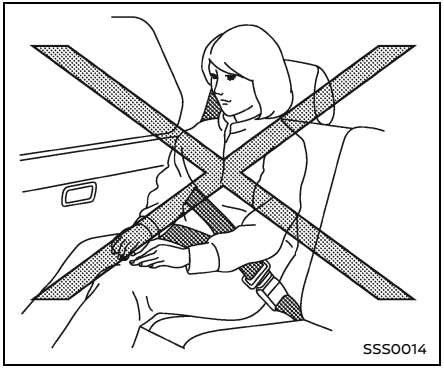

WARNING

- **Every person who drives or rides in this vehicle should use a seat belt at all times. Children should be properly restrained in the rear seat and, if appropriate, in a child restraint.**
- **The seat belt should be properly adjusted to a snug fit. Failure to do so may reduce the effectiveness of the entire restraint system and increase the chance or severity of injury in an accident. Serious injury or death can occur if the seat belt is not worn properly.**
- **Always route the shoulder belt over your shoulder and across your chest. Never put the belt behind your back, under your arm or across your neck. The belt should be away from your face and neck, but not falling off your shoulder.**
- **Position the lap belt as low and snug as possible AROUND THE HIPS, NOT THE WAIST. A lap belt worn too high could increase the risk of internal injuries in an accident.**
- **Be sure the seat belt tongue is securely fastened to the proper buckle.**
- **Do not wear the seat belt inside out or twisted. Doing so may reduce its effectiveness.**
- **Do not allow more than one person to use the same seat belt.**
- **Never carry more people in the vehicle than there are seat belts.**
- **If the seat belt warning light glows continuously while the power switch is ON with all doors closed and all seat belts fastened, it may indicate a malfunction in the system. Have the system checked. It is recommended you visit a NISSAN certified LEAF dealer for this service.**
- **No changes should be made to the seat belt system. For example, do not modify the seat belt, add material, or install devices that may change the seat belt routing or tension. Doing so may affect the operation of the seat belt system. Modifying or tampering with the seat belt system may result in serious personal injury.**

- **Once a seat belt pretensioner has activated, it cannot be reused and must be replaced together with the retractor. It is recommended you visit a NISSAN certified LEAF dealer for this service.**
- **All seat belt assemblies, including retractors and attaching hardware, should be inspected after any collision. It is recommended you visit a NISSAN certified LEAF dealer for this service. NISSAN recommends that all seat belt assemblies in use during a collision be replaced unless the collision was minor and the belts show no damage and continue to operate properly. Seat belt assemblies not in use during a collision should also be inspected and replaced if either damage or improper operation is noted.**
- **All child restraints and attaching hardware should be inspected after any collision. Always follow the restraint manufacturer's inspection instructions and replacement recommendations. The child restraints should be replaced if they are damaged.**

SEAT BELT WARNING LIGHT AND CHIME

The driver and front passenger seats are equipped with an enhanced seat belt reminder function. If your vehicle is equipped with an enhanced seat belt reminder function, a visual and audible alert will operate if a driver or front passenger seat belt is unbuckled at speeds of approximately 10 MPH (15 km/h) or more under the following conditions:

- If the driver seat belt is not fastened.
- The front passenger's seat belt is not fastened and the seat is occupied by a passenger for 7 seconds after the power switch is placed in the ON position.
- The front passenger's seat belt is not fastened and objects or external force on the passenger seat change the seat belt reminder classification to "occupied".

The seat belt warning light will flash under the conditions shown above until the necessary seat belt is securely fastened.

A warning chime will sound for approximately 95 seconds or until one of the following conditions is met:

- The unbuckled front passenger's seat belt is securely fastened.
- The seat belt reminder function in the front passenger seat no longer detects that the front passenger seat is occupied.
- The power switch is turned off.

The below situations could result in the seat belt warning light being illuminated and the chime sounding, even with no occupant present in the passenger seat:

- Heavy objects placed on the seat.
- Someone pushing or pulling on the front passenger seat.
- An object placed under the front passenger seat.

- An object placed between the seat cushion and center console or between the seat cushion and the door.
- An object hanging on the seat or placed in the seatback pocket.
- A child restraint or other object pressing against the rear of the seatback.

The rear seats may be equipped with a seat belt warning in the vehicle information display. (See "Rear seat belt warning" (P.180).)

PREGNANT WOMEN

NISSAN recommends that pregnant women use seat belts. The seat belt should be worn snug, and always position the lap belt as low as possible around the hips, not the waist. Place the shoulder belt over your shoulder and across your chest. Never put the lap/shoulder belt over your abdominal area. Contact your doctor for specific recommendations.

INJURED PERSONS

NISSAN recommends that injured persons use seat belts, depending on the injury. Check with your doctor for specific recommendations.

REAR CENTER SEAT BELTS

Selecting correct set of seat belts

The center seat belt tongue can be fastened only into the center seat belt buckle.

THREE-POINT TYPE SEAT BELT WITH RETRACTOR

Basic information

WARNING

- **Every person who drives or rides in this vehicle should use a seat belt at all times. Children should be in the rear seats and in an appropriate restraint.**
- **Do not ride in a moving vehicle when the seatback is reclined. This can be dangerous. The shoulder belt will not be against your body. In an accident, you could be thrown into it and receive neck or other serious injuries. You could also slide under the lap belt and receive serious internal injuries.**
- **For the most effective protection when the vehicle is in motion, the seat should be upright. Always sit well back and upright in the seat with both feet on the floor and adjust the seat belt properly.**
- **Do not allow children to play with the seat belts. Most seating positions are equipped with Automatic Locking Retractor (ALR) mode seat belts. If the seat belt becomes wrapped around a child's neck with the ALR mode activated, the child can be seriously injured or killed if the seat belt retracts and becomes tight. This can occur even if the vehicle is parked. Unbuckle the seat belt to release the child. If the seat belt can not be unbuckled or is already unbuckled, release the child by cutting the seat belt with a suitable tool (such as a knife or scissors) to release the seat belt.**

Fastening the seat belts

1. Adjust the seat. (See "Front seats" (P.86) and "Rear seats" (P.89).)

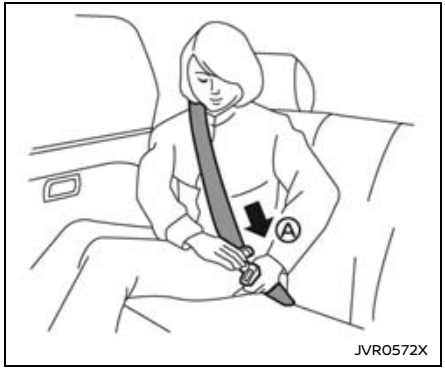

2. Slowly pull the seat belt out of the retractor and insert the tongue into the buckle Ⓐ until you hear and feel the latch engage.
   - **The retractor is designed to lock during a sudden stop or on impact. A slow pulling motion permits the belt to move and allows you some freedom of movement in the seat.**
   - **If the seat belt cannot be pulled from its fully retracted position, firmly pull the belt and release it. Then smoothly pull the belt out of the retractor.**

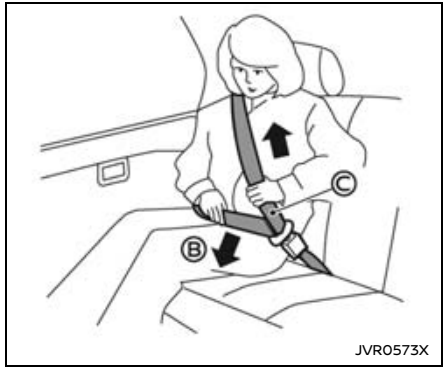

3. Position the lap belt portion **low and snug on the hips** Ⓑ as shown.
4. Pull the shoulder belt portion toward the retractor to take up extra slack Ⓒ. Be sure the shoulder belt is routed over your shoulder and across your chest.

The three-point seat belts in the front passenger seat and the rear seating positions have two modes of operation:

- Emergency Locking Retractor (ELR)
- Automatic Locking Retractor (ALR)

The Emergency Locking Retractor (ELR) mode allows the seat belt to extend and retract to allow the driver and passengers some freedom of movement in the seat. The ELR locks the seat belt when the vehicle slows down rapidly or during certain impacts.

The Automatic Locking Retractor (ALR) mode (child restraint mode) locks the seat belt for child restraint installation.

When ALR mode is activated the seat belt cannot be extended again until the seat belt tongue is detached from the buckle and fully retracted. The seat belt returns to the ELR mode after the seat belt fully retracts. For additional information, see "Child restraints" (P.106).

The ALR mode should be used only for child restraint installation. During normal seat belt use by an occupant, the ALR mode should not be activated. If it is activated, it may cause uncomfortable seat belt tension. It can also change the operation of the front passenger air bag.

⚠ WARNING

When fastening the seat belts, be certain that seatbacks are completely secured in the latched position. If they are not completely secured, passengers may be injured in an accident or sudden stop.

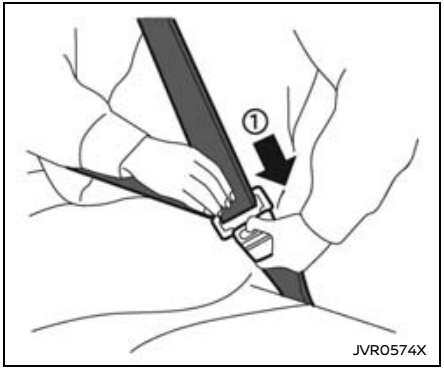

Unfastening the seat belts

To unfasten the seat belt, push the button on the buckle ①. The seat belt automatically retracts.

Checking seat belt operation

Seat belt retractors are designed to lock seat belt movement by two separate methods:

- When the belt is pulled quickly from the retractor.
- When the vehicle slows down rapidly.

To increase your confidence in the seat belts, check the operation as follows:

- Grasp the shoulder belt and pull forward quickly. The retractor should lock and restrict further belt movement.

If the retractor does not lock during this check, get the system checked. It is recommended you visit a NISSAN certified LEAF dealer for this service, or to learn more about seat belt operation.

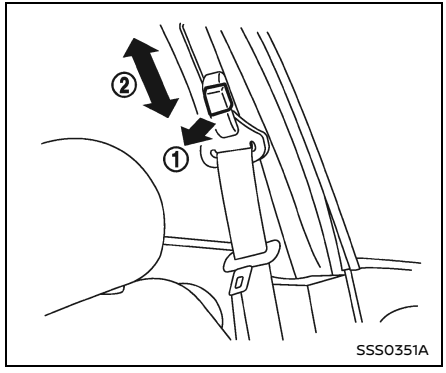

Shoulder belt height adjustment (for front seats)

The shoulder belt anchor height should be adjusted to the position best for you. (See "Precautions on seat belt usage" (P.96).)

To adjust, pull the adjustment button ①, and then move the shoulder belt anchor to the desired position ②, so that the belt passes over the center of the shoulder. The belt should be away from your face and neck, but not falling off of your shoulder. Release the adjustment button to lock the shoulder belt anchor into position.

The range of height adjustment of the shoulder belt may vary depending on the model.

WARNING

- **After adjustment, release the adjustment button and try to move the shoulder belt anchor up and down to make sure it is securely fixed in position.**
- **The shoulder belt anchor height should be adjusted to the position best for you. Failure to do so may reduce the effectiveness of the entire restraint system and increase the chance or severity of injury in an accident.**

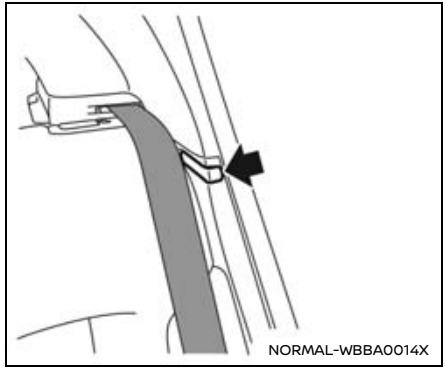

Seat belt hook

When the seat belt is not in use and when folding down the rear seats, hook the rear outer seat belts on the seat belt hooks.

WARNING

- **Before folding up the rear seats, ensure the seat belts are not obstructing the rear seatback latches to avoid damage to the seat belt webbing.**
- **Make sure the seat belts are not routed behind the seat when they are folded up by putting the belts back into the seat belt guide.**

SEAT BELT EXTENDERS

If, because of body size or driving position, it is not possible to properly fit the lap/shoulder belt and fasten it, an extender that is compatible with the installed seat belts is available that can be purchased. The extender adds approximately 8 in (200 mm) of length and may be used for either the driver or front passenger seating position. It is recommended you visit a NISSAN certified LEAF dealer for assistance with purchasing an extender if an extender is required.

WARNING

- **It is recommended that only NISSAN seat belt extenders, made by the same company which made the original equipment seat belts, be used with NISSAN seat belts.**
- **Adults and children who can use the standard seat belt should not use an extender. Such unnecessary use could result in serious personal injury in the event of an accident.**

- **Never use seat belt extenders to install child restraints. If the child restraint is not secured properly, the child could be seriously injured or killed in a collision or a sudden stop.**

SEAT BELT MAINTENANCE

- **To clean the seat belt webbing,** apply a mild soap solution or any solution recommended for cleaning upholstery or carpets. Then wipe with a cloth and allow the seat belts to dry in the shade. Do not allow the seat belts to retract until they are completely dry.
- **If dirt builds up in the shoulder belt guide** of the seat belt anchors, the seat belts may retract slowly. Wipe the shoulder belt guide with a clean, dry cloth.
- **Periodically check to see that the seat belt and the metal components**, such as buckles, tongues, retractors, flexible wires and anchors, work properly. If loose parts, deterioration, cuts or other damage on the webbing is found, the entire seat belt assembly should be replaced.

BASIC INFORMATION

WARNING

Do not allow children to play with the seat belts. Most seating positions are equipped with Automatic Locking Retractor (ALR) mode seat belts. If the seat belt becomes wrapped around a child's neck with the ALR mode activated, the child can be seriously injured or killed if the seat belt retracts and becomes tight. This can occur even if the vehicle is parked. Unbuckle the seat belt to release the child. If the seat belt can not be unbuckled or is already unbuckled, release the child by cutting the seat belt with a suitable tool (such as a knife or scissors) to release the seat belt.

Children need adults to help protect them.

They need to be properly restrained.

In addition to the general information in this manual, child safety information is available from many other sources, including doctors, teachers, government traffic safety offices, and community organizations. Every child is different, so be sure to learn the best way to transport your child.

There are three basic types of child restraint systems:

- Rear-facing child restraint
- Forward-facing child restraint
- Booster seat

The proper restraint depends on the child's size. Generally, infants up to about 1 year and less than 20 lbs (9 kg) should be placed in rear-facing child restraints. Forward-facing child restraints are available for children who outgrow rear-facing child restraints and are at least 1 year old. Booster seats are used to help position a vehicle lap/shoulder belt on a child who can no longer use a forward-facing child restraint.

WARNING

Infants and children need special protection. The vehicle's seat belts may not fit them properly. The shoulder belt may come too close to the face or neck. The lap belt may not fit over their small hip bones. In an accident, an improperly fitting seat belt could cause serious or fatal injury. Always use appropriate child restraints.

All U.S. states and Canadian provinces or territories require the use of approved

child restraints for infants and small children. See "Child restraints" (P.106).

A child restraint may be secured in the vehicle by using either the LATCH (Lower Anchors and Tethers for CHildren) system or with the vehicle seat belt. See "Child restraints" (P.106) for more information.

NISSAN recommends that all pre-teens and children be restrained in the rear seat. Studies show that children are safer when properly restrained in the rear seat than in the front seat.

This is especially important because your vehicle has a supplemental restraint system (Air bag system) for the front passenger. See "Supplemental Restraint System (SRS)" (P.127).

INFANTS

Infants up to at least 1 year old should be placed in a rear-facing child restraint. NISSAN recommends that infants be placed in child restraints that comply with Federal Motor Vehicle Safety Standards or Canadian Motor Vehicle Safety Standards. You should choose a child restraint that fits your vehicle and always follow the manufacturer's instructions for installation and use.

SMALL CHILDREN

Children that are over 1 year old and weigh at least 20 lbs (9 kg) should remain in a rear-facing child restraint as long as possible up to the height or weight limit of the child restraint. Children who outgrow the height or weight limit of the rear-facing child restraint and are at least 1 year old should be secured in a forward-facing child restraint with a harness. Refer to the manufacturer's instructions for minimum and maximum weight and height recommendations. NISSAN recommends that small children be placed in child restraints that comply with Federal Motor Vehicle Safety Standards or Canadian Motor Vehicle Safety Standards. You should choose a child restraint that fits your vehicle and always follow the manufacturer's instructions for installation and use.

LARGER CHILDREN

Children should remain in a forward-facing child restraint with a harness until they reach the maximum height or weight limit allowed by the child restraint manufacturer.

Once a child outgrows the height or weight limit of the harness-equipped forward-facing child restraint, NISSAN recommends that the child be placed in a commercially available booster seat to obtain proper seat belt fit. For a seat belt to fit properly, the booster seat should raise the child so that the shoulder belt is properly positioned across the chest and the top, middle portion of the shoulder. The shoulder belt should not cross the neck or face and should not fall off the shoulder. The lap belt should lie snugly across the lower hips or upper thighs, not the abdomen.

A booster seat can only be used in seating positions that have a three-point type seat belt. The booster seat should fit the vehicle seat and have a label certifying that it complies with Federal Motor Vehicle Safety Standards or Canadian Motor Vehicle Safety Standards.

A booster seat should be used until the child can pass the seat belt fit test below:

- Are the child's back and hips against the vehicle seatback?
- Is the child able to sit without slouching?
- Do the child's knees bend easily over the front edge of the seat with feet flat on the floor?
- Can the child safely wear the seat belt (lap belt low and snug across the hips and shoulder belt across mid-chest and shoulder)?
- Is the child able to use the properly adjusted head restraint/headrest?

- Will the child be able to stay in position for the entire ride?

If you answered no to any of these questions, the child should remain in a booster seat using a three-point type seat belt.

NOTE:
Laws in some communities may follow different guidelines. Check local and state regulations to confirm your child is using the correct restraint system before traveling.

WARNING

Never let a child stand or kneel on any seat and do not allow a child in the cargo area. The child could be seriously injured or killed in a sudden stop or collision.

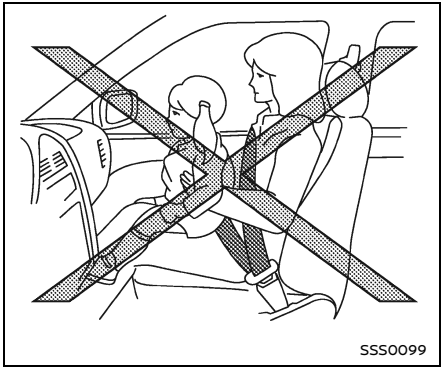
SSS0099

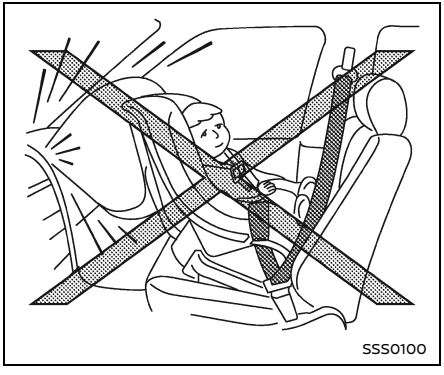
SSS0100

BASIC INFORMATION

PRECAUTIONS ON CHILD RESTRAINTS

WARNING

- **Failure to follow the warnings and instructions for proper use and installation of child restraints could result in serious injury or death of a child or other passengers in a sudden stop or collision:**
  - **The child restraint must be used and installed properly. Always follow all of the child restraint manufacturer's instructions for installation and use.**
  - **Infants and children should never be held on anyone's lap. Even the strongest adult cannot resist the forces of a collision.**
  - **Do not put a seat belt around both a child and another passenger.**
  - **NISSAN recommends that all child restraints be installed in the rear seat. Studies show that children are safer when properly restrained in the rear seat than in the front seat. If you must install a forward-facing child restraint in the front seat, see "Forward-facing child restraint installation using the seat belts" (P.119).**
  - **Even with the NISSAN Advanced Air Bag System, never install a rear-facing child restraint in the front seat. An inflating air bag could seriously injure or kill a child. A rear-facing child restraint must only be used in the rear seat.**
  - **Be sure to purchase a child restraint that will fit the child and vehicle. Some child restraints may not fit properly in your vehicle.**

- **Child restraint anchorages are designed to withstand only those loads imposed by correctly fitted child restraints. Under no circumstances are they to be used to attach adult seat belts, or other items or equipment to the vehicle. Doing so could damage the child restraint anchorages. The child restraint will not be properly installed using the damaged anchorage, and a child could be seriously injured or killed in a collision.**
- **Never use the anchor points for adult seat belts or harnesses.**
- **A child restraint with a top tether strap should not be used in the front passenger seat.**
- **Keep seatbacks as upright as possible after fitting the child restraint.**
- **Infants and children should always be placed in an appropriate child restraint while in the vehicle.**

- **When the child restraint is not in use, keep it secured with the LATCH system or a seat belt. In a sudden stop or collision, loose objects can injure occupants or damage the vehicle.**

CAUTION

A child restraint in a closed vehicle can become very hot. Check the seating surface and buckles before placing a child in the child restraint.

This vehicle is equipped with a universal child restraint anchor system, referred to as the LATCH (Lower Anchors and Tethers for CHildren) system. Some child restraints include rigid or webbing-mounted attachments that can be connected to these anchors.

For details, see "Lower Anchors and Tethers for CHildren (LATCH) system" (P.108).

If you do not have a LATCH compatible child restraint, the vehicle seat belts can be used.

Several manufacturers offer child restraints for infants and small children of various sizes. When selecting any child restraint, keep the following points in mind:

- Choose only a restraint with a label certifying that it complies with Federal Motor Vehicle Safety Standard 213 or Canadian Motor Vehicle Safety Standard 213.
- Check the child restraint in your vehicle to be sure it is compatible with the vehicle's seat and seat belt system.
- If the child restraint is compatible with your vehicle, place your child in the child restraint and check the various adjustments to be sure the child restraint is compatible with your child. Choose a child restraint that is designed for your child's height and weight. Always follow all recommended procedures.
- If the combined weight of the child and child restraint is less than 65 lbs (29.5 kg), you may use either the LATCH anchors or the seat belt to install the child restraint (not both at the same time).
- If the combined weight of the child and child restraint is greater than 65 lbs (29.5 kg), use the vehicle's seat belt (not the lower anchors) to install the child restraint.

- Be sure to follow the child restraint manufacturer's instructions for installation.

All U.S. states and Canadian provinces or territories require that infants and small children be restrained in an approved child restraint at all times while the vehicle is being operated. Canadian law requires the top tether strap on forward-facing child restraints be secured to the designated anchor point on the vehicle.

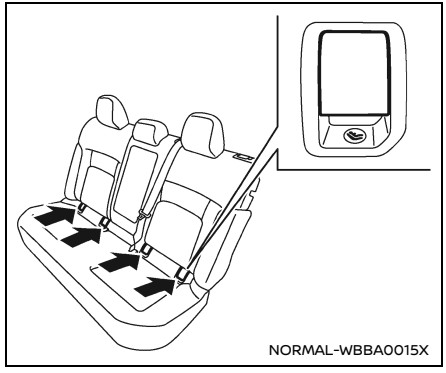

LATCH system anchor location

Lower Anchors and Tethers for CHildren (LATCH) SYSTEM

Basic information

Your vehicle is equipped with special anchor points that are used with LATCH system compatible child restraints. This system may also be referred to as the ISOFIX or ISOFIX compatible system. With this system, you do not have to use a vehicle seat belt to secure the child restraint unless the combined weight of the child and child restraint exceeds 65 lbs (29.5 kg). If the combined weight of the child and child restraint is greater than 65 lbs (29.5 kg), use the vehicle's seat belt (not the lower anchors) to install the child restraint. Be sure to follow the child restraint manufacturer's instructions for installation.

The LATCH anchor points can be used to install child restraints in the rear outboard seating positions.

LATCH lower anchor

WARNING

Failure to follow the warnings and instructions for proper use and installation of child restraints could result in serious injury or death of a child or other passengers in a sudden stop or collision:

- **Only attach LATCH system compatible child restraints to the Lower Anchors shown in the illustration. For additional information, refer to the following sections of this Owner's Manual for installation guidance.**
- **Attach LATCH system compatible child restraints only at the locations shown in the illustration.**

- **Inspect the lower anchors by inserting your fingers into the lower anchor area. Feel to make sure there are no obstructions over the anchors such as seat belt webbing or seat cushion material. The child restraint will not be secured properly if the lower anchors are obstructed.**
- **Child restraint anchorages are designed to withstand only those loads imposed by correctly fitted child restraints. Under no circumstances are they to be used to attach adult seat belts, or other items or equipment to the vehicle. Doing so could damage the child restraint anchorages. The child restraint will not be properly installed using the damaged anchorage, and a child could be seriously injured or killed in a collision.**

LATCH lower anchor location

The LATCH lower anchor points are provided to install child restraints in the rear seats. **Do not attempt to install child restraints in the center seating positions using the LATCH lower anchors.**

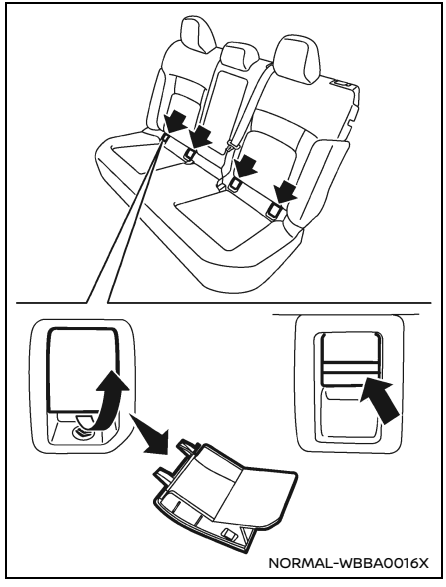

LATCH lower anchor removal

The LATCH lower anchor points are located under covers labelled ISOFIX at the bottom of the rear seat cushions. To access a LATCH lower anchor point, insert your finger into the cover and pull the cover off.

⚠ CAUTION

Store the loose LATCH covers (for example, in the console box) where they will not get damaged to avoid losing them. (See "Console box" (P.246).)

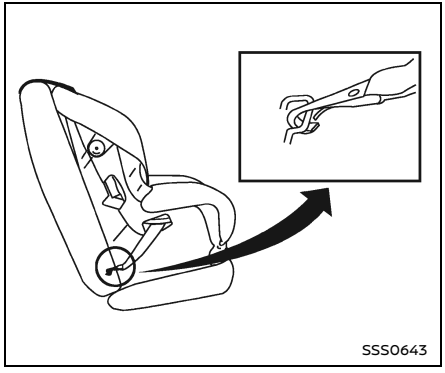

LATCH webbing-mounted attachment

Installing child restraint LATCH lower anchor attachments

LATCH compatible child restraints include two rigid or webbing-mounted attachments that can be connected to two anchors located at certain seating positions in your vehicle. With this system, you do not have to use a vehicle seat belt to secure the child restraint. Check your child restraint for a label stating that it is compatible with LATCH. This information may also be in the instructions provided by the child restraint manufacturer.

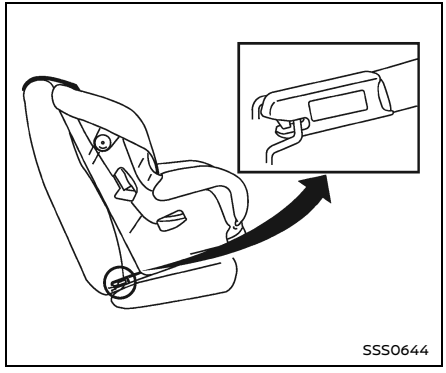

LATCH rigid-mounted attachment

When installing a child restraint, carefully read and follow the instructions in this manual and those supplied with the child restraint.

Top tether anchor

WARNING

Properly secure cargo and do not allow it to contact the top tether strap when it is attached to the top tether anchor. Cargo that is not properly secured or cargo that contacts the top tether strap may damage the top tether strap during a collision. Your child could be seriously injured or killed in a collision if the child restraint top tether strap is damaged.

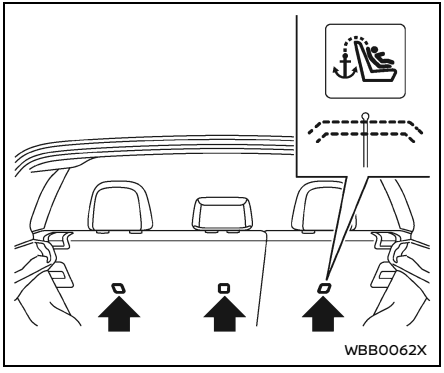

Top tether anchor point locations

WARNING

Child restraint anchorages are designed to withstand only those loads imposed by correctly fitted child restraints. Under no circumstances are they to be used to attach adult seat belts, or other items or equipment to the vehicle. Doing so could damage the child restraint anchorages. The child restraint will not be properly installed using the damaged anchorage, and a child could be seriously injured or killed in a collision.

Anchor points are located on the back side of the seatbacks.

If a child restraint has a top tether strap, it must be used when installing with the LATCH lower anchor attachments or seat belts as instructed by the child restraint manufacturer.

If you have any questions when installing a top tether strap child restraint on the rear seat, it is recommended you visit a NISSAN certified LEAF dealer for this service.

REAR-FACING CHILD RESTRAINT INSTALLATION USING LATCH

For additional information, refer to all Warnings and Cautions in the "Child safety" and "Child restraints" sections before installing a child restraint.

Do not use the lower anchors if the combined weight of the child and the child restraint exceeds 65 lbs (29.5 kg). If the combined weight of the child and the child restraint is greater than 65 lbs (29.5 kg), use the vehicle's seat belt (not the lower anchors) to install the child restraint. Be sure to follow the child restraint manufacturer's instructions for installation.

Follow these steps to install a rear-facing child restraint using the LATCH system:

1. Position the child restraint on the seat. Always follow the child restraint manufacturer's instructions.

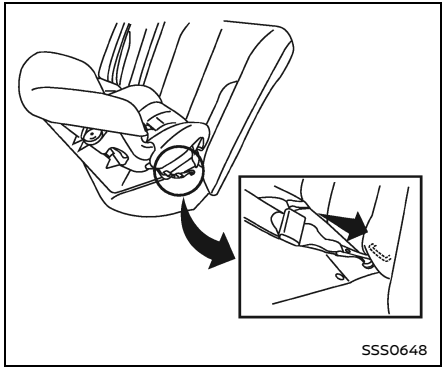

Rear-facing web-mounted — step 2

2. Secure the child restraint anchor attachments to the LATCH lower anchors. Check to make sure the LATCH attachment is properly attached to the lower anchors.

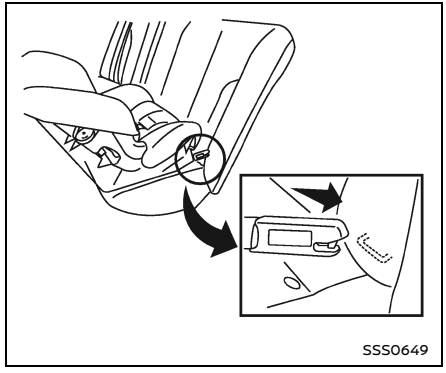

Rear-facing rigid-mounted — step 2

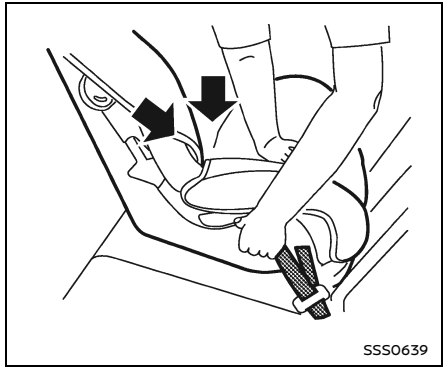

Rear-facing — step 3

3. For child restraints that are equipped with webbing-mounted attachments, remove any additional slack from the anchor attachments. Press downward and rearward firmly in the center of the child restraint with your hand to compress the vehicle seat cushion and seatback while tightening the webbing of the anchor attachments.

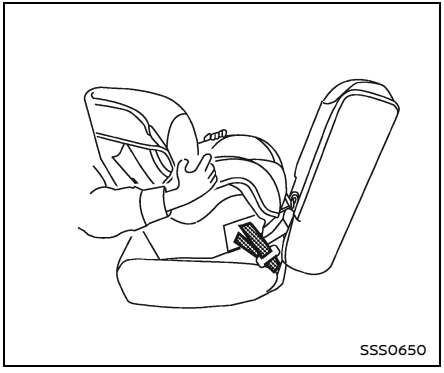

Rear-facing — step 4

4. After attaching the child restraint, test it before you place the child in it. Push it from side to side while holding the child restraint near the LATCH attachment path. The child restraint should not move more than 1 inch (25 mm), from side to side. Try to tug it forward and check to see if the LATCH attachment holds the restraint in place. If the restraint is not secure, tighten the LATCH attachment as necessary, or put the restraint in another seat and test it again. You may need to try a different child restraint or try installing by using the vehicle seat belt (if applicable). Not all child restraints fit in all types of vehicles.
5. Check to make sure the child restraint is properly secured prior to each use. If the child restraint is loose, repeat steps 1 through 4.

REAR-FACING CHILD RESTRAINT INSTALLATION USING THE SEAT BELTS

WARNING

The three-point seat belt with Automatic Locking Retractor (ALR) must be used when installing a child restraint. Failure to use the ALR mode will result in the child restraint not being properly secured. The restraint could tip over or be loose and cause injury to a child in a sudden stop or collision.

For additional information, refer to all Warnings and Cautions in the "Child safety" and "Child restraints" sections before installing a child restraint.

Do not use the lower anchors if the combined weight of the child and the child restraint exceeds 65 lbs (29.5 kg). If the combined weight of the child and the child restraint is greater than 65 lbs (29.5 kg), use the vehicle's seat belt (not the lower anchors) to install the child restraint. Be sure to follow the child restraint manufacturer's instructions for installation.

Follow these steps to install a rear-facing child restraint using the vehicle seat belts in the rear seats:

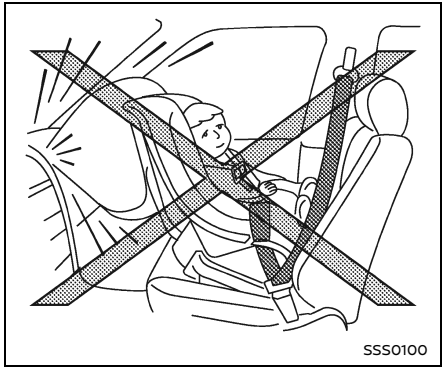

Rear-facing — step 1

1. **Child restraints for infants must be used in the rear-facing direction and therefore must not be used in the front seat.** Position the child restraint on the seat. Always follow the restraint manufacturer's instructions.

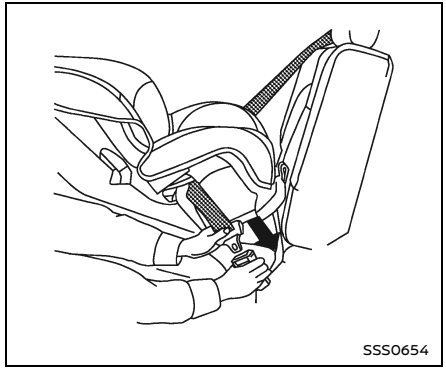

Rear-facing — step 2

2. Route the seat belt tongue through the child restraint and insert it into the buckle until you hear and feel the latch engage. Be sure to follow the child restraint manufacturer's instructions for belt routing.

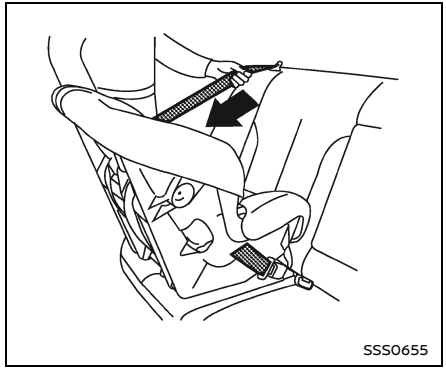

Rear-facing — step 3

3. Pull the shoulder belt until the belt is fully extended. At this time, the seat belt retractor is in the Automatic Locking Retractor (ALR) mode (child restraint mode). It reverts to the Emergency Locking Retractor (ELR) mode when the seat belt is fully retracted.

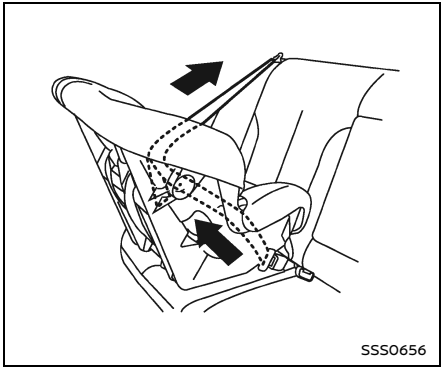

Rear-facing — step 4

4. Allow the seat belt to retract. Pull up on the shoulder belt to remove any slack in the belt.

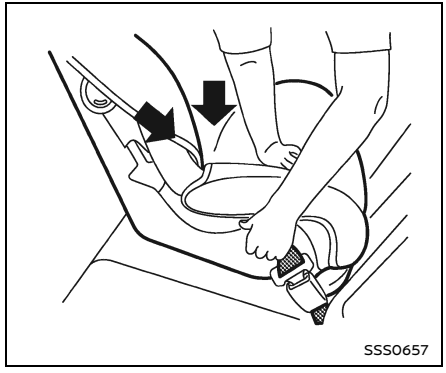

Rear-facing — step 5

5. Remove any additional slack from the seat belt; press downward and rearward firmly in the center of the child restraint to compress the vehicle seat cushion and seatback while pulling up on the seat belt.

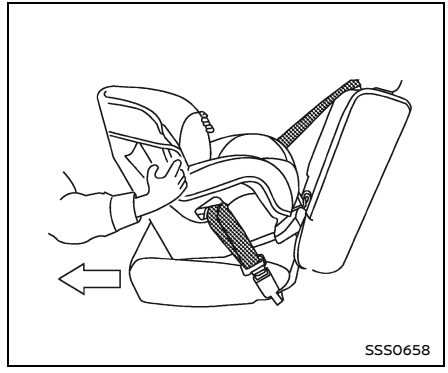

Rear-facing — step 6

6. After attaching the child restraint, test it before you place the child in it. Push it from side to side while holding the child restraint near the seat belt path. The child restraint should not move more than 1 inch (25 mm), from side to side. Try to tug it forward and check to see if the belt holds the restraint in place. If the restraint is not secure, tighten the seat belt as necessary, or put the restraint in another seat and test it again. You may need to try a different child restraint. Not all child restraints fit in all types of vehicles.
7. Check to make sure that the child restraint is properly secured prior to

each use. If the seat belt is not locked, repeat steps 1 through 6.

After the child restraint is removed and the seat belt fully retracted, the ALR mode (child restraint mode) is canceled.

FORWARD-FACING CHILD RESTRAINT INSTALLATION USING LATCH

Basic information

For additional information, refer to all Warnings and Cautions in the "Child safety" and "Child restraints" sections before installing a child restraint.

Do not use the lower anchors if the combined weight of the child and the child restraint exceeds 65 lbs (29.5 kg). If the combined weight of the child and the child restraint is greater than 65 lbs (29.5 kg), use the vehicle's seat belt (not the lower anchors) to install the child restraint. Be sure to follow the child restraint manufacturer's instructions for installation.

Follow these steps to install a forward-facing child restraint using the LATCH system:

1. Position the child restraint on the seat. Always follow the child restraint manufacturer's instructions.

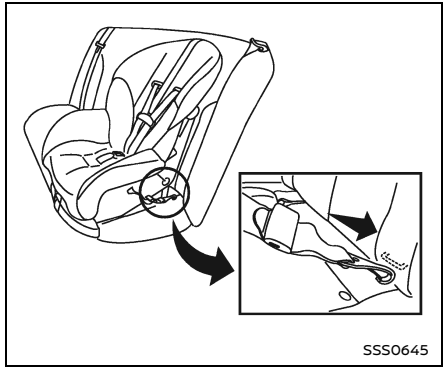

Forward-facing web-mounted — step 2

2. Secure the child restraint anchor attachments to the LATCH lower anchors. Check to make sure the LATCH attachment is properly attached to the lower anchors.

   If the child restraint is equipped with a top tether strap, route the top tether strap and secure the tether strap to the tether anchor point. See "Installing top tether strap" (P.118). Do not install child restraints that require the use of a top tether strap in seating positions that do not have a top tether anchor.

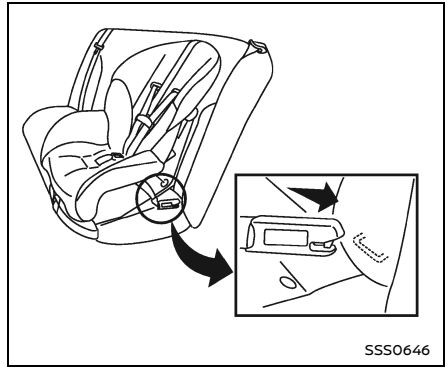

Forward-facing rigid-mounted — step 2

3. The back of the child restraint should be secured against the vehicle seat-back.

   If necessary, adjust or remove the head restraint/headrest to obtain the correct child restraint fit. If the head restraint/headrest is removed, store it in a secure place. **Be sure to reinstall the head restraint/headrest when the child restraint is removed.** See "Head restraints/headrests" (P.92) for head restraint/headrest adjustment information.

   If the seating position does not have an adjustable head restraint/headrest and it is interfering with the proper

child restraint fit, try another seating position or a different child restraint.

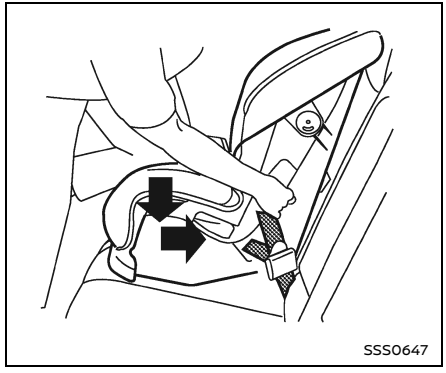

Forward-facing — step 4

4. For child restraints that are equipped with webbing-mounted attachments, remove any additional slack from the anchor attachments. Press downward and rearward firmly in the center of the child restraint with your knee to compress the vehicle seat cushion and seatback while tightening the webbing of the anchor attachments.
5. Tighten the tether strap according to the manufacturer's instructions to remove any slack.

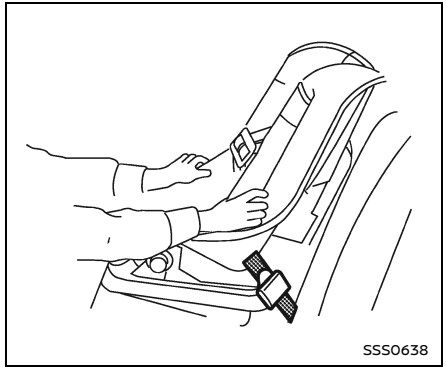

Forward-facing — step 6

6. After attaching the child restraint, test it before you place the child in it. Push it from side to side while holding the child restraint near the LATCH attachment path. The child restraint should not move more than 1 inch (25 mm), from side to side. Try to tug it forward and check to see if the LATCH attachment holds the restraint in place. If the restraint is not secure, tighten the LATCH attachment as necessary, or put the restraint in another seat and test it again. You may need to try a different child restraint. Not all child restraints fit in all types of vehicles.

7. Check to make sure the child restraint is properly secured prior to each use. If the child restraint is loose, repeat steps 1 through 6.

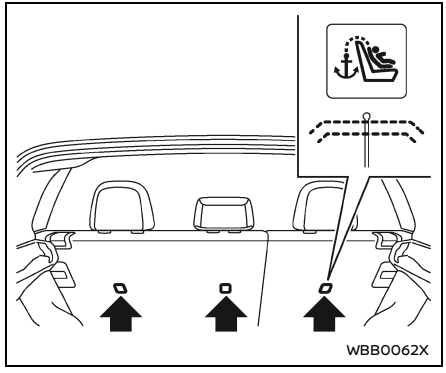

Installing top tether strap

WARNING

- **Child restraint anchorages are designed to withstand only those loads imposed by correctly fitted child restraints. Under no circumstances are they to be used to attach adult seat belts, or other items or equipment to the vehicle. Doing so could damage the child restraint anchorages. The child restraint will not be properly installed using the damaged anchorage, and a child could be seriously injured or killed in a collision.**
- **Do not hook the top tether strap on the seatback carpet. Be sure to use the tether anchor point to secure the top tether strap.**

The child restraint top tether strap must be used when installing forward-facing child restraint with the LATCH lower anchor attachments.

First, secure the child restraint with the LATCH lower anchors.

1. Remove the head restraint/headrest and store it in a secure place. Be sure to reinstall the head restraint/head-

rest when the child restraint is removed.

See "Head restraints/headrests" (P.92) for head restraint/headrest adjustment, removal and installation information.

2. Position the top tether strap as shown.
3. Secure the top tether strap to the tether anchor point as shown.
4. Refer to the appropriate child restraint installation procedure steps in this section before tightening the tether strap.

If you have any questions when installing a top tether strap, it is recommended that you visit a NISSAN certified LEAF dealer for this service.

FORWARD-FACING CHILD RESTRAINT INSTALLATION USING THE SEAT BELTS

Basic information

WARNING

The three-point seat belt with Automatic Locking Retractor (ALR) must be used when installing a child restraint. Failure to use the ALR mode will result in the child restraint not being properly secured. The restraint could tip over or be loose and cause injury to a child in a sudden stop or collision. Also, it can change the operation of the front passenger air bag. See "Front passenger air bag and status light" (P.136).

For additional information, refer to all Warnings and Cautions in the "Child safety" and "Child restraints" sections before installing a child restraint.

Do not use the lower anchors if the combined weight of the child and the child restraint exceeds 65 lbs (29.5 kg). If the combined weight of the child and the child restraint is greater than 65 lbs (29.5 kg), use the vehicle's seat belt (not the lower anchors) to install the child restraint. Be sure to follow the child restraint manufacturer's instructions for installation.

Follow these steps to install a forward-facing child restraint using the vehicle seat belt in the rear seats or in the front passenger seat:

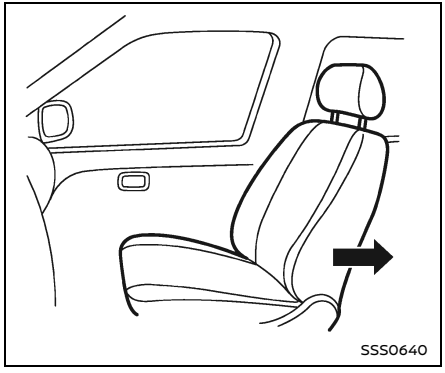

Forward-facing (front passenger seat) — step 1

1. **If you must install a child restraint in the front seat, it should be placed in a forward-facing direction only. Move the seat to the rearmost position. Child restraints for infants must be used in the rear-facing direction and, therefore, must not be used in the front seat.**

2. Position the child restraint on the seat. Always follow the child restraint manufacturer's instructions.

   The back of the child restraint should be secured against the vehicle seat-back.

   If necessary, adjust or remove the head restraint/headrest to obtain the correct child restraint fit. If the head restraint/headrest is removed, store it in a secure place. **Be sure to reinstall the head restraint/headrest when the child restraint is removed.** See "Head restraints/headrests" (P.92) for head restraint/headrest adjustment, removal and installation information.

   If the seating position does not have an adjustable head restraint/headrest and it is interfering with the proper child restraint fit, try another seating position or a different child restraint.

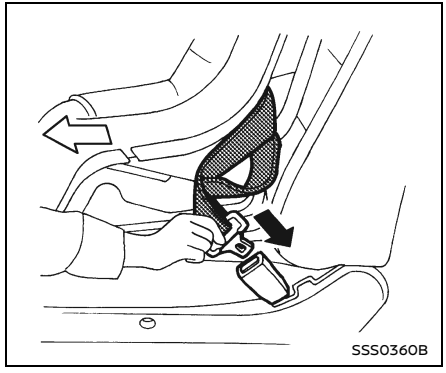

Forward-facing — step 3

3. Route the seat belt tongue through the child restraint and insert it into the buckle until you hear and feel the latch engage. Be sure to follow the child restraint manufacturer's instructions for belt routing.

   If the child restraint is equipped with a top tether strap, route the top tether strap and secure the tether strap to the tether anchor point (rear seat installation only). See "Installing top tether strap" (P.123). Do not install child restraints that require the use of a top tether strap in seating positions that do not have a top tether anchor.

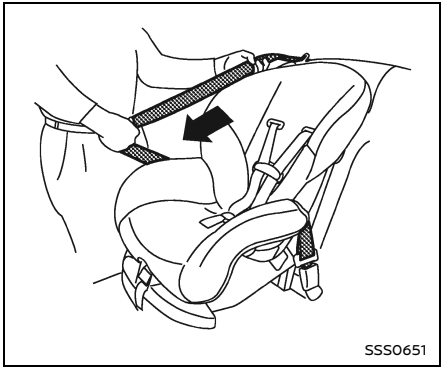

Forward-facing — step 4

4. Pull the shoulder belt until the belt is fully extended. At this time, the seat belt retractor is in the Automatic Locking Retractor (ALR) mode (child restraint mode). It reverts to Emergency Locking Retractor (ELR) mode when the seat belt is fully retracted.

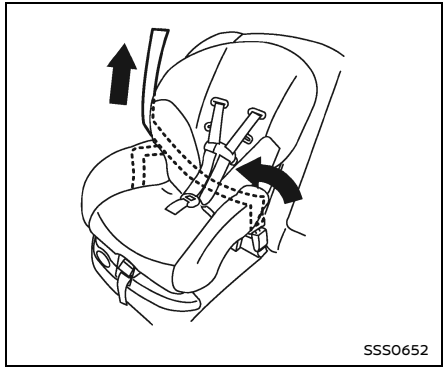

Forward-facing — step 5

5. Allow the seat belt to retract. Pull up on the shoulder belt to remove any slack in the belt.

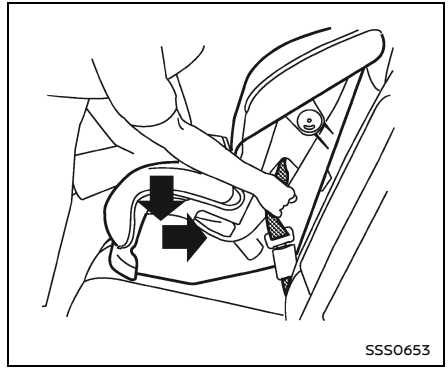

Forward-facing — step 6

6. Remove any additional slack from the seat belt; press downward and rearward firmly in the center of the child restraint with your knee to compress the vehicle seat cushion and seatback while pulling up on the seat belt.
7. Tighten the tether strap according to the manufacturer's instructions to remove any slack.

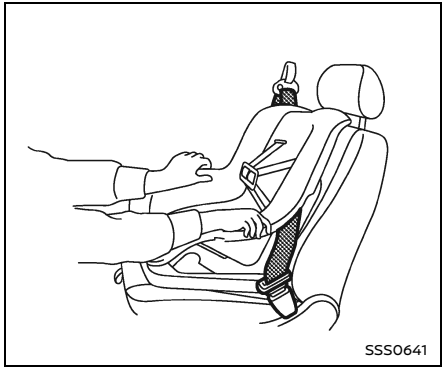

Forward-facing — step 8

8. After attaching the child restraint, test it before you place the child in it. Push it from side to side while holding the child restraint near the seat belt path. The child restraint should not move more than 1 inch (25 mm), from side to side. Try to tug it forward and check to see if the belt holds the restraint in place. If the restraint is not secure, tighten the seat belt as necessary, or put the restraint in another seat and test it again. You may need to try a different child restraint. Not all child restraints fit in all types of vehicles.
9. Check to make sure the child restraint is properly secured prior to each use. If the seat belt is not locked, repeat steps 2 through 8.

Forward-facing — step 10

10. If the child restraint is installed in the front passenger seat, place the power switch in the ON position. The front passenger air bag status light - should illuminate. If this light is not illuminated, see "Front passenger air bag and status light" (P.136). **Move the child restraint to another seating position.** Have the system checked. It is recommended you visit a NISSAN certified LEAF dealer for this service.

After the child restraint is removed and the seat belt is fully retracted, the ALR mode (child restraint mode) is canceled.

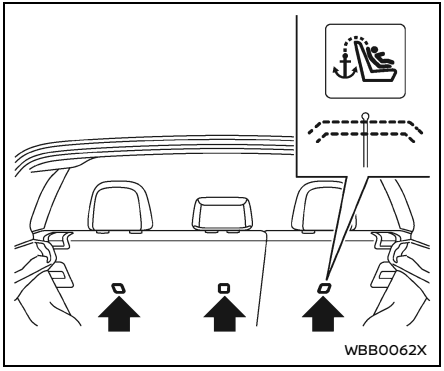

Installing top tether strap

WARNING

- **Child restraint anchorages are designed to withstand only those loads imposed by correctly fitted child restraints. Under no circumstances are they to be used to attach adult seat belts, or other items or equipment to the vehicle. Doing so could damage the child restraint anchorages. The child restraint will not be properly installed using the damaged anchorage, and a child could be seriously injured or killed in a collision.**
- **Do not hook the top tether strap on the seatback carpet. Be sure to use the tether anchor point to secure the top tether strap.**

The child restraint top tether strap must be used when installing forward-facing child restraint with the seat belts.

First, secure the child restraint with the seat belt.

1. Remove the head restraint/headrest and store it in a secure place. Be sure to reinstall the head restraint/headrest when the child restraint is removed.

   See "Head restraints/headrests" (P.92) for head restraint/headrest adjustment, removal and installation information.
2. Position the top tether strap as shown.
3. Secure the top tether strap to the tether anchor point as shown.
4. Refer to the appropriate child restraint installation procedure steps in this section before tightening the tether strap.

If you have any questions when installing a top tether strap, it is recommended you visit a NISSAN certified LEAF dealer for this service.

BOOSTER SEATS

Basic information

For additional information on installing a booster seat in your vehicle, follow the instructions outlined in this section.

Precautions on booster seats

WARNING

If a booster seat and seat belt are not used properly, the risk of a child being injured or killed in a sudden stop or collision greatly increases:

- **Make sure the shoulder portion of the belt is away from the child's face and neck and the lap portion of the belt does not cross the stomach.**
- **Make sure the shoulder belt is not behind the child or under the child's arm.**
- **A booster seat must only be installed in a seating position that has a lap/shoulder belt.**

Booster seats of various sizes are offered by several manufacturers. When selecting any booster seat, keep the following points in mind:

- Choose only a booster seat with a label certifying that it complies with Federal Motor Vehicle Safety Standard 213 or Canadian Motor Vehicle Safety Standard 213.
- Check the booster seat in your vehicle to be sure it is compatible with the vehicle's seat and seat belt system.

LRS0453

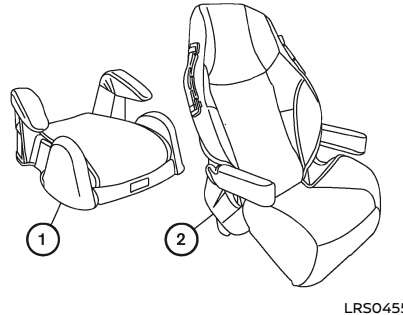

LRS0455

- Make sure the child's head will be properly supported by the booster seat or vehicle seat. The seatback must be at or above the center of the child's ears. For example, if a low back booster seat ① is chosen, the vehicle seatback must be at or above the center of the child's ears. If the seatback is lower than the center of the child's ears, a high back booster seat ② should be used.
- If the booster seat is compatible with your vehicle, place your child in the booster seat and check the various adjustments to be sure the booster seat is compatible with your child. Always follow all recommended procedures.

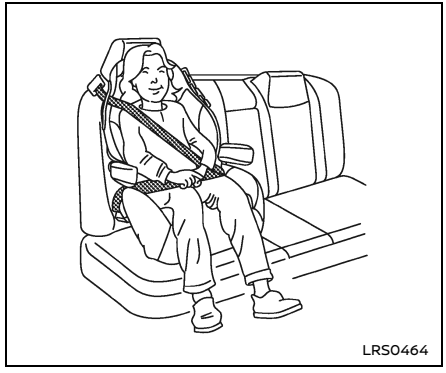

All U.S. states and Canadian provinces or territories require that infants and small children be restrained in an approved child restraint at all times while the vehicle is being operated.

The instructions in this section apply to booster seat installation in the rear seats or the front passenger seat.

Booster seat installation

⚠ WARNING

To avoid injury to child, do not use the lap/shoulder belt Automatic Locking Retractor (ALR) mode when using a booster seat with the seat belts.

For additional information, refer to all Warnings and Cautions in the "Child safety", "Child restraints" and "Booster seats" sections earlier in this section before installing a child restraint.

Follow these steps to install a booster seat in the rear seat or in the front passenger seat:

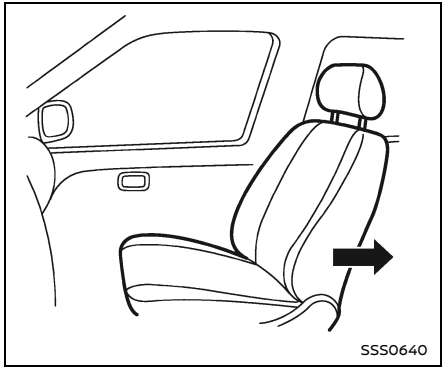

1. **If you must install a booster seat in the front seat, move the seat to the rearmost position.**
2. Position the booster seat on the seat. Only place it in a forward-facing direction. Always follow the booster seat manufacturer's instructions.

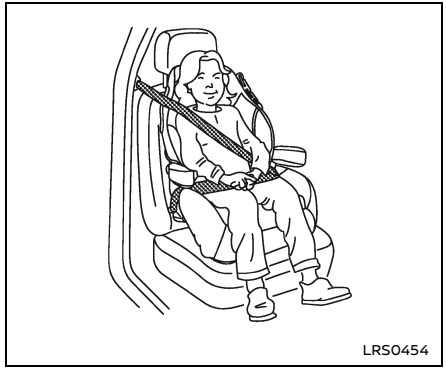

Front passenger position

3. The booster seat should be positioned on the vehicle seat so that it is stable.

   If necessary, adjust or remove the head restraint/headrest to obtain the correct booster seat fit. If the head restraint/headrest is removed, store it in a secure place. **Be sure to reinstall the head restraint/headrest when the booster seat is removed.** See "Head restraints/headrests" (P.92) for head restraint/headrest adjustment, removal and installation information.

   If the head restraint/headrest of the seating position is interfering with the proper booster seat fit, try another seating position or a different booster seat.
4. Position the lap portion of the seat belt low and snug on the child's hips. Be sure to follow the booster seat manufacturer's instructions for adjusting the seat belt routing.
5. Pull the shoulder belt portion of the seat belt toward the retractor to take up extra slack. Be sure the shoulder belt is positioned across the top, middle portion of the child's shoulder. Be sure to follow the booster seat manufacturer's instructions for adjusting the seat belt routing.
6. Follow the warnings, cautions and instructions for properly fastening a seat belt shown in "Seat belts" (P.96).

7. If the booster seat is installed in the front passenger seat, place the power switch in the ON position. The front passenger air bag status light may or may not illuminate depending on the size of the child and the type of booster seat used. See "Front passenger air bag and status light" (P.136).

PRECAUTIONS ON SRS

This SRS section contains important information concerning the following systems:

- Driver and front passenger supplemental front-impact air bag (NISSAN Advanced Air Bag System)
- Driver and front passenger supplemental knee air bag
- Front seat-mounted side-impact supplemental air bag
- Rear outboard seat-mounted side-impact supplemental air bag
- Front central seat-mounted side-impact supplemental air bag (if so equipped)
- Roof-mounted curtain side-impact and rollover supplemental air bag
- Seat belt with pretensioner (front and rear outboard seats)

Supplemental front-impact air bag system: The NISSAN Advanced Air Bag System can help cushion the impact force to the head and chest of the driver and front passenger in certain frontal collisions.

Driver and front passenger supplemental knee air bag system: This system can help cushion the impact force to the driver's and front passenger's knees in certain collisions.

Front seat-mounted side-impact supplemental air bag system: This system can help cushion the impact force to the chest and pelvic area of the driver and front passenger in certain side impact collisions. The side air bag is designed to inflate on the side where the vehicle is impacted.

Rear outboard seat-mounted side-impact supplemental air bag system: This system can help cushion the impact force to the chest and pelvic area of the rear outboard seat passengers in certain side-impact collisions. The side air bags are designed to inflate on the side where the vehicle is impacted.

Front central seat-mounted side-impact supplemental air bag (if so equipped): This system can help cushion the impact force to the head area of the driver and front passenger in certain side-impact collisions. The front central side-impact air bag is designed to inflate in the front central area where the vehicle is impacted.

Roof-mounted curtain side-impact and rollover supplemental air bag system: This system can help cushion the impact force to the heads of occupants in front and rear outboard seating positions in certain side impact or rollover collisions. In a side-impact, the curtain air bags are

designed to inflate on the side where the vehicle is impacted. In a rollover, the curtain air bags on both sides are designed to inflate. Under both side-impact and rollover situations, the curtain air bags will remain inflated for a short period of time.

These supplemental restraint systems are designed to **supplement** the crash protection provided by the driver, passenger and rear outboard seat belts and are **not a substitute** for them. Seat belts should always be correctly worn and the occupant seated a suitable distance away from the steering wheel, instrument panel and door finishers. (See "Seat belts" (P.96) for instructions and precautions on seat belt usage.)

The supplemental air bags operate only when the power switch is in the ON position.

After the power is placed in the ON position, the supplemental air bag warning light illuminates. The supplemental air bag warning light will turn off after about 7 seconds if the systems are operational.

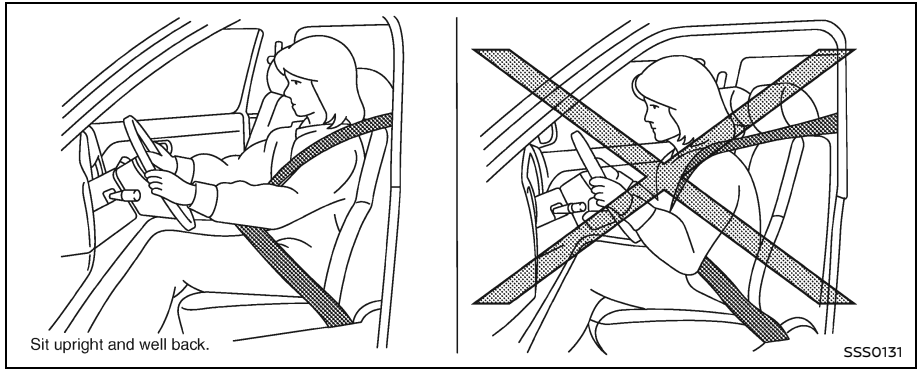

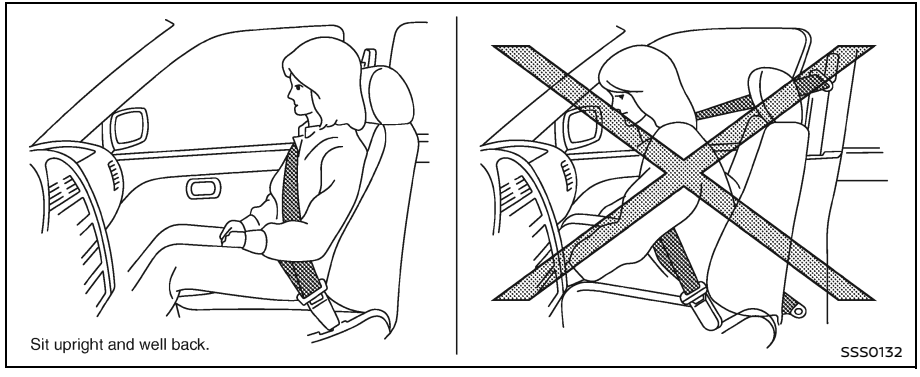

WARNING

- The front air bags ordinarily will not inflate in the event of a side impact, rear impact, rollover, or lower severity frontal collision. Always wear your seat belts to help reduce the risk or severity of injury in various kinds of accidents.
- The front passenger air bag and front passenger knee air bag will not inflate if the front passenger air bag status light is lit. See "Front passenger air bag and status light" (P.136).
- The seat belts and the front air bags are most effective when you are sitting well back and upright in the seat with both feet on the floor. The front air bags inflate with great force. Even with the NISSAN Advanced Air Bag System, if you are unrestrained, leaning forward, sitting sideways or out of position in any way, you are at greater risk of injury or death in a crash. You may also receive serious or fatal injuries from the front air bag if you are up against it when it inflates. Always sit back against the seatback and as far-away as practical from the steering wheel or instrument panel. Always properly use the seat belts.
- The driver and front passenger seat belt buckles are equipped with sensors that detect if the seat belts are fastened. The Advanced Air Bag System monitors the severity of a collision and seat belt usage then inflates the air bags as needed. Failure to properly wear seat belts can increase the risk or severity of injury in an accident.
- The front passenger seat is equipped with occupant classification sensors (weight sensors) that turn the front passenger air bag and front passenger knee air bag OFF under some conditions. These sensors are only used in this seat. Failure to be properly seated and wearing the seat belt can increase the risk or severity of injury in an accident. See "Front passenger air bag and status light" (P.136).
- Keep hands on the outside of the steering wheel. Placing them inside the steering wheel rim could increase the risk that they are injured if the front air bag inflates.

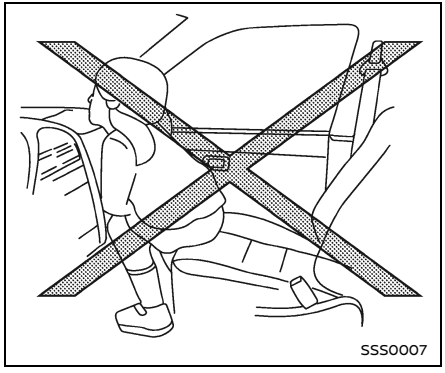
SSS0007

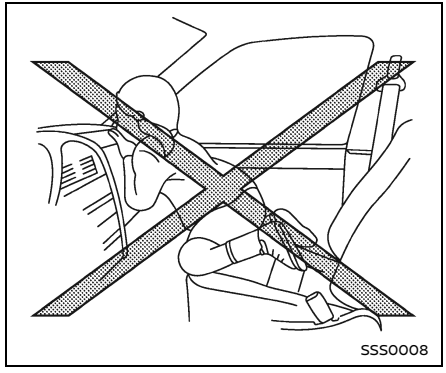
SSS0008

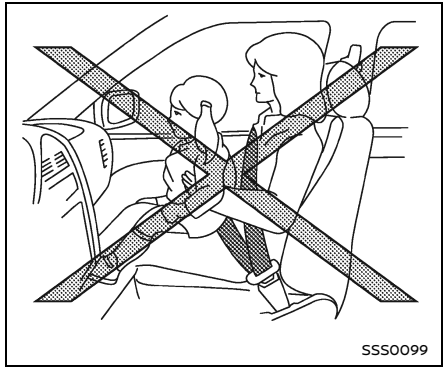
SSS0099

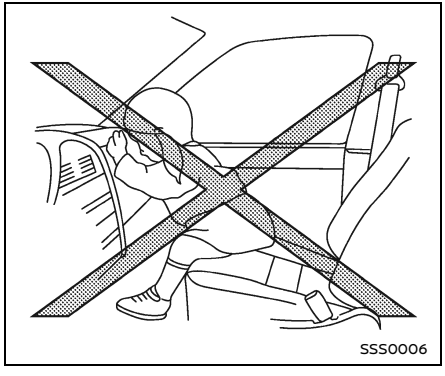
SSS0006

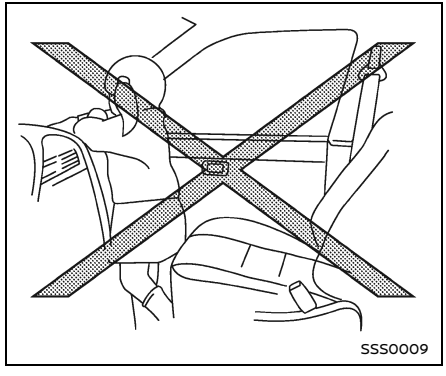
SSS0009

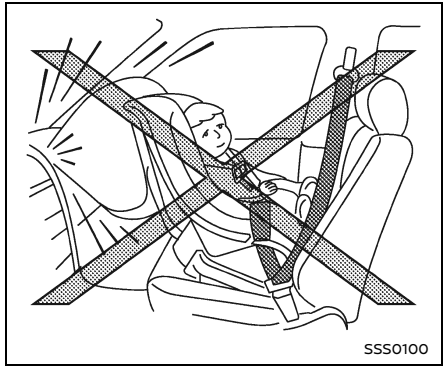
SSS0100

⚠ WARNING

- **Never let children ride unrestrained or extend their hands or face out of the window. Do not attempt to hold them in your lap or arms. Some examples of dangerous riding positions are shown in the illustrations.**
- **Children may be severely injured or killed when the front air bags, side air bags or curtain air bags inflate if they are not properly restrained. Pre-teens and children should be properly restrained in the rear seat, if possible.**
- **Even with the NISSAN Advanced Air Bag System, never install a rear-facing child restraint in the front seat. An inflating front air bag could seriously injure or kill your child. See "Child restraints" (P.106) for details.**

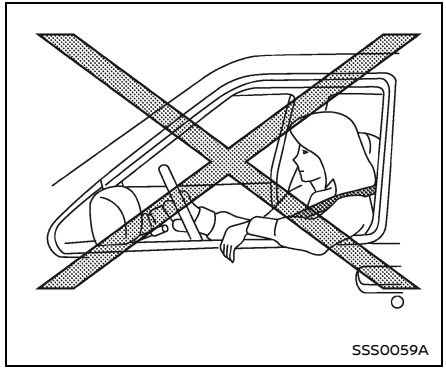

Do not lean against doors or windows.

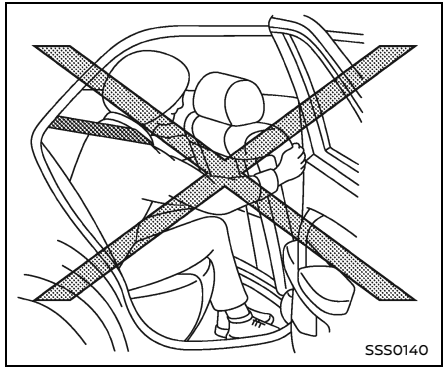

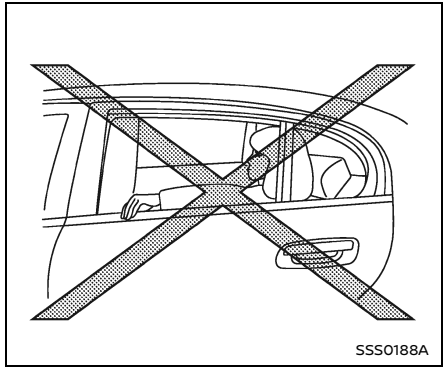

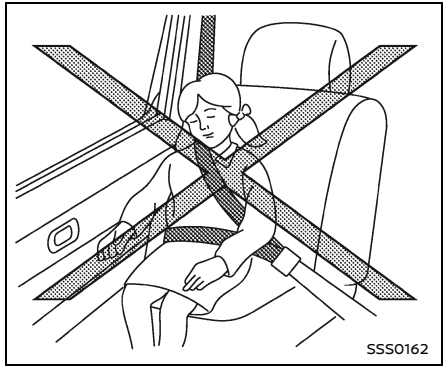

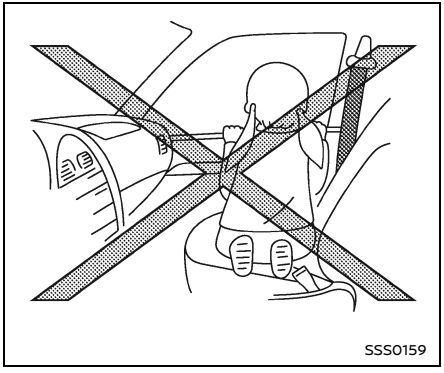

WARNING

Front, front central and rear outboard seat-mounted side-impact supplemental air bags and roof-mounted curtain side-impact and rollover supplemental air bags:

- **The side air bags ordinarily will not inflate in the event of a frontal impact, rear impact, rollover or lower severity side collision. Always wear your seat belts to help reduce the risk or severity of injury in various kinds of accidents.**
- **The curtain air bags ordinarily will not inflate in the event of a front impact, rear impact, or lower severity side collision. Always wear your seat belts to help reduce the risk or severity of injury in various kinds of accidents.**
- **The seat belts, the side air bags and curtain air bags are most effective when you are sitting well back and upright in the seat. The side air bags and curtain air bags inflate with great force. Do not allow anyone to place their hand, leg or face near the side air bags on the side of the seatback of the front and rear seat or near the side roof rails. Do not allow anyone sitting in the front seats or rear outboard seats to extend their hand out of the window or lean against the door. Some examples of dangerous riding positions are shown in the previous illustrations.**
- **When sitting in the rear seat, do not hold onto the seatback of the front seat. If the side air bags inflate, you may be seriously injured. Be especially careful with children, who should always be properly restrained. Some examples of dangerous riding positions are shown in the illustrations.**
- **Do not use seat covers on the front and rear seatbacks. They may interfere with side air bag inflation.**

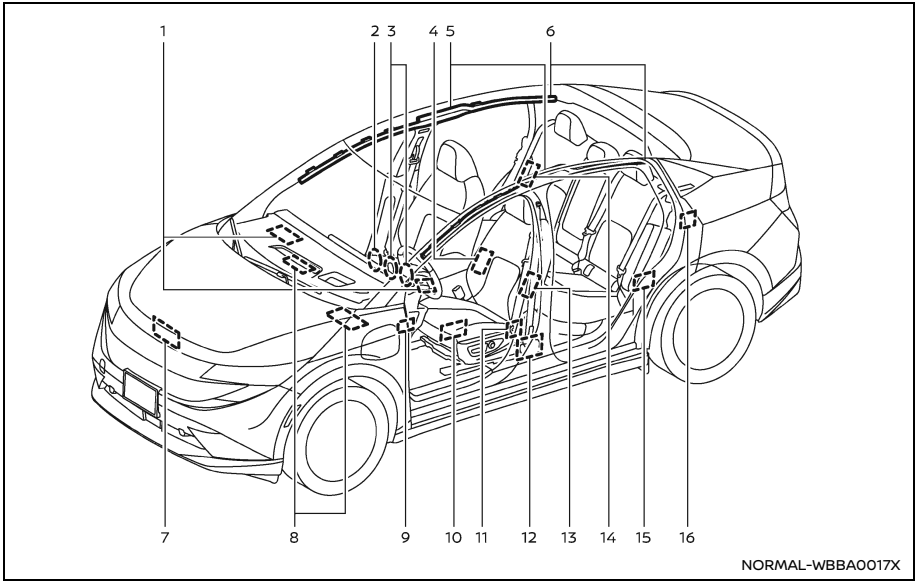

1. Supplemental front-impact air bag modules (NISSAN Advanced Air Bags)
2. Occupant classification system control unit
3. Occupant classification sensors (weight sensors)
4. Front central seat-mounted side-impact supplemental air bag (if so equipped)
5. Roof-mounted curtain side-impact and rollover supplemental air bag inflators
6. Roof-mounted curtain side-impact and rollover supplemental air bag modules
7. Crash zone sensor
8. Driver and front passenger supplemental knee air bags
9. Air bag Control Unit (ACU)
10. Front door pressure sensors (driver's side shown; front passenger side similar)
11. Lap outer pretensioners (front seats)
12. Seat belt with pretensioners (front seats)
13. Front seat-mounted side-impact supplemental air bag modules (driver’s side shown; front passenger side similar)
14. Rear outboard seat-mounted side-impact supplemental air bag modules (front passenger side shown; driver’s side similar)
15. Satellite sensors (driver's side shown; front passenger side similar)
16. Seat belt with pretensioners (driver’s side shown; front passenger side similar)

NISSAN ADVANCED AIR BAG SYSTEM (front seats)

Basic information

WARNING

To ensure proper operation of the passenger's Advanced Air Bag system, please observe the following items.

- **Do not allow a passenger in the rear seat to push or pull on the seatback pocket.**
- **Do not place heavy loads heavier than 9.1 lbs (4 kg) on the seatback, head restraint or in the seatback pocket.**
- **Make sure nothing is pressing against the rear of the seatback, such as a child restraint installed in the rear seat or an object stored on the floor.**
- **Make sure that there is no object placed under the front passenger seat.**
- **Make sure that there is no object placed between the seat cushion and center console or between the seat cushion and the door.**
- **Be sure that the front passenger seat does not contact the rear seat, instrument panel, etc., or the head restraint does not contact the roof.**
- **Do not position the front passenger seat so it contacts the rear seat. If the front seat does contact the rear seat, the air bag system may determine a sensor malfunction has occurred and the front passenger air bag status light may illuminate and the supplemental air bag warning light may flash.**
- **If a forward facing child restraint is installed in the front passenger seat, do not position the front passenger seat so the child restraint contacts the instrument panel. If the child restraint does contact the instrument panel, the system may determine the seat is occupied and the passenger air bag and front passenger knee air bag may deploy in a collision. Also the front passenger air bag status light may not illuminate. See "Child restraints" (P.106) for information about installing and using child restraints.**
- **Confirm the operating condition with the front passenger air bag status light.**
- **If you notice that the front passenger air bag status light is not operating as described in this section, it is recommended you visit a NISSAN certified LEAF dealer to check the passenger seat Advanced Air Bag System.**
- **Until you have confirmed with your dealer that your passenger seat Advanced Air Bag is working properly, position the occupants in the rear seating positions.**

This vehicle is equipped with the NISSAN Advanced Air Bag System for the driver and front passenger seats. This system is designed to meet certification requirements under U.S. regulations. It is also permitted in Canada. **All of the information, cautions and warnings in this manual apply and must be followed.**

The driver supplemental front-impact air bag is located in the center of the steering wheel. The passenger supplemental front-impact air bag is mounted in the instrument panel above the glove box. The front air bags are designed to inflate in higher severity frontal collisions,

although they may inflate if the forces in another type of collision are similar to those of a higher severity frontal impact. They may not inflate in certain frontal collisions. Vehicle damage (or lack of it) is not always an indication of proper front air bag operation.

The NISSAN Advanced Air Bag System has dual stage air bag inflators. The system monitors information from the Air bag Control Unit (ACU), seat belt buckle sensors and the occupant classification sensors (weight sensors). Inflator operation is based on the severity of a collision and seat belt usage for the driver. For the front passenger, the occupant classification sensors are also monitored. Based on information from the sensors, only one front air bag may inflate in a crash, depending on the crash severity and whether the front occupants are belted or unbelted. Additionally, the front passenger air bag and front passenger knee air bag may be automatically turned OFF under some conditions, depending on the information provided by the occupant classification sensors. If the front passenger air bag and front passenger knee air bag are OFF, the front passenger air bag status light will be illuminated. (See "Front passenger air bag and status light" (P.136) for further details.) One front air bag inflating does not indicate improper performance of the system.

If you have any questions about your air bag system, it is recommended you visit a NISSAN certified LEAF dealer to obtain information about the system. If you are considering modification of your vehicle due to a disability, you may also contact NISSAN. Contact information is contained in the front of this Owner's Manual.

When a front air bag inflates, a fairly loud noise may be heard, followed by release of smoke. This smoke is not harmful and does not indicate a fire. Care should be taken not to inhale it, as it may cause irritation and choking. Those with a history of a breathing condition should get fresh air promptly.

Front air bags, along with the use of seat belts, help to cushion the impact force on the head and chest of the front occupants. They can help save lives and reduce serious injuries. However, an inflating front air bag may cause facial abrasions or other injuries. Front air bags, other than the driver's and front passenger's knee air bags, do not provide restraint to the lower body.

Even with NISSAN Advanced Air Bags, seat belts should be correctly worn and the driver and passenger seated upright as far as practical away from the steering wheel or instrument panel. The front air bags inflate quickly in order to help protect the front occupants. Because of this, the force of the front air bag inflating can increase the risk of injury if the occupant is too close to, or is against, the air bag module during inflation.

The front air bags deflate quickly after a collision.

The front air bags operate only when the power switch is in the ON position.

After the power is placed in the ON position, the supplemental air bag warning light illuminates. The supplemental air bag warning light will turn off after about 7 seconds if the system is operational.

Front passenger air bag status light

Front passenger air bag and status light

WARNING

The front passenger air bag and front passenger knee air bag are designed to automatically turn OFF under some conditions. Read this section carefully to learn how it operates. Proper use of the seat, seat belt and child restraints is necessary for most effective protection. Failure to follow all instructions in this manual concerning the use of seats, seat belts and child restraints can increase the risk or severity of injury in an accident.

Status light:

The front passenger seat is equipped with occupant classification sensors (weight sensors) that turn the front passenger air bag and front passenger knee air bag on or off depending on the weight applied to the front passenger seat. The status of the front passenger air bag and front passenger knee air bag (ON or OFF) is indicated by the front passenger air bag status light which is located on the roof console. After the power switch is placed in the ON position, the front passenger air bag status light illuminates for about 7 seconds and then turns off or remains illuminated depending on the front passenger seat occupied status. The light operates as follows:

CONDITION [DESCRIPTION]	PASSENGER AIR BAG INDICATOR LIGHT ( )	FRONT PASSENGER AIR BAG AND FRONT PASSENGER KNEE AIR BAG STATUS
Empty [Empty front passenger seat]	ON (illuminated)	INHIBITED
Nobody/Somebody [Bag or Child or Child Restraint or Small Adult in front passenger seat]	ON (illuminated)/OFF (dark)	INHIBITED/ACTIVATED
Adult [Adult in the front passenger seat]	OFF (dark)	ACTIVATED

In addition to the above, certain objects placed on the front passenger seat may also cause the light to operate as described above depending on their weight.

For additional information related to the normal operation and troubleshooting of this occupant classification sensor system, please refer to "Normal operation:" (P.138) and "Troubleshooting:" (P.139) .

Front passenger air bag:

The front passenger air bag is designed to automatically turn OFF when the vehicle is operated under some conditions as described below as permitted by U.S. regulations. If the front passenger air bag is OFF, it will not inflate in a crash. The driver air bag and other air bags in your vehicle are not part of this system.

The purpose of the regulation is to help reduce the risk of injury or death from an inflating air bag to certain front passenger seat occupants, such as children, by requiring the air bag to be automatically turned OFF. Certain sensors are used to meet the requirements.

The occupant classification sensor in this vehicle is a weight sensor. It is designed to detect an occupant and objects on the seat by weight. For example,

- If a child in a child restraint is in the front passenger seat, the Advanced Air Bag System is designed to turn the passenger air bag OFF.
- If a child in a child restraint of a larger size and weight is in the front passenger seat, the Advanced Air Bag System may turn the passenger air bag ON.

Front passenger seat adult occupants who are properly seated and using the seat belt as outlined in this manual should not cause the passenger air bag and front passenger knee air bag to be automatically turned OFF. For small adults it may be turned OFF, however, if the occupant takes his/her weight off the seat cushion (for example, by not sitting upright, by sitting on an edge of the seat, or by otherwise being out of position), this could cause the sensors to turn the air bag OFF. Always be sure to be seated and wearing the seat belt properly for the most effective protection by the seat belt and supplemental air bag.

NISSAN recommends that pre-teens and children be properly restrained in a rear seat. NISSAN also recommends that appropriate child restraints and booster seats be properly installed in a rear seat. If this is not possible, the occupant classification sensors are designed to operate as described above to turn the front passenger air bag and front passenger knee air bag OFF, or ON for a child in a child restraint of a larger size and weight. Failing to properly secure child restraints and

to use the Automatic Locking Retractor (ALR) mode (child restraint mode) may allow the restraint to tip or move. In an accident, this can also result in the passenger air bag and front passenger knee air bag inflating in a crash instead of being OFF. (See "Child restraints" (P.106) for proper use and installation.)

If the front passenger seat is not occupied, the passenger air bag and front passenger knee air bag are designed not to inflate in a crash. However, heavy objects placed on the seat could result in air bag inflation, because of the object's weight detected by the occupant classification sensors. Other conditions could also result in air bag inflation, such as if a child is standing on the seat, or if two children are on the seat, contrary to the instructions in this manual. Always be sure that you and all vehicle occupants are seated and restrained properly.

Using the front passenger air bag status light, you can monitor when the front passenger air bag and front passenger knee air bag are automatically turned OFF.

If an adult occupant is in the seat but the front passenger air bag status light is illuminated (indicating that the front passenger air bag and front passenger knee air bag are OFF), it could be that the person is a small adult, or is not sitting on the seat properly.

If a child restraint must be used in the front seat, the front passenger air bag status light may or may not be illuminated, depending on the size of the child and the type of child restraint being used. If the front passenger air bag status light is not illuminated (indicating that the air bag might inflate in a crash), it could be that the child restraint or seat belt is not being used properly. Make sure that the child restraint is installed properly, the seat belt is used properly and the occupant is positioned properly. If the front passenger air bag status light is not illuminated, reposition the occupant or child restraint in a rear seat.

If the front passenger air bag status light will not illuminate even though you believe that the child restraint, the seat belts and the occupant are properly positioned, it is recommended that you take your vehicle to a NISSAN certified LEAF dealer. A NISSAN certified LEAF dealer can check the system status by using a special tool. However, until you have confirmed with your dealer that your air bag is working properly, reposition the occupant or child restraint in a rear seat.

The NISSAN Advanced Air Bag System and front passenger air bag status light will take a few seconds to register a change in the passenger seat status. This is normal system operation and does not indicate a malfunction.

If a malfunction occurs in the front passenger air bag system, the supplemental air bag warning light , located in the meters and gauges area, will illuminated (blinking or steadily lit). Have the system checked. It is recommended you visit a NISSAN certified LEAF dealer for this service.

Normal operation:

In order for the occupant classification sensor system to classify the front passenger based on weight, please follow the precautions and steps outlined below:

Precautions:

- Make sure that there are no objects weighing over 9.1 lbs (4 kg) hanging on the seat or placed in the seatback pocket.
- Make sure that a child restraint or other object is not pressing against the rear of the seatback.
- Make sure that a rear passenger is not pushing or pulling on the back of the front passenger seat.

- Make sure that the front passenger seat or seatback is not forced back against an object on the seat or floor behind it.
- Make sure that there is no object placed under the front passenger seat.
- Make sure that the front passenger seat head restraint does not contact the roof when adjusting the front passenger seat.

Steps:

1. Adjust the seat as outlined. (See "Front seats" (P.86).) Sit upright, leaning against the seatback, and centered on the seat cushion with your feet comfortably extended to the floor.
2. Make sure there are no objects on your lap.
3. Fasten the seat belt as outlined. (See "Seat belts" (P.96).) Front passenger seat belt buckle status is monitored by the occupant classification system, and is used as an input to determine occupancy status. So, it is highly recommended that the front passenger fasten their seat belt.
4. Remain in this position for 30 seconds allowing the system to classify the front passenger before the vehicle is put into motion.
5. Ensure proper classification by checking the front passenger air bag status light.

NOTE:
This vehicle's occupant classification sensor system generally keeps the classification locked during driving, so it is important that you confirm that the front passenger is properly classified prior to driving. However, the occupant classification sensor system may recalculate the weight of the occupant under some conditions (both while driving and when stopped), so the front passenger seat occupant should continue to remain seated as outlined above.

Troubleshooting:

If you think the front passenger air bag status light is incorrect:

1. If the light is ON with an adult occupying the front passenger seat:
   - Occupant is a small adult — the front passenger air bag status light is functioning as intended. The front passenger air bag and front passenger knee air bag are suppressed.

   However, if the occupant is not a small adult, then this may be due to the following conditions that may be interfering with the weight sensors:
   - Occupant is not sitting upright, leaning against the seatback, and centered on the seat cushion with his/her feet comfortably extended to the floor.
   - A child restraint or other object pressing against the rear of the seatback.
   - A rear passenger pushing or pulling on the back of the front passenger seat.
   - Forcing the front seat or seatback against an object on the seat or floor behind it.
   - An object placed under the front passenger seat.
   - An object placed between the seat cushion and center console or between the seat cushion and the door.

   If the vehicle is moving, please come to a stop when it is safe to do so. Check and correct any of the above conditions. Restart the vehicle and wait 1 minute.

NOTE:
A system check will be performed during which the front passenger air bag status light will remain lit for about 7 seconds initially.

If the light is still ON after this, the person should be advised not to ride in the front passenger seat and the

vehicle should be checked as soon as possible. It is recommended you visit a NISSAN certified LEAF dealer for this service.

2. If the light is OFF with a small adult, child or child restraint occupying the front passenger seat.

   This may be due to the following conditions that may be interfering with the weight sensors:

   - Small adult or child is not sitting upright, leaning against the seatback, and centered on the seat cushion with his/her feet comfortably extended to the floor.
   - The child restraint is not properly installed, as outlined. (See "Child restraints" (P.106).)
   - An object weighing over 9.1 lbs (4 kg) hanging on the seat or placed in the seatback pocket.
   - A child restraint or other object pressing against the rear of the seatback.
   - A rear passenger pushing or pulling on the back of the front passenger seat.
   - Forcing the front seat or seatback against an object on the seat or floor behind it.
   - An object placed under the front passenger seat.
   - An object placed between the seat cushion and center console.
   - The front passenger seat head restraint contacting the roof.

   If the vehicle is moving, please come to a stop when it is safe to do so. Check and correct any of the above conditions. Restart the vehicle and wait 1 minute.

NOTE:

A system check will be performed during which the front passenger air bag status light will remain lit for about 7 seconds initially.

If the light is still OFF after this, the small adult, child or child restraint should be repositioned in the rear seat and it is recommended that the vehicle should be checked by a NISSAN certified LEAF dealer as soon as possible.

3. If the light is OFF with no front passenger and no objects on the front passenger seat, the vehicle should be checked as soon as possible. It is recommended you visit a NISSAN certified LEAF dealer for this service.

Other supplemental front-impact air bag precautions

WARNING

- **Do not place any objects on the steering wheel pad or on the instrument panel. Also, do not place any objects between any occupant and the steering wheel or instrument panel. Such objects may become dangerous projectiles and cause injury if the front air bags inflate.**
- **Do not place objects with sharp edges on the seat. Also, do not place heavy objects on the seat that will leave permanent impressions in the seat. Such objects can damage the seat or occupant classification sensors (weight sensors). This can affect the operation of the air bag system and result in serious personal injury.**
- **Do not use water or acidic cleaners (hot steam cleaners) on the seat. This can damage the seat or occupant classification sensors. This can also affect the operation of the air bag system and result in serious personal injury.**

- **Immediately after inflation, several front air bag system components will be hot. Do not touch them; you may severely burn yourself.**
- **No unauthorized changes should be made to any components or wiring of the supplemental air bag system. This is to prevent accidental inflation of the supplemental air bag or damage to the supplemental air bag system.**
- **Do not make unauthorized changes to your vehicle's electrical system, suspension system or front end structure. This could affect proper operation of the front air bag system.**
- **Tampering with the front air bag system may result in serious personal injury. Tampering includes changes to the steering wheel and the instrument panel assembly by placing material over the steering wheel pad and above the instrument panel or by installing additional trim material around the air bag system.**
- **Removing or modifying the front passenger seat may affect the function of the air bag system and result in serious personal injury.**
- **Modifying or tampering with the front passenger seat may result in serious personal injury. For example, do not change the front seats by placing material on the seat cushion or by installing additional trim material, such as seat covers, on the seat that is not specifically designed to assure proper air bag operation. Additionally, do not stow any objects under the front passenger seat or the seat cushion and seatback. Such objects may interfere with the proper operation of the occupant classification sensors.**
- **No unauthorized changes should be made to any components or wiring of the seat belt system. This may affect the front air bag system. Tampering with the seat belt system may result in serious personal injury.**
- **It is recommended you visit a NISSAN certified LEAF dealer for work on and around the front air bag. It is also recommended you visit a NISSAN certified LEAF dealer for installation of electrical equipment. The Supplemental Restraint System (SRS) wiring harnesses* should not be modified or disconnected. Unauthorized electrical test equipment and probing devices should not be used on the air bag system.**
- **A cracked windshield should be replaced immediately by a qualified repair facility. A cracked windshield could affect the function of the supplemental air bag system.**

***The SRS wiring harness connectors are yellow and orange for easy identification.**

When selling your vehicle, we request that you inform the buyer about the front air bag system and guide the buyer to the appropriate sections in this Owner's Manual.

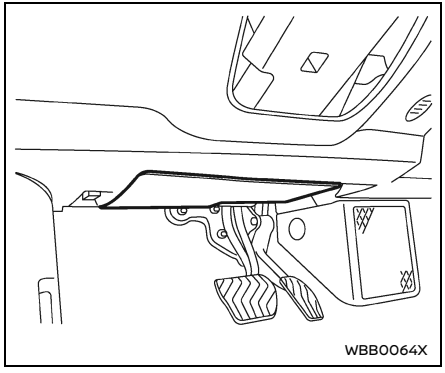

Driver's side

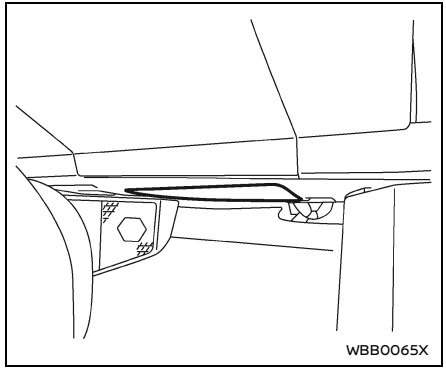

Front passenger's side

DRIVER AND FRONT PASSENGER SUPPLEMENTAL KNEE AIR BAG

The knee air bag is located in the knee bolster, on the driver's and front passenger's sides. **All of the information, cautions and warnings in this manual apply and must be followed.** The knee air bag is designed to inflate in higher severity frontal collisions, although it may inflate if the forces in another type of collision are similar to those of a higher severity frontal impact. It may not inflate in certain collisions.

Vehicle damage (or lack of it) is not always an indication of proper knee air bag operation.

When the knee air bag inflates, a fairly loud noise may be heard, followed by release of smoke. This smoke is not harmful and does not indicate a fire. Care should be taken not to inhale it, as it may cause irritation and choking. Those with a history of a breathing condition should get fresh air promptly.

The knee air bag helps to cushion the impact force on the knees of the driver and front passenger. It can help reduce serious injuries. However, an inflating knee air bag may cause abrasions or other injuries. The knee air bag provides restraint to the lower body.

The knee air bag inflates quickly in order to help protect the occupants. Because of this, the force of the knee air bag inflating can increase the risk of injury if the occupant is too close to, or is against, this air bag module during inflation. The knee air bag will deflate quickly after the collision is over OR the knee air bag will remain inflated for a short time.

The knee air bag operates only when the power switch is placed in the ON position.

After placing the power switch in the ON position, the supplemental air bag warning light illuminates. The supplemental air bag warning light will turn off after about 7 seconds if the system is operational.

WARNING

- **Do not place any objects between the knee bolster and the driver's or front passenger's seat. Such objects may become dangerous projectiles and cause injury if a knee air bag inflates.**

- **Right after inflation, the knee air bag system components will be hot. Do not touch them; you may severely burn yourself.**
- **No unauthorized changes should be made to any components or wiring of the knee air bag system. This is to prevent damage to or accidental inflation of the knee air bag system.**
- **Do not make unauthorized changes to your vehicle's electrical system or suspension system. This could affect proper operation of the knee air bag system.**
- **Tampering with the knee air bag system may result in serious personal injury. For example, do not change the driver or front passenger knee bolster or install additional trim material around the knee air bag.**
- **It is recommended that you visit a NISSAN certified LEAF dealer for work on and around the knee air bag. It is also recommended that you visit a NISSAN certified LEAF dealer for installation of electrical equipment. The SRS wiring harnesses* should not be modified or disconnected. Unauthorized electrical test equipment and probing devices should not be used on the knee air bag system.**

***The SRS wiring harness or connectors are yellow or orange for easy identification.**

When selling your vehicle, we request that you inform the buyer about the knee air bag system and guide the buyer to the appropriate sections in this manual.

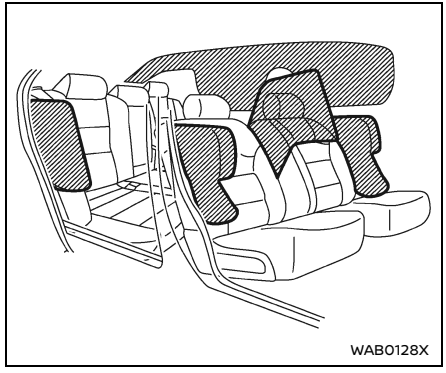

FRONT, FRONT CENTRAL*, REAR OUTBOARD SEAT-MOUNTED SIDE-IMPACT SUPPLEMENTAL AIR BAG AND ROOF-MOUNTED CURTAIN SIDE-IMPACT AND ROLLOVER SUPPLEMENTAL AIR BAG SYSTEMS

*: if so equipped

The side air bags are located in the outside of the seatback of the front and rear seats. The front central side air bag (if so equipped) is located in the inside of the seatback of the driver's seat. The curtain air bags are located in the side roof rails. **All of the information, cautions and warnings in this manual apply and must be followed.** The side air bags and cur-

tain air bags are designed to inflate in higher severity side collisions, although they may inflate if the forces in another type of collision are similar to those of a higher severity side impact. They are designed to inflate on the side where the vehicle is impacted. They may not inflate in certain side collisions.

Curtain air bags are also designed to inflate in certain types of rollover collisions or near rollovers. As a result, certain vehicle movements (for example, during severe off-roading) may cause the curtain air bags to inflate.

Vehicle damage (or lack of it) is not always an indication of proper side air bag and curtain air bag operation.

When the side air bags and curtain air bags inflate, a fairly loud noise may be heard, followed by release of smoke. This smoke is not harmful and does not indicate a fire. Care should be taken not to inhale it, as it may cause irritation and choking. Those with a history of a breathing condition should get fresh air promptly.

Side air bags, along with the use of seat belts, help to cushion the impact force on the chest and pelvic area of the front and rear outboard occupants. Front central side air bag, along with the use of seat belts, helps to cushion the impact force on the head area of the front occupants. Curtain air bags help to cushion the impact force to the head area of occupants in the front and rear outboard seating positions. They can help save lives and reduce serious injuries. However, an inflating side air bag or curtain air bag may cause abrasions or other injuries. Side air bags and curtain air bags do not provide restraint to the lower body.

The seat belts should be correctly worn and the driver, front passenger and rear outboard occupants seated upright as far as practical away from the side air bags. Rear seat passengers should be seated as far away as practical from the door finishers and side roof rails. The side air bags and curtain air bags inflate quickly in order to help protect the occupants. Because of this, the force of the side air bags and curtain air bags inflating can increase the risk of injury if the occupant is too close to, or is against, these air bag modules during inflation. The side air bags will deflate quickly after the collision is over. The front central side air bag and curtain air bags will remain inflated for a short time.

The side air bags and curtain air bags operate only when the power switch is in the ON position.

After placing the power switch in the ON position, the supplemental air bag warning light illuminates. The supplemental air bag warning light will turn off after about 7 seconds if the systems are operational.

WARNING

- **Do not place any objects near the seatback of the front and rear seats. Also, do not place any objects (an umbrella, bag, etc.) between the front and rear door finisher, the center console, and the front and rear seats. Such objects may become dangerous projectiles and cause injury if a side air bag inflates.**
- **Right after inflation, several side air bag and curtain air bag system components will be hot. Do not touch them; you may severely burn yourself.**
- **No unauthorized changes should be made to any components or wiring of the side air bag and curtain air bag systems. This is to prevent damage to or accidental inflation of the side air bag and curtain air bag systems.**

- **Do not make unauthorized changes to your vehicle's electrical system, suspension system or side panel. This could affect proper operation of the side air bag and curtain air bag systems.**
- **Tampering with the side air bag system may result in serious personal injury. For example, do not change the front and rear seats by placing material near the seatbacks or by installing additional trim material, such as seat covers, around the side air bag.**
- **Removing or modifying the front and rear passenger seat may affect the function of the air bag system and result in serious personal injury.**

- **It is recommended you visit a NISSAN certified LEAF dealer for work on and around the side air bag and curtain air bag. It is also recommended you visit a NISSAN certified LEAF dealer for installation of electrical equipment. The Supplemental Restraint System (SRS) wiring harnesses* should not be modified or disconnected. Unauthorized electrical test equipment and probing devices should not be used on the side air bag or curtain air bag systems.**

***The SRS wiring harness connectors are yellow and orange for easy identification.**

When selling your vehicle, we request that you inform the buyer about the side air bag and curtain air bag systems and guide the buyer to the appropriate sections in this Owner's Manual.

SEAT BELTS WITH PRETENSIONERS (front and rear outboard seats)

⚠ WARNING

- **The pretensioners cannot be reused after activation. They must be replaced together with the retractor and buckle as a unit.**
- **If the vehicle becomes involved in a collision but a pretensioner is not activated, be sure to have the pretensioner system checked and, if necessary, repaired. It is recommended you visit a NISSAN certified LEAF dealer for this service.**
- **No unauthorized changes should be made to any components or wiring of the pretensioner system. This is to prevent damage to or accidental activation of the pretensioners. Tampering with the pretensioner system may result in serious personal injury.**

- **It is recommended you visit a NISSAN certified LEAF dealer for work on and around the pretensioner system. It is also recommended you visit a NISSAN certified LEAF dealer for installation of electrical equipment. Unauthorized electrical test equipment and probing devices should not be used on the pretensioner system.**
- **If you need to dispose of a pretensioner or scrap the vehicle, it is recommended you visit a NISSAN certified LEAF dealer for this service. Correct pretensioner disposal procedures are set forth in the appropriate NISSAN Service Manual. Incorrect disposal procedures could cause personal injury.**

The pretensioner system may activate with the supplemental air bag system in certain types of collisions.

Working with the seat belt retractor, it helps tighten the seat belt when the vehicle becomes involved in certain types of collisions, helping to restrain front and rear outboard seat occupants.

The pretensioner is encased with the seat belt retractor. These seat belts are used the same way as conventional seat belts.

When a pretensioner activates, smoke is released and a loud noise may be heard. The smoke is not harmful and does not indicate a fire. Care should be taken not to inhale it, as it may cause irritation and choking. Those with a history of a breathing condition should get fresh air promptly.

After pretensioner activation, load limiters allow the seat belt to release webbing (if necessary) to reduce forces against the chest.

The supplemental air bag warning light is used to indicate malfunctions in the pretensioner system. See "Supplemental air bag warning light" (P.147). If the operation of the supplemental air bag warning light indicates there is a malfunction, have the system checked. It is recommended you visit a NISSAN certified LEAF dealer for this service.

When selling your vehicle, we request that you inform the buyer about the pretensioner system and guide the buyer to the appropriate sections in this Owner's Manual.

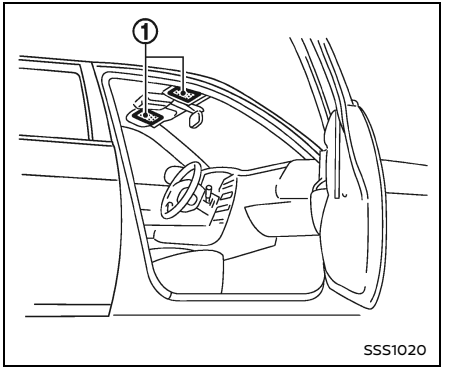

SUPPLEMENTAL AIR BAG WARNING LABELS

Warning labels about the supplemental front-impact air bag system are placed in the vehicle as shown in the illustration.

① **SRS air bag**

The warning labels are located on the surface of the sun visors.

WARNING

Do not use a rear-facing child restraint on a seat protected by an air bag in front of it. If the air bag deploys, it may cause serious injury or death.

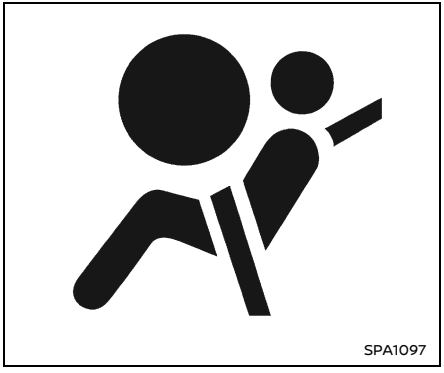

SUPPLEMENTAL AIR BAG WARNING LIGHT

The supplemental air bag warning light, displaying in the instrument panel, monitors the circuits for the air bag systems, pretensioners and all related wiring.

When the power switch is in the ON position, the supplemental air bag warning light illuminates for about 7 seconds and then turns off. This means the system is operational.

If any of the following conditions occur, the air bag and/or pretensioner systems need servicing:

- The supplemental air bag warning light remains on after approximately 7 seconds.
- The supplemental air bag warning light flashes intermittently.
- The supplemental air bag warning light does not come on at all.

Under these conditions, the air bag and/or pretensioner systems may not operate properly. They must be checked and repaired. It is recommended you visit a NISSAN certified LEAF dealer for this service.

WARNING

If the supplemental air bag warning light is on, it could mean that the front air bag, knee air bag, side air bag, curtain air bag and/or pretensioner systems will not operate in an accident.

To help avoid injury to yourself or others, have your vehicle checked as soon as possible. It is recommended you visit a NISSAN certified LEAF dealer for this service

REPAIR AND REPLACEMENT PROCEDURE

The front air bags, knee air bags, side air bags, curtain air bags and pretensioners are designed to activate on a one-time-only basis. As a reminder, unless it is damaged, the supplemental air bag warning light will remain illuminated after inflation has occurred. These systems should be repaired and/or replaced as soon as possible. It is recommended you visit a NISSAN certified LEAF dealer for this service.

When maintenance work is required on the vehicle, the front air bags, knee air bags, side air bags, curtain air bags and pretensioners and related parts should be pointed out to the person performing the maintenance. The power switch should always be in the OFF position when working under the hood or inside the vehicle.

WARNING

- **Once a front air bag, knee air bag, side air bag or curtain air bag has inflated, the air bag module will not function again and must be replaced. Additionally, the activated pretensioners must also be replaced. The air bag module and pretensioner should be replaced. It is recommended you visit a NISSAN certified LEAF dealer for this service. However, the air bag modules and pretensioner system cannot be repaired.**
- **The front air bag, knee air bag, side air bag and curtain air bag systems, and pretensioner system should be inspected if there is any damage to the front end or side portion of the vehicle. It is recommended you visit a NISSAN certified LEAF dealer for this service.**
- **If you need to dispose of a supplemental air bag or pretensioner or scrap the vehicle, it is recommended you visit a NISSAN certified LEAF dealer. Correct supplemental air bag and pretensioner system disposal procedures are set forth in the appropriate NISSAN Service Manual. Incorrect disposal procedures could cause personal injury.**
- **If there is an impact to your vehicle from any direction, your Occupant Classification Sensor (OCS) should be checked to verify it is still functioning correctly. It is recommended that you visit a NISSAN certified LEAF dealer for this service. The OCS should be checked even if no air bags deploy as a result of the impact. Failure to verify proper OCS function may result in an improper air bag deployment resulting in injury or death.**

2 Instruments and controls

Cockpit 151
Instrument panel 152
Meters and gauges 153
- Basic information 153
- Changing the meter screen view 154
- Speedometer and odometer 155
- Power meter 155
- Li-ion battery available charge gauge 156
- Estimated driving range 157
- Instrument brightness control 158
- Shift position indicator 158
- e-Step indicator 158

Warning lights, indicator lights and audible reminders 159
- Warning & Indicator Lights 159
- Checking lights 159
- Warning/indicator lights (red) 159
- Warning/indicator lights (yellow) 163
- Warning/indicator lights (other) 168
- Audible reminders 169

Vehicle information display 170
- Basic information 170
- How to use the vehicle information display 171
- Startup display 172
- Settings 172
- Vehicle information display warnings and indicators 179
- Trip computer 194
- State of charge display 202
- ECO Drive Report 202
- Clock and outside air temperature 203

Touch screen display 204
- Basic information 204
- Vehicle 204
- Charge and Climate Reminder display 206

Head Up Display (HUD) (if so equipped) 206
- Basic information 207
- How to use the HUD 208
- Driver Assistance/Navigation/Traffic Sign/Audio/Phone/Message for Driver Assistance linking 209
- Warning message (if so equipped) 209

Security systems 210
- Basic information 210
- Vehicle Security System 210
- NISSAN Vehicle Immobilizer System 211

Wiper and washer switch 212
- Basic information 212
- Windshield wiper and washer operation 213

Rain-sensing auto wiper system (if so equipped) ... 214
Rear window and outside mirror (if so equipped) defroster switch ... 215
Windshield deicer switch (if so equipped) ... 215
Headlight and turn signal switch ... 216
Headlight switch ... 216
Turn signal switch ... 222
Emblem light (if so equipped) ... 223
Horn ... 223
Heated steering wheel (if so equipped) ... 223
Operation with switch ... 223
Operation with touch screen display ... 224
Heated seats (if so equipped) ... 225
Basic information ... 225
Operation with touch screen display ... 226
Operation with switch (if so equipped) ... 227
AC ON switch (if so equipped) ... 228
Steering Assist switch ... 228
Rear Door Alert ... 228
Power outlets ... 229
Basic information ... 229
USB (Universal Serial Bus) charging connector (if so equipped) ... 230
Wireless charger (if so equipped) ... 231
Vehicle to Load (V2L) system (if so equipped) ... 233
Basic information ... 233
How to use the V2L system ... 235
Usable range of the V2L system ... 240
Troubleshooting ... 240
Emergency Call (SOS) button ... 241
Emergency support ... 241
Storage ... 243
Cup holders ... 243
Soft bottle holders ... 244
Adjustable luggage floor (if so equipped) ... 244
Glove box ... 246
Console box ... 246
Center storage ... 246
Sunglasses holder (if so equipped) ... 247
Card holder ... 248
Luggage hooks ... 248
Roof rack (if so equipped) ... 249
Windows ... 250
Power windows ... 250
Dimming Panoramic Roof with heat shielding (if so equipped) ... 254
Basic information ... 254
System operation ... 254
Interior lights ... 255
Basic information ... 255
Interior light switch ... 255
Map lights ... 255
Rear personal lights (if so equipped) ... 256
Rear room light (if so equipped) ... 256
Vanity mirror light (if so equipped) ... 256
Cargo light ... 256

COCKPIT

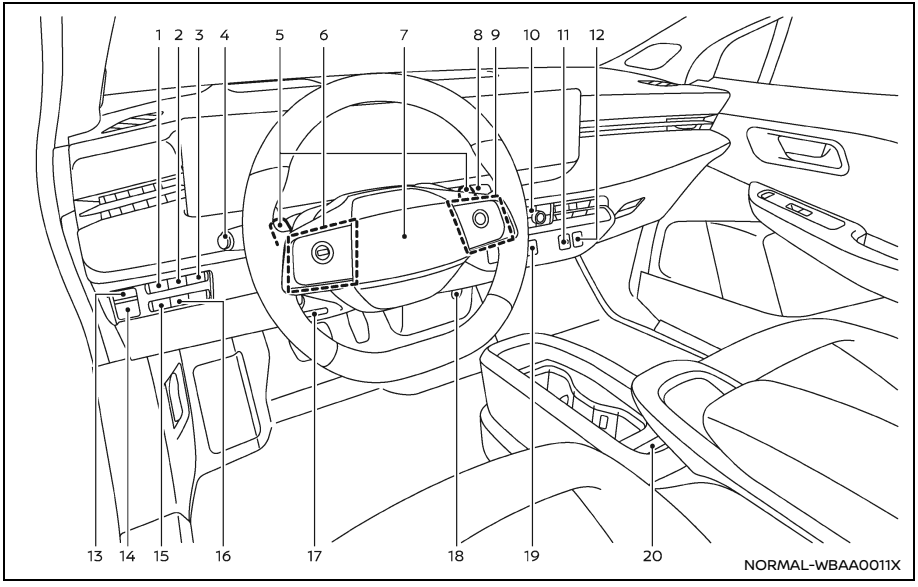

1. Heated steering wheel switch*
2. Head Up Display (HUD) switch*
3. AC ON switch*
4. Headlight and turn signal switch
5. Paddle selector (Manually selectable regenerative braking intensity)*
6. Steering-wheel-mounted controls (left side)
   - ProPILOT Assist switch
   - Volume control**
7. Steering wheel
   - Horn
8. Wiper and washer switch
9. Steering-wheel-mounted controls (right side)
   - Vehicle information display control
   - Touch screen display control**
   - Audio control**
   - Bluetooth® Hands-Free Phone System switches**
   - Voice recognition switch**
10. Hazard indicator flasher switch
11. Drive Mode Selector
12. e-Step switch
13. Automatic brake hold switch
14. Parking brake switch
15. Steering Assist switch
16. Power liftgate switch*
17. Tilt and telescopic steering lock lever
18. Power outlet
19. Shift buttons
20. USB (Universal Serial Bus) connection ports**

*: if so equipped

**: See the separate NissanConnect® Owner's Manual.

INSTRUMENT PANEL

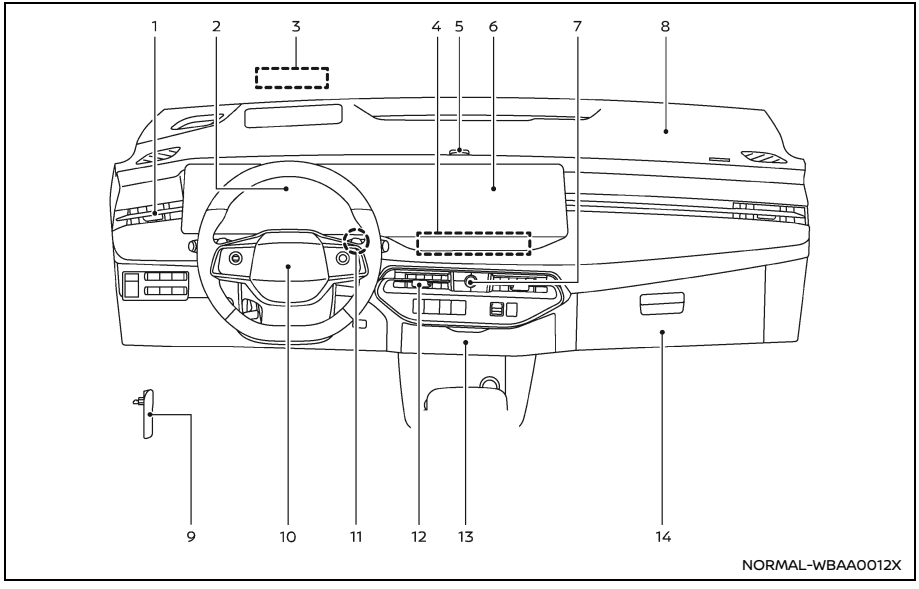

1. Side ventilator
2. Meters and gauges
   Vehicle information display
   Clock
3. Head Up Display (HUD)*
4. Heater and air conditioner control
   - Rear window and outside mirror* defroster switch
   - Windshield wiper deicer switch*
5. Charging status indicator light
6. Touch screen display
   - Audio system** or navigation system**
   - Intelligent Around View® Monitor
   - Bluetooth® Hands-Free Phone System**
   - Heater and air conditioner control display
   - Heated seat*
   - Heated steering wheel*
7. Audio switch**
8. Front passenger supplemental air bag
9. Hood release handle
10. Driver supplemental front-impact air bag
11. Push-button power switch
12. Center ventilator
13. Center storage
14. Glove box

*: if so equipped

**: See the separate NissanConnect® Owner's Manual.

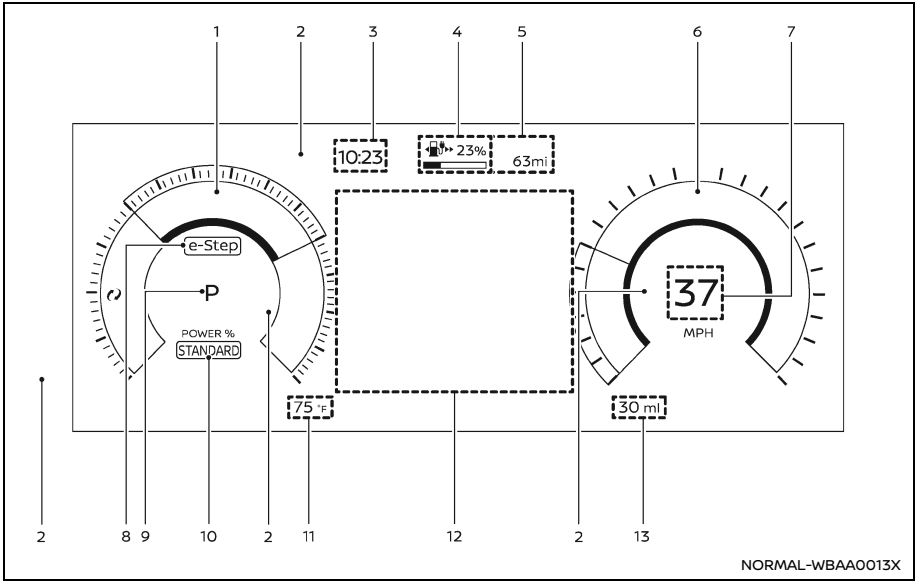

1. Power meter
2. Warning and indicator lights
3. Clock
4. Li-ion battery available charge gauge
5. Estimated driving range
6. Speedometer
7. Vehicle speed
8. e-Step indicator
9. Shift position indicator
10. Drive Mode Selector indicator
11. Outside air temperature
12. Vehicle information display
13. Odometer

BASIC INFORMATION

The view of the meter screen can be changed. (See "Changing the meter screen view" (P.154).)

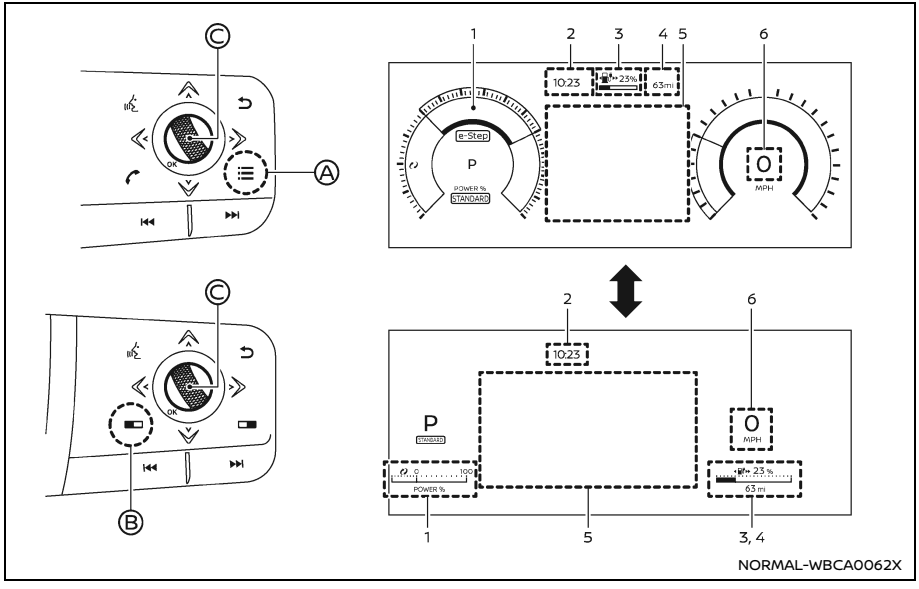

1. Power meter
2. Clock
3. Li-ion battery available charge gauge
4. Estimated driving range
5. Vehicle information display
6. Vehicle speed

CHANGING THE METER SCREEN VIEW

The meter screen view can be changed to expand the vehicle information display area.

To change the meter screen view:

1. Type A: Push the control switch Ⓐ on the right side of the steering wheel.

   "Shortcut Menu" appears on the vehicle information display area.

   Type B: Push the control switch Ⓑ on the right side of the steering wheel while the color of the button is in orange. "Shortcut Menu" appears on the vehicle information display area.
2. Select "Change Meter View" by rotating the scroll dial Ⓒ and push it to change the view.

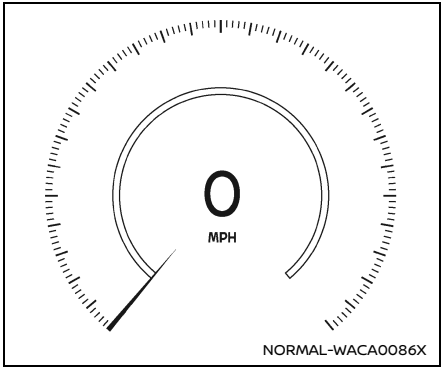

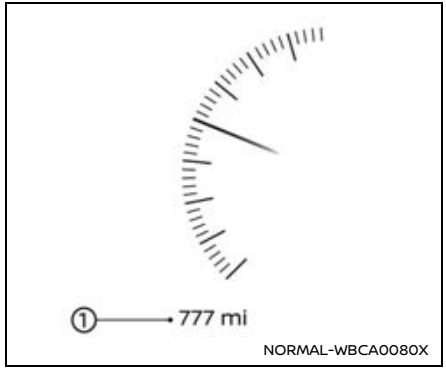

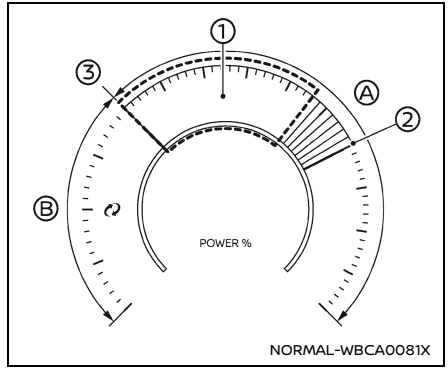

SPEEDOMETER AND ODOMETER

Speedometer

The speedometer indicates vehicle speed (MPH or km/h).

Odometer

The odometer ① is displayed in the vehicle information display:

- when the power switch is in the ON or READY to drive position
- for a period of time after the power switch was placed in the OFF position

The odometer displays the total distance the vehicle has been driven.

POWER METER

The power meter displays the traction motor power level when the accelerator pedal is depressed, as well as the level of power regeneration provided to the Li-ion battery by the regenerative brake.

This meter displays the actual traction motor power consumption Ⓐ and the regenerative brake power provided to the Li-ion battery Ⓑ. The white illuminated part ① in the display moves right or left depending on demand.

The power meter is in a neutral state ③.

The blue and white illuminated part moves to the right when power is provided to the traction motor (Li-ion battery

discharges).

The white illuminated part moves to the left when power is generated and provided to the Li-ion battery by the regenerative brake system (Li-ion battery charging).

The power meter also indicates if the power provided to the motor is limited. When power is limited, a guidance line of the limitation ② is displayed.

Regenerative braking is automatically reduced when the Li-ion battery is fully charged to prevent the Li-ion battery from becoming overcharged. Regenerative braking is also automatically reduced when the Li-ion battery temperature is high/low to prevent Li-ion battery damage.

If the Li-ion battery charge is low, power provided to the traction motor is reduced. Motor output is also limited if the Li-ion battery temperature is high/low.

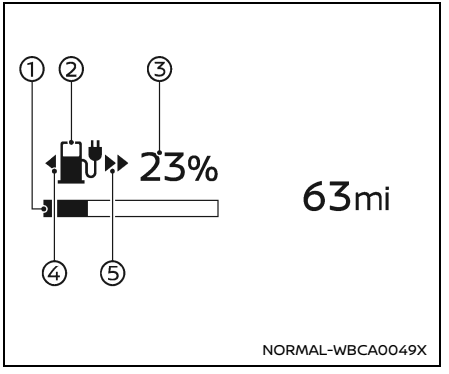

LI-ION BATTERY AVAILABLE CHARGE GAUGE

① The gauge indicates the approximate remaining Li-ion battery charge available to drive the vehicle.

② Low battery charge warning light illuminates in yellow when the available Li-ion battery charge is getting low.

③ This figure shows the current state of charge (%) of the Li-ion battery.

④ Indicates the location of the normal charge port lid.

⑤ Indicates the location of the DC Fast Charge port lid.

Charge the Li-ion battery before the percentage figure becomes "0".

When the low battery charge warning light illuminates in yellow, charge as soon as it is convenient, preferably before the percentage figure becomes "0". When the percentage figure becomes "0" and the low battery charge warning light (yellow) illuminates, there is a very small reserve of Li-ion battery charge remaining.

NOTE:

- **The length of the bar of the gauge is determined by the available charge and the amount of charge the Li-ion battery is capable of storing at the current temperature.**
- **Temperature affects the amount of charge the Li-ion battery is capable of storing. The Li-ion battery is capable of storing less power when the Li-ion battery temperature is cold. The Li-ion battery is capable of storing more power when the Li-ion battery is warm. The length of the bar of the gauge can change based on the amount of power the Li-ion battery is capable of storing. For example, when the Li-ion battery becomes colder, a longer bar is shown because the available charge is a greater percentage of the Li-ion**

battery's capability of storing power. When the Li-ion battery becomes warmer, a shorter bar is shown because the remaining energy is a lower percentage of the Li-ion battery's capability of storing power.

- **If the battery temperature is low, updates of the remaining battery level may be temporarily slower.**
- **If the outside temperature is low, the Li-ion battery charge gauge may fluctuate, but this is not a malfunction. This is because the maximum charging capacity changes when the battery temperature is too low. When the battery temperature warms up, the maximum charging capacity returns to normal.**

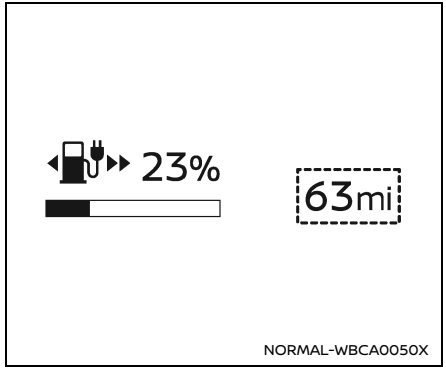

ESTIMATED DRIVING RANGE

The driving range (miles or km) provides an estimated distance that the vehicle can be driven before recharging is necessary. The driving range is constantly being calculated, based on the amount of available Li-ion battery charge and the actual power consumption average.

The displayed driving range is the distance calculated based on the current driving style.

NOTE:

- **If you continue to drive the vehicle after the low battery charge warning light (yellow) illuminates and the Li-ion battery is close to being completely discharged, "---" will be displayed. Charge the Li-ion battery as soon as possible. When the Li-ion battery is charged, the original display will be restored.**
- **After the Li-ion battery is charged, the displayed driving range is calculated based on the actual average energy consumption of previous journeys. The displayed driving range will vary every time the Li-ion battery is fully charged.**
- **The driving range will increase or decrease based on driving, air conditioning system on/off status and the battery heater (if so equipped) on/off status.**
- **The driving range displayed immediately after the vehicle delivery to the customer is calculated using a representative average electricity consumption rate. Over time, the driving range is calculated to suit the customer's personal driving style.**

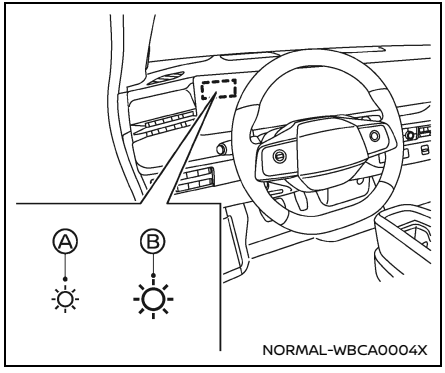

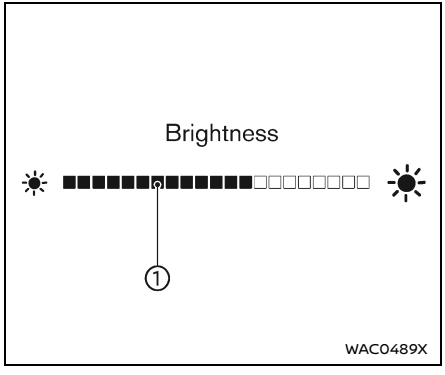

INSTRUMENT BRIGHTNESS CONTROL

The instrument brightness control switch can be operated when the power switch is in the ON position. When the switch is operated, the vehicle information display switches to the brightness adjustment mode.

Touch the switch Ⓐ to dim the instrument panel lights. The bar ① moves to the left side.

Touch the switch Ⓑ to brighten the lights. The bar ① moves to the right side.

The vehicle information display returns to the normal display when the instrument brightness control switch is not operated for more than 5 seconds.

SHIFT POSITION INDICATOR

The shift position indicator indicates the shift position when the power switch is in the ON or READY to drive position. (See "Shift position indicator" (P.182).)

e-Step INDICATOR

The e-Step indicator in the vehicle information display shows the status of the e-Step system. When the e-Step system is turned on, the indicator changes to blue and displays “e-Step”. When the e-Step system is turned off, the indicator changes to gray and displays “e-Step OFF”.

For additional information, see "e-Step system" (P.348).

WARNING LIGHTS, INDICATOR LIGHTS AND AUDIBLE REMINDERS

WARNING & INDICATOR LIGHTS

Warning/indicator lights (red)

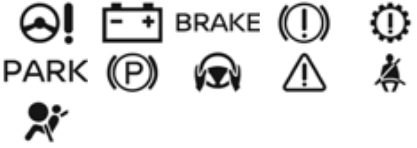

Warning/indicator lights (yellow)

Warning/indicator lights (other)

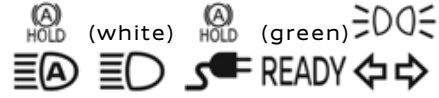

CHECKING LIGHTS

With all doors closed, apply the parking brake, fasten the seat belts and place the power switch in the ON position without starting the EV system. The following lights (if so equipped) will come on:

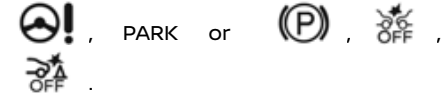

The following lights (if so equipped) come on briefly and then go off:

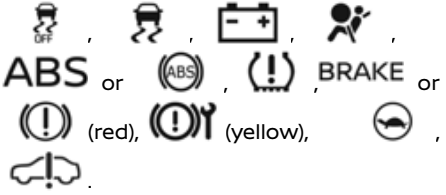

If any light does not come on or operates in a way other than described, it may indicate a burned-out bulb and/or a system malfunction. It is recommended you have the system checked by a NISSAN certified LEAF dealer.

WARNING/INDICATOR LIGHTS (red)

Basic information

See "Vehicle information display" (P.170).

12-volt battery charge warning light

The DC/DC converter converts 400 volt Li-ion battery voltage to charge the 12-volt battery.

When the power switch is in the ON position, the 12-volt battery charge warning light illuminates and then turns off.

When this warning light illuminates with the power switch in the READY to drive position, a chime sounds and the following warning lights also illuminate.

- Master warning light (red)
- EV system warning light

The following messages also appear on the vehicle information display.

If the vehicle is being driven: "Stop safely" and if the vehicle is stopped: "Apply parking brake". When these messages appear, immediately stop the vehicle in a safe location, apply the parking brake and push the P (Park) shift button. The warning and the chime stop when the parking brake is operated or the vehicle is in the P (Park) position. It is recommended that you contact a NISSAN certified LEAF dealer for support.

CAUTION

- **The DC/DC converter system may not be functioning properly if the 12-volt battery charge warning light illuminates continuously when the power switch is in the READY to drive position. Immediately stop the vehicle in a safe location and it is recommended that you contact a NISSAN certified LEAF dealer.**

- **If the 12-volt battery charge warning light illuminates continuously when the power switch is in the READY to drive position, do not charge the 12-volt battery. It may lead to a malfunction of the DC/DC converter system. It is recommended that you contact a NISSAN certified LEAF dealer.**

NOTE:

- **If the vehicle does not go into the READY to drive position (when the power switch is pushed and the brake pedal is depressed), jump-start the vehicle to place the power switch in the READY to drive position. See "Jump starting" (P.497).**
- **Do not jump-start the vehicle and it is recommended that you contact a NISSAN certified LEAF dealer for inspection:**
  - **If the 12-volt battery charge warning light turns off when the vehicle is in the READY to drive mode, the 12-volt battery may be discharged or there may be a malfunction in the 12-volt battery related system.**
  - **If the 12-volt battery charge warning light continues to illuminate when the vehicle is in the READY to drive mode, there may be a malfunction in the DC/DC converter. It is recommended that you contact a NISSAN certified LEAF dealer for inspection.**

Brake warning light (red)

BRAKE or

When the power switch is placed in the ON position or in the READY to drive position, the brake warning light remains illuminated for about a few seconds. If the brake warning light illuminates at any other time, it may indicate that the hydraulic brake system is not functioning properly. If the brake warning light illuminates, stop the vehicle immediately and it is recommended that you contact a NISSAN certified LEAF dealer.

A buzzer sounds if a malfunction occurs in the brake system power supply.

Low brake fluid warning light:

When the power switch is placed in the ON or READY to drive position, the brake warning light illuminates, and then turns off. If the light illuminates while the power switch is in the READY to drive position with the parking brake not applied, stop the vehicle and perform the following:

1. Check the brake fluid level. If brake fluid is necessary, add fluid and have the system checked. It is recommended you have this service performed by a NISSAN certified LEAF dealer. (See "Brake fluid" (P.519).)
2. If the brake fluid level is correct, have the warning system checked. It is recommended you have this service performed by a NISSAN certified LEAF dealer.

Anti-lock Braking System (ABS) warning indicator:

When the parking brake is released and the brake fluid level is sufficient, if both the brake warning light and the Anti-lock Braking System (ABS) warning light illuminate, it may indicate the ABS is not functioning properly. Have the brake system checked, and if necessary repaired. It is recommended you visit a NISSAN certified LEAF dealer for this service. (See "Anti-lock Braking System (ABS) warning light" (P.163).)

WARNING

- **Your brake system may not be working properly if the warning light is on. Driving could be dangerous. If you judge it to be safe, drive carefully to the nearest service station for repairs. Otherwise, have your vehicle towed because driving it could be dangerous.**
- **Pressing the brake pedal with the power switch position is other than ON or READY to drive position and/or low brake fluid level may increase your stopping distance and braking will require greater pedal effort as well as pedal travel.**
- **If the brake fluid level is below the minimum or MIN mark on the brake fluid reservoir, do not drive until the brake system has been checked. It is recommended you visit a NISSAN certified LEAF dealer for this service.**

Electric power steering warning light (red)

When the power switch is in the ON position, the electric power steering warning light illuminates. After starting the EV system, the electric power steering warning light turns off. This indicates the electric power steering is operational.

When the electric power steering warning light illuminates in red, the electric power steering does not operate. Stop the vehicle in a safe place immediately. Have the system checked. It is recommended that you visit a NISSAN certified LEAF dealer for this service.

(See "Electric power steering" (P.461).)

Electric shift control system warning light

The electric shift control system warning light illuminates when a malfunction occurs in the electric shift control system. When the master warning light illuminates, the chime sounds and the following message is displayed in the vehicle information display: "When parked apply parking brake & Turn off power switch".

When the power switch is placed in the OFF position, the chime sounds continuously. Ensure the parking brake is applied.

If the power switch cannot be placed in the OFF position, apply the parking brake and then place it in the OFF position.

Have the system checked. It is recommended that you visit a NISSAN certified LEAF dealer.

Electronic parking brake warning light

PARK or (P)

The electronic parking brake warning light indicates that the electronic parking brake system is operating.

When the power switch is placed in the ON position, the electronic parking brake warning light illuminates. When the EV system is started and the parking brake is released, the warning light turns off.

If the parking brake is not released, the electronic parking brake warning light remains on. Be sure that the electronic parking brake warning light has turned off before driving. (See "Parking brake" (P.351).)

If the electronic parking brake warning light illuminates or flashes while the brake system warning light illuminates, it

may indicate that the electronic parking brake system is not functioning properly. Have the electronic parking brake system checked, and if necessary repaired. It is recommended that you visit a NISSAN certified LEAF dealer promptly.

Hands OFF warning light

When the Steering Assist is activated, it monitors the driver's steering wheel operation. If the steering wheel is not operated or the driver takes his/her hands off the steering wheel for a period of time, the warning light illuminates. If the driver does not operate the steering wheel after the warning light has been illuminated, an audible alert sounds and the warning flashes in the vehicle information display, followed by a quick brake application to request the driver to take control of the vehicle again. If the driver remains unresponsive, the vehicle will automatically turn on the hazard lights and slow to a complete stop. (See "Steering Assist" (P.425).)

Master warning light

When the power switch is in the ON position, the master warning light illuminates if a warning message appears in the vehicle information display.

See "Vehicle information display" (P.170).

Seat belt warning light and chime

For driver and front passenger:

The light and chime remind you to fasten the driver and front passenger seat belts.

The light illuminates whenever the power switch is ON, and will remain illuminated until the front seat belts are fastened.

When the vehicle speed exceeds approximately 10 MPH (15 km/h), the light will blink unless the front seat belts are securely fastened.

When the power switch is ON, the chime will sound for approximately 6 seconds unless the driver's seat belt is securely fastened.

When the vehicle speed exceeds approximately 10 MPH (15 km/h), the chime will sound unless the front seat belts are securely fastened. The chime will continue to sound for approximately 95 seconds until the front seat belts are fastened.

For rear passengers:

The seat belt warning light for the rear passengers will illuminate whenever the power switch is ON, and will remain illuminated until the rear passenger's seat belts are fastened.

For approximately 65 seconds after the power switch is ON, the system does not activate the warning light for the rear passengers.

If a rear passenger seat belt is fastened then unfastened at a vehicle speed less than approximately 10 MPH (15 km/h), the warning light will illuminate. When the vehicle speed exceeds approximately 10 MPH (15 km/h), the warning light will blink and the chime will sound.

The warning will turn off when a rear passenger seat belt is fastened or automatically turn off approximately 65 seconds after the seat belt is unfastened.

See "Seat belts" (P.96) and "Rear seat belt warning" (P.180).

Supplemental air bag warning light

After placing the power switch in the ON position, the supplemental air bag warning light will illuminate. The supplemental air bag warning light will turn off after about 7 seconds if the supplemental front air bag and supplemental side air bag, curtain air bag systems and/or pretensioner seat belt are operational.

If any of the following conditions occur, the front air bag, side air bag, curtain air bag and pretensioner systems need servicing.

- The supplemental air bag warning light remains on after approximately 7 seconds.
- The supplemental air bag warning light flashes intermittently.
- The supplemental air bag warning light does not illuminate at all.

It is recommended you visit a NISSAN certified LEAF dealer for these services.

Unless checked and repaired, the Supplemental Restraint Systems and/or the pretensioners may not function properly.

For additional information, see "Supplemental Restraint System (SRS)" (P.127).

WARNING

If the supplemental air bag warning light is on, it could mean that the front air bag, side air bag, curtain air bag and/or pretensioner systems will not operate in an accident.

To help avoid injury to yourself or others, have your vehicle checked. It is recommended you visit a NISSAN certified LEAF dealer for this service.

WARNING/INDICATOR LIGHTS (yellow)

Basic information

See "Vehicle information display" (P.170).

Anti-lock Braking System (ABS) warning light

When the power switch is in the ON or READY to drive position, the Anti-lock Braking System (ABS) warning light illuminates and then turns off. This indicates the ABS is operational.

If the ABS warning light illuminates while the power switch is in the READY to drive position, or while driving, it may indicate the ABS is not functioning properly. Have the system checked. It is recommended you visit a NISSAN certified LEAF dealer for this service.

If an ABS malfunction occurs, the anti-lock function is turned off. The brake system then operates normally, but without anti-lock assistance. (See "Brake system" (P.462).)

Approaching Vehicle Sound for Pedestrians (VSP) OFF indicator light

If the VSP OFF indicator illuminates while the VSP system is ON, it will may indicate the VSP is not functioning properly. Have the VSP system checked. It is recommended that you visit a NISSAN certified LEAF dealer.

See "Approaching Vehicle Sound for Pedestrians (VSP) system" (P.35).

Automatic Emergency Braking (AEB) system OFF warning light

When the power switch is in the ON position, the Automatic Emergency Braking (AEB) system OFF warning light illumi-

nates. After starting the EV system, the warning light turns off.

This light illuminates when the Automatic Emergency Braking (AEB) with Pedestrian Detection system is set to OFF on the vehicle information display.

If the light illuminates or flashes when the Automatic Emergency Braking (AEB) with Pedestrian Detection system is ON, it may indicate that the system is unavailable. See "Automatic Emergency Braking (AEB) with Pedestrian Detection system" (P.429) or "Intelligent Forward Collision Warning (I-FCW)" (P.442).

Disabling the Vehicle Dynamic Control (VDC) system with the vehicle information display causes the Automatic Emergency Braking (AEB) with Pedestrian Detection system to become unavailable. This is not a malfunction.

Brake system warning light (yellow)

The brake system warning light functions for both the cooperative regenerative brake and the electronically driven intelligent brake systems. When the power switch is placed in the ON position or in the READY to drive position, the light remains illuminated for about a few seconds. If the light illuminates at any other time, it may indicate that the cooperative regenerative brake and/or the electronically driven intelligent brake systems are not functioning properly. Have the system checked. It is recommended that you visit a NISSAN certified LEAF dealer. If the brake warning light (red) also illuminates, stop the vehicle immediately and it is recommended that you contact a NISSAN certified LEAF dealer. For additional information, see "Brakes" (P.521).

WARNING

- **Depressing the brake pedal when the power switch position is not in the ON or READY to drive position and/or low brake fluid level may increase the stopping distance and braking will require greater pedal effort as well as pedal travel.**
- **If the brake fluid level is below the minimum or MIN mark on the brake fluid reservoir, do not drive until the brake system has been checked. It is recommended that you visit a NISSAN certified LEAF dealer.**
- **The cooperative regenerative brake system may not be working properly if the brake system warning light illuminates when the READY to drive indicator light is ON. If you judge it to be safe, drive carefully to the nearest service station for repairs. Otherwise, have your vehicle towed because driving could be dangerous.**

Electric power steering warning light (yellow)

When the electric power steering warning light illuminates in yellow, the power assist to the steering is lowered. At this time, greater steering efforts are required. Securely grip the steering wheel and operate it with greater force than usual.

Have the system checked. It is recommended that you visit a NISSAN certified LEAF dealer for this service.

See "Electric power steering" (P.461).

EV system warning light

When the power switch is in the ON position, the EV system warning light illuminates and then turns off.

This light illuminates if there is a malfunction in the following systems. It is recommended that you contact a NISSAN certified LEAF dealer.

- Traction motor and inverter system
- Charge port or on board charger
- Li-ion battery system
- Cooling system
- Emergency shut off system is activated. See "Emergency EV system shut off" (P.341).

Front passenger air bag status light

The front passenger air bag status light will be lit and the front passenger air bag and the front passenger knee air bag will be off depending on how the front passenger seat is being used.

For additional information, see "Front passenger air bag and status light" (P.136).

Low battery charge warning light

The low battery charge warning light illuminates when the available Li-ion battery charge is getting low. Charge as soon as it is possible, preferably before the Li-ion battery available charge gauge reaches the bottom line.

NOTE:
The low battery charge warning light turns off immediately before the Li-ion battery is completely discharged and the vehicle will stop. If the Li-ion battery becomes completely discharged, the vehicle must be charged in order to be driven.

Low tire pressure warning light

Your vehicle is equipped with a Tire Pressure Monitoring System (TPMS) that monitors the tire pressure of all tires.

The low tire pressure warning light warns of low tire pressure or indicates that the TPMS is not functioning properly.

After the power switch is placed in the ON position, this light illuminates for about 1 second and turns off.

Low tire pressure warning:

If the vehicle is being driven with low tire pressure, the warning light will illuminate. The “Tire Pressure Low - Add Air” warning also appears in the vehicle information display.

When the low tire pressure warning light illuminates, you should stop and adjust the tire pressure to the recommended COLD tire pressure shown on the Tire and Loading Information label. The low tire pressure warning light may not automatically turn off when the tire pressure is adjusted. After the tire is inflated to the recommended pressure, the vehicle must be driven at speeds above 16 MPH (25 km/h) to activate the TPMS and turn off the low tire pressure warning light. Use a tire pressure gauge to check the tire pressure.

The “Tire Pressure Low - Add Air” warning is active as long as the low tire pressure warning light remains illuminated.

For additional information, see "Vehicle information display" (P.170), "Tire Pressure Monitoring System (TPMS)" (P.333) and "Tire Pressure Monitoring System (TPMS)" (P.485).

TPMS malfunction:

If the TPMS is not functioning properly, the low tire pressure warning light will

flash for approximately 1 minute when the power switch is placed in the ON position. The light will remain on after the 1 minute. Have the system checked. It is recommended you visit a NISSAN certified LEAF dealer for this service. The “Tire Pressure Low - Add Air” warning does not appear if the low tire pressure warning light illuminates to indicate a TPMS malfunction.

For additional information, see "Tire Pressure Monitoring System (TPMS)" (P.333).

WARNING

- **Radio waves could adversely affect electric medical equipment. Those who use a pacemaker should contact the electric medical equipment manufacturer for the possible influences before use.**
- **If the light does not illuminate with the power switch placed in the ON position, have the vehicle checked. It is recommended you visit a NISSAN certified LEAF dealer for this service as soon as possible.**
- **If the light illuminates while driving, avoid sudden steering maneuvers or abrupt braking, reduce vehicle speed, pull off the road to a safe location and stop the vehicle as soon as possible. Driving with under-inflated tires may permanently damage the tires and increase the likelihood of tire failure. Serious vehicle damage could occur and may lead to an accident and could result in serious personal injury. Check the tire pressure for all four tires. Adjust the tire pressure to the recommended COLD tire pressure shown on the Tire and Loading Information label to turn the low tire pressure warning light OFF. If the light still illuminates while driving after adjusting the tire pressure, a tire may be flat or the TPMS may be malfunctioning. If you have a flat tire, repair it with an emergency tire puncture repair kit as soon as possible. If no tire is flat and all tires are properly inflated, it is recommended you consult a NISSAN certified LEAF dealer.**
- **Replacing tires with those not originally specified by NISSAN could affect the proper operation of the TPMS.**
- **To help avoid serious personal injury or death, when checking your tire pressure, either as part of routine maintenance or because of a TPMS alert, please check the pressure in all of your tires. Driving on underinflated tires can cause tire failure and interfere with the proper operation of other vehicle systems.**

CAUTION

- **The TPMS is not a substitute for the regular tire pressure check. Be sure to check the tire pressure regularly.**
- **If the vehicle is being driven at speeds of less than 16 MPH (25 km/h), the TPMS may not operate correctly.**
- **Be sure to install the specified size of tires to the four wheels correctly.**

Master warning light

When the power switch is in the ON position, the master warning light illuminates if a warning message appears in the vehicle information display.

See "Vehicle information display" (P.170).

Power limitation indicator light

When the power switch is in the ON position, the power limitation indicator light illuminates and then turns off.

When the power limitation indicator light is illuminated with the power switch in the READY to drive position, the power provided to the traction motor is reduced. Therefore the vehicle is not as responsive when the accelerator is depressed while the power limitation indicator light is illuminated.

When this light illuminates and any message appears on the vehicle information display, follow the instructions.

This light illuminates in the following conditions.

- Li-ion battery available charge is extremely low.
- Li-ion battery temperature is very low.
- When the temperature of EV system is high (motor, inverter, coolant system, Li-ion battery etc.).
- When the EV system has a malfunction.

If the low battery charge warning light is illuminated, charge the Li-ion battery as soon as possible.

If this light illuminates because the Li-ion battery is cold due to low outside temperatures, move the vehicle to a warmer location. The Li-ion battery temperature may be increased by charging the Li-ion battery.

If the light illuminates when the EV system becomes hot due to continuous hill climbing either continue driving at a slower safe speed, or stop the vehicle in a safe location. If this light does not turn off, it is recommended that you contact a NISSAN certified LEAF dealer.

If the light illuminates in a situation other than those described above, or if it does not turn off, there may be a system malfunction. It is recommended that you contact a NISSAN certified LEAF dealer.

WARNING

Power limitation mode can result in reduced power and vehicle speed. The reduced speed may be lower than other traffic, which could increase the chance of a collision. Be especially careful when driving. If the vehicle cannot maintain a safe driving speed, pull to the side of the road in a safe area. Charge the Li-ion battery if the charge is low or allow the Li-ion battery to cool.

Rear Automatic Braking (RAB) system OFF warning light

This light comes on when the power switch is placed in the ON position. It turns off after the EV system is started.

This light illuminates when the RAB system is turned off in the vehicle information display.

If the light illuminates or flashes when the RAB system is on, it may indicate that the system is unavailable. For additional information, see "Rear Automatic Braking (RAB)" (P.453).

Slip indicator light

When the power switch is in the ON position, the slip indicator light illuminates and then turns off.

The light will blink when the Vehicle Dynamic Control (VDC) system or the traction control system is operating, thus alerting the driver that the vehicle is nearing its traction limits. The road surface may be slippery.

If the light illuminates while the VDC system is on, this light alerts the driver to the fact that the VDC system's fail-safe mode is operating, for example the VDC system may not be functioning properly. Have the system checked. It is recommended you visit a NISSAN certified LEAF dealer for this service. If a malfunction occurs in the system, the VDC system function will be canceled but the vehicle is still driveable. For additional information, see "Vehicle Dynamic Control (VDC) system" (P.466).

Vehicle Dynamic Control (VDC) off indicator light

The light comes on when the VDC is turned OFF. This indicates that the VDC system and traction control system are not operating.

Turn the VDC on using the vehicle information display, or restart the EV system and the system will operate normally. (See "Vehicle Dynamic Control (VDC) system" (P.466).)

The light also comes on when placing the power switch in the ON position. The light will turn off after about 2 seconds if the system is operational. If the light stays on or comes on along with the indicator light while you are driving, have the VDC system checked. It is recommended that you visit a NISSAN certified LEAF dealer for this service.

WARNING

The VDC should remain on unless freeing a vehicle from mud or snow.

While the VDC system is operating, you might feel a slight vibration or hear the system working when starting the vehicle or accelerating, but this is not a malfunction.

WARNING/INDICATOR LIGHTS (other)

Basic information

See "Vehicle information display" (P.170).

Automatic brake hold indicator light (white)

The automatic brake hold indicator light (white) illuminates when the automatic brake hold system is on standby. (See "Automatic brake hold" (P.354).)

Automatic brake hold indicator light (green)

The automatic brake hold indicator light (green) illuminates when the automatic brake hold system is operating. (See "Automatic brake hold" (P.354).)

Exterior light indicator

This indicator illuminates when the headlight switch is turned to the AUTO, or position and the front parking lights,

rear combination lights, license plate lights or headlights are on. The indicator turns off when these lights are turned off.

High beam assist indicator light

The high beam assist indicator light illuminates when the high beam assist system is turned on and it is operational. (See "High beam assist" (P.219).)

High beam indicator light

This light illuminates when the headlight high beam is on and goes out when the low beam is selected.

Plug in indicator light

This light illuminates while charge connector is connected to the vehicle and blinks during charging.

This indicator light will not illuminate if the vehicle is in the sleep mode.

NOTE:
If the charge connector is connected to the vehicle, the power switch cannot be placed in the READY to drive position.

READY to drive indicator light

The READY to drive indicator light illuminates when the EV (Electric Vehicle) system is powered and the vehicle may be driven.

The READY to drive indicator light will turn off in the following conditions.

- Certain EV (Electric Vehicle) system malfunctions.
- The READY to drive indicator light turns off immediately before the Li-ion battery is completely discharged. If the Li-ion battery becomes completely discharged, the vehicle must be charged in order to be driven. See "If the Li-ion battery becomes completely discharged" (P.500).

Turn signal/hazard indicator lights

The light flashes when the turn signal switch lever or hazard switch is turned on.

AUDIBLE REMINDERS

12-volt battery charge warning chime

If the 12-volt battery charge warning light illuminates, the chime will sound when a warning message is displayed on the vehicle information display.

When the chime sounds, immediately stop the vehicle in a safe location, shift to the P (Park) position and apply parking brake. The 12-volt battery charge warning light turns off and the chime will stop when the parking brake is applied or the vehicle is placed in the P (Park) position. It is recommended that you contact a NISSAN certified LEAF dealer for support.

Brake pad wear warning

The disc brake pads have audible wear warnings. When a brake pad requires replacement, it will make a high pitched scraping sound when the vehicle is in motion. This scraping sound will first occur only when the brake pedal is depressed. After more wear of the brake pad, the sound will always be heard even if the brake pedal is not depressed. Have the brakes checked as soon as possible if the warning sound is heard.

Electric shift control system reminder chime

If an improper shift operation is performed, for safety reasons a chime will sound and at the same time, depending on the conditions, the operation will be cancelled or the shift position will switch to the N (Neutral) position.

For more details, see "Driving the vehicle" (P.343).

Door lock warning chime

When the chime sounds, be sure to check both the vehicle and the Intelligent Key. See "Troubleshooting guide" (P.273).

Driving Aid chimes

An audible alert/chime may be heard if any of the following systems (if so equipped) are active:

- Blind Spot Warning (BSW)
- Intelligent Blind Spot Intervention (I-BSI)
- Rear Cross Traffic Alert (RCTA)
- ProPILOT Assist
- Automatic Emergency Braking (AEB) with Pedestrian Detection
- Intelligent Forward Collision Warning (I-FCW)
- Intelligent Driver Alertness (I-DA)
- Rear Automatic Braking (RAB)
- Sonar

Light reminder chime

The light reminder chime will sound when the headlight switch is placed in the ≡DC or position after the EV system was turned off, and the driver's door is opened with the light is on.

Turn the light switch to the OFF (if so equipped) or AUTO position when you leave the vehicle.

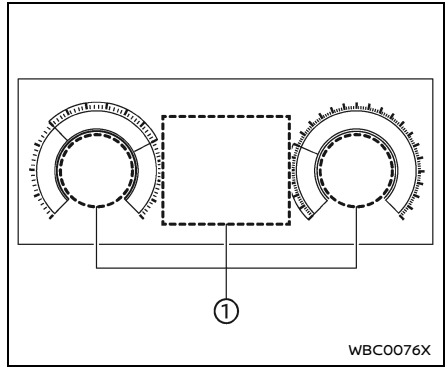

Example

BASIC INFORMATION

The vehicle information display ① is located as shown above, and it displays the warnings and information. The following items are also displayed if the vehicle is equipped with them:

- Vehicle settings
- Trip computer information
- Driver Assistance
- ProPILOT Assist
- Intelligent Key operation information
- Audio information
- Navigation - turn by turn

- Indicators and warnings
- Tire pressure information
- Other information

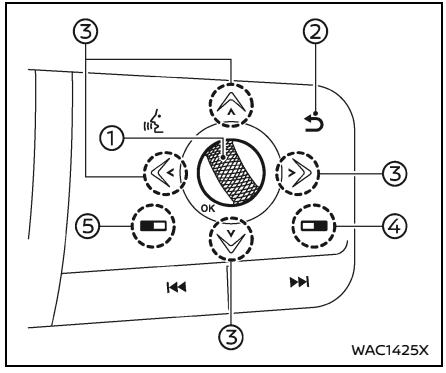

Type A

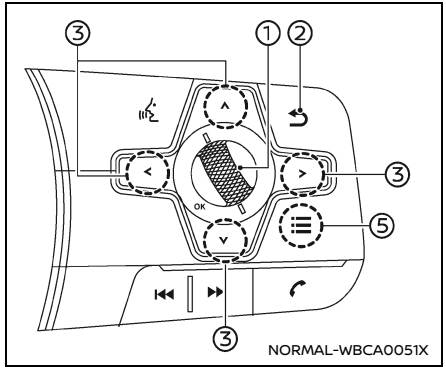

Type C

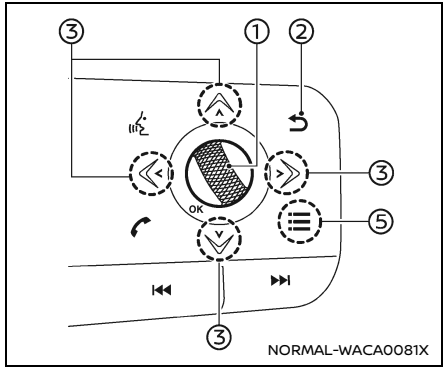

Type B

HOW TO USE THE VEHICLE INFORMATION DISPLAY

The vehicle information display can be changed using the dial and buttons located on the steering wheel.

① Scroll dial - navigate through the items and change or select an item in vehicle information display

this scroll dial allows up/down navigation and push to select

② ↩ - go back to the previous menu

③ Up/down/left/right arrows - change from one display screen category to the next (i.e. trip, Energy economy)

④ Push to operate the touch screen display by the steering-wheel-mounted controls. See "Touch screen display" (P.204) for additional information.

⑤ Type A: Push to operate the vehicle information display by the steering-wheel-mounted controls. Push twice to display the "Shortcut Menu" screen.

Type B and Type C: Display the "Shortcut Menu" screen.

Shortcut Menu

If you push the ⑤ button while the color of the button is in orange (Type A) or when the ☰ button ⑤ is pushed (Type B and Type C), the "Shortcut Menu" screen will appear on the vehicle information display. Select the menu by rotating the scroll dial ① and push it.

The following menus are available:

- Change Meter View

  Allows user to change the meter screen view. (See "Changing the meter screen view" (P.154).)

- Audio Source

  Allows user to select the available audio source. (See the separate NissanConnect® Owner's Manual for the audio system.)

- Driver Assistance

  Allows user to change the "Driver Assistance" settings. (See "Driver Assistance" (P.173).)

STARTUP DISPLAY

When the power switch is placed in the ON position, the vehicle information display may display the following screens if the vehicle is equipped with them:

- Home
- Blank
- Drive Computer
- Energy Economy
- ECO Pedal Guide
- Energy Economy History
- Tire Pressure
- Charge Information
- Battery Information
- Charge power information
- Navigation
- Compass
- Audio
- Driver Assistance
- ProPILOT Assist
- Speed Limit Sign
- Warnings
- Settings

Warnings will only display if there are any present. For more information on warnings and indicators, see "Vehicle information display warnings and indicators" (P.179).

To control what items display in the vehicle information display, see "Settings" (P.172).

SETTINGS

Basic information

The setting mode allows user to change the information displayed in the vehicle information display and some settings. The following items are available if the vehicle is equipped with them:

- VDC Setting
- Driver Assistance
- Head-Up Display
- ECO Mode Setting
- TPMS setting
- Vehicle Settings
- Clock
- EV Settings
- Maintenance
- Customize Display
- Unit/Language
- Factory Reset

VDC Setting

To change the setting, use the scroll dial to select and push it.

- System

  Allows user to turn the Vehicle Dynamic Control (VDC) system ON or OFF. By default the VDC system will be turned ON. If the VDC system is turned off, the VDC OFF indicator light will illuminate.

NOTE:
The vehicle should be driven with the Vehicle Dynamic Control (VDC) system ON for most driving conditions. (See "Vehicle Dynamic Control (VDC) system" (P.466).)

Driver Assistance

To change the status, warnings or turn on or off any of the systems/warnings displayed in the "Driver Assistance" menu, use the scroll dial to select and change a menu item. The following items are available if the vehicle is equipped with them:

- Intelligent Cruise
- Lane Centering Assist
- Lane Assist
- Blind Spot Assist
- Emergency Assist
- Traffic Sign Assist
- Parking Assist
- Driver Monitor
- Timer Alert
- Low Temp. Alert
- e-Step

Lane Centering Assist:

- Steering Assist

  Allows user to turn the function ON/OFF.

Lane Assist:

- Warning

  Allows user to turn the Lane Departure Warning (LDW) system ON/OFF.
- Intervention

  Allows user to turn the Intelligent Lane Intervention (I-LI) system ON/OFF.
- Lane Sensitivity

  Allows user to select an item from below.

  – Strong
  – Normal
  – Mild.
- Steering Vibration

  Allows user to select an item from below.

  – High
  – Medium
  – Low.

(See "Lane Departure Warning (LDW)" (P.372) and "Intelligent Lane Intervention (I-LI)" (P.377).)

Blind Spot Assist:

- Warning

  Allows user to turn the Blind Spot Warning (BSW) system ON/OFF.
- Intervention

  Allows user to turn the Intelligent Blind Spot Intervention (I-BSI) system ON/OFF.

(See "Blind Spot Warning (BSW)" (P.383) and "Intelligent Blind Spot Intervention (I-BSI)" (P.391).)

Emergency Assist:

- Emergency Braking

  Allows user to turn the function ON/OFF.
- Warning Timing

  Allows user to customize the warning display timing from below.

  – Later
  – Standard
  – Earlier

(See "Automatic Emergency Braking (AEB) with Pedestrian Detection system" (P.429), "Intelligent Forward Collision

Warning (I-FCW)" (P.442) and "Rear Automatic Braking (RAB)" (P.453).)

Traffic Sign Assist:

- Speed Limit Sign

  Allows user to turn the function ON/ OFF.
- Speed Limit Warning

  Allows user to turn the function ON/ OFF.

(See "Traffic Sign Recognition (TSR)" (P.368).)

Parking Assist:

- Rear Auto Braking

  Allows user to turn the function ON/ OFF.
- Rear Cross Traffic Alert

  Allows user to turn the function ON/ OFF.
- Moving Object

  Allows user to turn the Moving Object Detection (MOD) ON/OFF.
- Front Sonar (if so equipped)

  Allows user to turn the front sonar ON/ OFF.
- Rear Sonar

  Allows user to turn the rear sonar ON/ OFF.
- Sonar Distance

  Allows user to select an item from below.

  – Long

  – Medium

  – Short
- Auto Show Sonar

  Allows user to turn the sonar system display ON/OFF.
- Sonar Volume

  Allows user to select an item from below.

  – High

  – Medium

  – Low

(See "Moving Object Detection (MOD)" (P.313), "Rear Cross Traffic Alert (RCTA)" (P.402), "Rear Automatic Braking (RAB)" (P.453), "Front and rear sonar system (if so equipped)" (P.470), and "Rear Sonar System (RSS) (if so equipped)" (P.476).)

Driver Monitor:

- Driver Alertness

Allows user to turn the function ON/ OFF.

(See "Intelligent Driver Alertness (I-DA)" (P.450).)

Timer Alert:

Allows user to adjust the Timer Alert or reset.

- (Current Time)/(Set Time)
- Reset

Low Temp. Alert:

Allows user to turn the Low Temperature Alert function ON/OFF.

e-Step:

- Retain Mode

  Allows user to turn the retain mode function ON/OFF.

  In case of memory setting ON, maintain the e-Step system setting from the last time after the EV system restarts.

For more information, see "e-Step system" (P.348).

Head-Up Display (if so equipped)

To change the status or turn on or off any of the systems displayed in the “Head-Up Display” menu, use the scroll dial to select and change a menu item:

- Brightness
- Height
- Rotation
- Contents Selection

  – Navigation

  – Driving Assist

- Speed Limit Sign
- Audio
- Phone

- Reset

(See "Head Up Display (HUD) (if so equipped)" (P.206).)

ECO Mode Setting

This setting allows user to change the ECO mode system settings.

- ECO Drive Assist
  - ECO Indicator
  - ECO Drive Report
- View History
  - Reset

    Allows user to reset this item.
- Tire Pres ECO advice

  Allows user to turn the function ON/OFF. (See "Tire Pres ECO advice" (P.358).)

TPMS setting

Tire Pressure Unit:

Allows user to select a unit.

If necessary, refer to the following table to convert between units.

kPa	psi	bar	kgf/cm^2
200	29	2.0	2.0
210	30	2.1	2.1
220	32	2.2	2.2
230	33	2.3	2.3
240	35	2.4	2.4
250	36	2.5	2.5
250	36	2.5	2.5
260	38	2.6	2.6
270	39	2.7	2.7
280	41	2.8	2.8
290	42	2.9	2.9
300	44	3.0	3.0
310	45	3.1	3.1
320	46	3.2	3.2
330	48	3.3	3.3
340	49	3.4	3.4

Vehicle Settings

The vehicle settings allows user to change settings for the following menus.

- Power Back Door (if so equipped)
- Lighting
- Locking
- Wipers
- Personal Drive Mode
- Driving Position
- Rear Door Alert

The vehicle settings can be changed using the scroll dial.

Power Back Door (if so equipped):

This allows user to turn the power liftgate ON or OFF.

Lighting:

The "Lighting" menu has the following options:

- Welcome Lights

  Allows user to turn this feature ON or OFF.
- Light Off Delay

  The duration of the automatic headlights can be changed from 0 to 180 seconds. Use the scroll dial to change the duration.
- Headlights with Wipers

  When this item is on, the headlights will turn on when the wipers are activated.

Locking:

The "Locking" menu has the following options:

- Selective Unlock

  When this item is turned on, only the corresponding door is unlocked when

using the capacitive unlock sensor on the driver's door handle or the request switch. All the doors can be unlocked if the lock sensor or the request switch is used again within 1 minute. When this item is turned to off, all the doors will be unlocked when using the capacitive unlock sensor or the request switch once.

If the approach unlock function is activated while the selective unlock function is turned on, the selective unlock function is deactivated automatically. If the selective unlock function is activated while the approach unlock function is turned on, the approach unlock function is deactivated automatically.

- Horn beeps on lock

  This allows user to turn the function ON or OFF

- Auto Door Unlock

  The feature allows user to customize the auto door unlock options. Use the scroll dial to change the mode.

  – Shift to P
  – Power OFF
  – OFF

- Walk Away Lock

  This allows user to turn the walk away lock function ON or OFF. (See "Walk away lock function" (P.273).)

- Approach Unlock

  This allows user to turn the approach unlock function ON or OFF. (See "Approach unlock function" (P.272).)

  If the approach unlock function is activated while the selective unlock function is turned on, the selective unlock function is deactivated automatically. If the selective unlock function is activated while the approach unlock function is turned on, the approach unlock function is deactivated automatically.

- Ext. Door Switch

  When this item is turned on, the lock or capacitive unlock sensors (on the front door handles) and the request switch are activated.

Wipers:

The “Wipers” menu has the following options:

- Speed Dependent (if so equipped)

  The feature can be activated or deactivated.

- Rain Sensor (if so equipped)

  Allows user to turn this feature ON or OFF.

- Drip Wipe

  Allows user to turn this function ON/OFF.

Personal Drive Mode:

The “Personal Drive Mode” has the following options.

- Acceleration

  Allows user to select an item below.

  – SPORT
  – STANDARD
  – ECO

- Regeneration (if so equipped)

  Allows user to select the regeneration intensity from level 1 to level 4

  As the level increases, the regeneration intensity becomes stronger.

  This will be the setting for the initial level of paddle selector when the PERSONAL mode is selected.

- Steering

  Allows user to select an item below.

  – SPORT
  – STANDARD

- Reset

  Allows user to reset the items to default.

Driving Position (if so equipped):

- Exit Seat Slide

  This allows user to turn this feature ON or OFF. (See "Memory seat (if so equipped)" (P.292).)

Rear Door Alert:

Type A (if so equipped):

This allows user to customize the Rear Door Alert options. Use the scroll dial to change the mode.

- Horn & Alert
- Alert Only
- OFF

(See "Rear Door Alert" (P.228).)

Type B (if so equipped):

This allows user to turn the Rear Door Alert ON or OFF.

(See "Rear Door Alert" (P.228).)

Clock

Allows user to turn the clock display ON/OFF.

The clock may also be set in the touch screen display. For additional information, refer to the separate NissanConnect® Owner's Manual.

EV Settings

- Chg. Connector Lock

  Allows user to select an item below.

  – AUTO
  – LOCK
  – UNLOCK

- Power for Est. Time

  Allows the user to select a charging speed to get an estimate for charging times.

  – MAX (DC)
  – 50 kW (DC)
  – 7.2 kW (Level 2)
  – 1.4 kW (Level 1)

- V2L Power Outlet

  – Min. Battery Level

    Allows user to select the minimum battery level for using the V2L power outlet from 10% to 95%

  – Always Show Status

    When this item is ON, the status display will always be appeared when using the V2L function with the power switch turned off.

- Charge Reminder

  Allows user to select the charge reminder display timing before empty from 50 - 120 miles (50 - 120 km) in 10 miles (10 km) increments.

- Charge Limit

  Allows user to select the maximum charge level of the Li-ion battery from 40% to 100%.

Maintenance

The following items are available in this menu.

- Tire
- Other

Tire:

This indicator appears when the user set distance comes for replacing tires. You can set or reset the distance for replacing tires.

WARNING

The tire replacement indicator is not a substitute for regular tire checks, including tire pressure checks. (See "Changing wheels and tires" (P.538).) Many factors including tire inflation, alignment, driving habits and road conditions affect tire wear and when tires should be replaced. Setting the tire replacement indicator for a certain driving distance does not mean your tires will last that long. Use the tire replacement indicator as a guide only and always perform regular tire checks. Failure to perform regular tire checks, including tire pressure checks could result in tire failure. Serious vehicle damage could occur and may lead to a collision, which could result in serious personal injury or death.

Other:

This indicator appears when the user set distance comes for checking or replacing maintenance items other than tires. Other maintenance items can include such things as tire rotation. You can set or reset the distance for checking or replacing the items.

Customize Display

The Customize Display allows user to choose from the various meter selections.

The Customize Display can be changed using the scroll dial.

Change Meter View:

Allows user to change meter screen view.

Main Menu Selection:

Displays available screens that can be shown in the vehicle information display.

Route Guidance (if so equipped):

- Alerts

Allows user to turn the Navigation Settings alerts ON or OFF.

ProPILOT Assist Display:

Allows user to turn the ProPILOT Assist Display transition ON or OFF.

Welcome Effect:

The “Welcome Effect” displays the available welcome effect settings.

- Animation
- Sound

Operation Guidance:

The “Operation Guidance” displays the available operation guidance settings.

- Lights
- Wiper
  - Front
- High Beam Assist
- Seat Memory (if so equipped)

Unit/Language

The units or language that are shown in the vehicle information display can be changed:

- Mileage/Energy
- Tire Pressure
- Temperature
- Language

Use the scroll dial to select and change the units of the vehicle information display.

Mileage/Energy:

The unit for the mileage that is shown in the vehicle information display can be changed.

Tire Pressure:

The unit for tire pressures that is shown in the vehicle information display can be changed.

(See "TPMS setting" (P.175).)

Temperature:

The temperature that is shown in the vehicle information display can be changed.

Language:

The language of the vehicle information display can be changed.

Factory Reset

The settings in the vehicle information display can be reset back to the factory default. To reset the vehicle information display:

1. Select “Factory Reset” using the scroll dial and push it.
2. Select “Yes” to return all settings back to default by pushing the scroll dial.

VEHICLE INFORMATION DISPLAY WARNINGS AND INDICATORS

Basic information

The displayed images and the displayed items may differ depending on the model.

Push brake and power switch to drive indicator

Push brake and power switch to drive

This indicator appears while the vehicle is in the P (Park) position.

This indicator means that the EV system will start when the power switch is pushed with the brake pedal depressed.

Key Not Detected warning

Key Not Detected
Please ensure a valid key is present in the vehicle

This warning appears in either of the following conditions:

No key inside the vehicle:

This warning appears when the door is closed with the Intelligent Key left outside the vehicle and the power switch in the READY to drive position. Make sure that the Intelligent Key is inside the vehicle.

Unregistered Intelligent Key:

This warning appears when the power switch is changed to the READY to drive position from the OFF position and the Intelligent Key cannot be recognized by the system. You cannot place the power switch in the READY to drive position with an unregistered key. Use an Intelligent Key that has been registered.

Hold Power to turn off car indicator

Hold Power to turn off car
Key is required for restarting

This indicator appears when you try to turn off the EV system with the door closed and the Intelligent Key left outside the vehicle and the EV system is running. Push and hold the power switch to turn off the EV system.

(See "Intelligent Key system" (P.267).)

Key Battery Low warning

Key Battery Low

This warning appears when the Intelligent Key battery is running out of power.

If this indicator appears, replace the battery with a new one. See "Intelligent Key battery replacement" (P.525).

Hold Key Near Start Button indicator

Place the key near the power switch

This indicator appears when the Intelligent Key battery is running out of power and when the Intelligent Key system and vehicle are not communicating normally.

If this indicator appears, touch the power switch with the Intelligent Key while depressing the brake pedal. (See "Intelligent Key battery discharge" (P.342).)

Key System Error: See Owner's Manual warning

Key System Error
See Owner's Manual

This warning appears if there is a malfunction in the Intelligent Key system.

If this warning appears while the traction motor is stopped, the power switch cannot be switched to the READY to drive position. If this warning appears while the power switch is in the READY to drive position, the vehicle can be driven. However, it is recommended that you contact a NISSAN certified LEAF dealer.

Shift to P range warning

Shift to Park

This warning appears when the driver's door is opened while the shift position is in any position other than P (Park).

If this warning appears, push the P (Park) button to engage the P (Park) position.

An inside warning chime will also sound. (See "Intelligent Key system" (P.267).)

Release Parking Brake warning

Release Parking Brake

This warning appears when the accelerator pedal is depressed when the electronic parking brake automatic release function cannot be used. Release the electronic parking brake manually.

Door/liftgate open warning

This warning appears if any of the doors and/or the liftgate are open or not closed securely. The vehicle icon indicates which door or the liftgate is open on the display.

Rear seat belt warning

This rear seat belt warning appears after the power switch is placed in the ON position. If any of the rear passenger's seat belts is not fastened, the seat icon illuminates in red to show which seat belt is not fastened. The seat icon illuminates in red until the corresponding rear passenger's seat belt is fastened. The warning will automatically turn off after approximately 65 seconds. If so equipped, the seat icon will turn gray (or green, depending on the models) if the seat is occupied and the passenger is buckled. If a rear passenger seat belt is fastened then unfastened at a vehicle speed less than approximately 10 MPH (15 km/h), the seat icon will illuminate. When the vehicle speed exceeds approximately 10 MPH (15 km/h), the seat icon will blink and the chime will sound. The warning will turn off when a rear passenger seat belt is fastened or automatically turn off approximately 65 seconds after the seat belt is unfastened. For precautions on seat belt usage, see "Seat belts" (P.96).

Low Washer Fluid warning (if so equipped)

Low Washer Fluid

This warning appears when the window washer fluid is at a low level. Add window washer fluid as necessary. For additional information, refer to "Window washer fluid" (P.521).

Tire Pressure Low - Add Air warning

Tire Pressure Low
Add Air

This warning appears when the low tire pressure warning light in the meter illuminates and low tire pressure is detected. The warning appears each time the power switch is placed in the ON position as long as the low tire pressure warning light remains illuminated. If this warning appears, stop the vehicle and adjust the pressure to the recommended COLD tire pressure shown on the Tire and Loading Information label. (See "Low tire pressure warning light" (P.165) and "Tire Pressure Monitoring System (TPMS)" (P.333).)

Tire Pressure Low Check Cold Tire warning

Tire Pressure Low
Check Cold Tire

This warning appears if the tire pressure becomes higher than the target pressure during a low tire pressure condition.

Even if the tire pressure is above the preset target pressure, the yellow color in the tire pressure warning means that the tire pressure is actually too low. Tire pressure is increasing during driving. Check the tire pressure when the tire is cold.

When parked apply parking brake warning

When parked
Apply parking brake &
Turn off power switch

This warning appears if a malfunction occurs in the electric shift control system. It is recommended that you contact a NISSAN certified LEAF dealer as soon as possible. When parking the vehicle, make sure that the parking brake is applied. If the parking brake is not applied, the power switch may not be turned off.

If the power switch cannot be placed in the OFF position, apply the parking brake and then place it in the OFF position.

The message on the vehicle information display turns off and the chime stops. Have the system checked. It is recommended that you visit a NISSAN certified LEAF dealer.

T/M system malfunction warning

T/M system malfunction
Visit dealer

This warning appears if there is a malfunction in the electric shift control system.

- When shifting, hold the shift button in the shift position and check the shift position indicator on the shift button or on the vehicle information display to make sure that shifting has been performed properly.
- When parking, push the P (Park) button to engage the P (Park) position. (The vehicle may not automatically apply the P (Park) position.)

Have the system checked as soon as possible. It is recommended that you contact a NISSAN certified LEAF dealer for this service.

Shift position indicator

P

This indicator shows the shift position.

See "Electric shift control system" (P.343) for further details.

Drive Mode Selector indicator

ECO

When a driving mode is selected using the Drive Mode Selector, the selected mode indicator is displayed.

- PERSONAL
- SPORT
- STANDARD
- ECO

(See "Drive Mode Selector" (P.357).)

e-Step indicator

e-Step

This indicator shows the status of the e-Step system. (See "e-Step indicator" (P.158) and "e-Step system" (P.348).)

e-Step system Unavailable warning

e-Step system Unavailable To slow press brake pedal

This warning message appears when the e-Step system is temporarily unavailable. Stop the vehicle in a safe location. Turn the EV system off and restart the EV system. If the warning message continues to appear, have the system checked. It is recommended that you visit a NISSAN certified LEAF dealer.

Steering system malfunction Stop safely warning

Steering system malfunction Stop safely

When this warning appears, the electric power steering does not operate. Stop the vehicle in a safe place immediately. Have the system checked. It is recommended that you visit a NISSAN certified LEAF dealer for this service. (See "Electric power steering" (P.461).)

Steering system malfunction Visit dealer warning

Steering system malfunction Visit dealer

When this warning appears, the power assist to the steering is lowered. At this time, greater steering efforts are required. Securely grip the steering wheel and operate it with greater force than usual. Have the system checked. It is recommended that you visit a NISSAN certified LEAF dealer for this service. (See "Electric power steering" (P.461).)

Shipping Mode On Push Storage Fuse warning

Shipping Mode On Push Storage Fuse

This warning may appear if the extended storage switch is not pushed in. When this warning appears, it is recommended that you contact a NISSAN certified LEAF dealer.

Power will turn off to save the battery warning

Power will turn off to save the battery

Under the specific conditions, this warning may appear after the power switch is in the ON position for a certain period of time.

Power turned off to save the battery warning

Power turned off to save the battery

Under the specific conditions, this warning may appear after the power switch is automatically turned OFF to save the battery.

Reminder Turn OFF Headlights warning

Reminder
Turn OFF Headlights

This warning appears when the driver side door is opened with the headlight switch is left ON and the power switch is placed in the OFF position. Place the headlight switch in the OFF (if so equipped) or AUTO position. For additional information, see "Headlight and turn signal switch" (P.216).

Headlight System Error: See Owner's Manual warning

Headlight System Error
See Owner's Manual

This warning appears if the LED headlights are malfunctioning. Have the system checked. It is recommended that you visit a NISSAN certified LEAF dealer for this service.

Time for a break? indicator

Time for a break?

This indicator appears when the set Timer Alert activates. You can set the time for up to 6 hours.

Chassis Control System Error: See Owner's Manual warning

Chassis Control System Error
See Owner's Manual

This warning appears if the chassis control module detects a malfunction in the chassis control system. Have the system checked. It is recommended that you visit a NISSAN certified LEAF dealer for this service.

Battery Low Please Charge Soon indicator

Battery Low
Please Charge
Soon

This charge reminder appears when the set remaining driving distance that corresponds to the remaining charge of the Li-ion battery is reached. The driver can set when the charge reminder will be triggered.

See "EV Settings" (P.177).

Battery Low Please Charge Now warning

Battery Low
Please Charge
Now

This warning appears when the remaining driving distance is getting low. The low battery charge warning light and the master warning light also illuminate. Charge the Li-ion battery as soon as possible.

Power limitation (hot) warning

EV system hot
Power reduced
Drive slowly

This warning appears when the temperature of the traction motor, Li-ion battery, etc. becomes extremely high due to driving in high outside air temperatures, continuous driving at high speed or on uphill climbs, etc. when the power limitation

indicator illuminates. If this warning appears, vehicle speed will not increase due to the power limitation even if the accelerator pedal is depressed.

Power limitation (cold) warning

EV system cold
Power reduced

This warning appears when the temperature of Li-ion battery becomes extremely low under extremely low outside air temperatures, etc. when the power limitation indicator illuminates. If this warning appears, vehicle speed will not increase due to the power limitation even if the accelerator pedal is depressed.

Power limitation (low charge) warning

Battery charge is low
Power reduced
Charge now

This warning appears when the remaining capacity of Li-ion battery becomes extremely low when the power limitation indicator illuminates. If this warning appears, vehicle speed will not increase due to the power limitation even if the accelerator pedal is depressed.

If the warning appears due to the extremely low remaining capacity of Li-ion battery, stop the vehicle in a safe location and it is recommended that you contact a NISSAN certified LEAF dealer.

Power limitation (other) warning

Power reduced

This warning appears due to reasons other than above power limitation warnings (hot, cold or low charge). If this warning appears, vehicle speed will not increase due to the power limitation even if the accelerator pedal is depressed.

Can't start Charging plug Connected warning

Can't start
Charging plug connected

This warning appears when the power switch is in the ON position and if the power switch is pushed to the READY to drive position with the brake pedal depressed, while the charge connector is inserted to the vehicle. Remove the charge connector.

Incompatible charger detected warning

Incompatible charger detected.
This charging port only supports
DC Fast Charging.

This warning appears when the NACS normal charge connector is connected to the DC Fast Charge port.

(Depending on the device, this warning may not be displayed.)

The charging cannot be performed in this condition.

Disconnect the NACS normal charge connector from the DC Fast Charge port and connect it to the normal charge port using a charging equipment recommended by NISSAN.

(See "How to normal charge (AC 220–240 volt) by charging device" (P.47).)

Possible vehicle fire Stop safely Exit vehicle immediately warning

Possible vehicle fire
Stop safely
Exit vehicle immediately

This warning appears if the Li-ion battery

is malfunctioning and a danger of the Li-ion battery thermal runaway is detected while driving.

Pull off the road to a safe location immediately, leave the vehicle and it is recommended that you contact a NISSAN certified LEAF dealer.

Possible vehicle fire Exit vehicle immediately warning

Possible vehicle fire
Exit vehicle immediately

This warning appears if the Li-ion battery is malfunctioning and a danger of the Li-ion battery thermal runaway is detected when the vehicle is stopped.

Leave the vehicle and it is recommended that you contact a NISSAN certified LEAF dealer.

Service EV System Power Reduced Stop Safely warning

Service EV System Power Reduced
Stop Safely

This warning appears if there is a malfunction in the EV system and the power provided to the traction motor is reduced.

The message will vary depending on the condition of the system malfunction. Be sure to follow the displayed instruction.

12V POWER System ERROR Visit dealer warning

12V POWER System ERROR
Visit dealer

This warning appears when there is a malfunction with the 12-volt battery system.

If this warning continues to appear, have the system checked. It is recommended that you visit a NISSAN certified LEAF dealer for this service.

Lane Departure Warning (LDW)/ Intelligent Lane Intervention (I-LI) indicator

This indicator appears when the Lane Departure Warning (LDW) and/or Intelligent Lane Intervention (I-LI) systems are engaged.

(See "Lane Departure Warning (LDW)" (P.372) or "Intelligent Lane Intervention (I-LI)" (P.377).)

Blind Spot Warning (BSW)/Intelligent Blind Spot Intervention (I-BSI) indicator

This indicator appears when the Blind Spot Warning (BSW) and/or Intelligent Blind Spot Intervention (I-BSI) systems are engaged.

(See "Blind Spot Warning (BSW)" (P.383) or "Intelligent Blind Spot Intervention (I-BSI)" (P.391).)

Vehicle ahead detection indicator

This indicator shows the status of the following systems:

- Automatic Emergency Braking (AEB) with Pedestrian Detection
- Intelligent Forward Collision Warning (I-FCW)
- ProPILOT Assist

(See "Automatic Emergency Braking (AEB) with Pedestrian Detection system" (P.429), "Intelligent Forward Collision Warning (I-FCW)" (P.442) or "ProPILOT Assist Systems" (P.409).)

Cruise indicator

This indicator shows the conventional (fixed speed) cruise control mode status. The status is shown by the color. (See "ProPILOT Assist Systems" (P.409).)

Speed control status/set distance/ lane marker indicator

This indicator shows the status of the ProPILOT Assist system and the detection of the lane markers. The status is shown by the color and shape. (See "ProPILOT Assist Systems" (P.409).)

ProPILOT Assist system status indicator

This indicator appears when the following systems are turned on:

- ProPILOT Assist

(See "ProPILOT Assist Systems" (P.409).)

Steering Assist guidance

Steering Assist ON

Steering Assist OFF

This message appears when the Steering Assist system is turned on or off.

See "ProPILOT Assist Systems" (P.409).

Steering Assist indicator

This indicator appears when the Steering Assist system is engaged.

See "ProPILOT Assist Systems" (P.409).

Hands on detection warning (if so equipped)

Take Steering Control / Slowing to Stop

This warning may appear when the Steering Assist system is engaged and the following condition(s) occur:

- When not holding the steering wheel
- When there is no steering wheel operation

Hold on the steering wheel immediately. When the steering operation is detected, the warning turns off and the Steering Assist function is automatically restored. For additional information, refer to "ProPILOT Assist Systems" (P.409).

Rear Automatic Braking (RAB) system warning indicator

This warning indicator appears to indicate the status of the Rear Automatic Braking (RAB) system.

See "Rear Automatic Braking (RAB)" (P.453).

Automatic Emergency Braking (AEB) emergency warning indicator

This warning indicator appears along with an audible warning, when the Automatic Emergency Braking (AEB) with Pedestrian Detection system detects the possibility of a forward collision.

See "Automatic Emergency Braking (AEB) with Pedestrian Detection system" (P.429).

Malfunction See Owner's Manual warning

Malfunction
See Owner's Manual

This warning appears when the following systems (if so equipped) malfunction.

- Traffic Sign Recognition (TSR)
- Lane Departure Warning (LDW)
- Intelligent Lane Intervention (I-LI)
- Blind Spot Warning (BSW)
- Intelligent Blind Spot Intervention (I-BSI)
- ProPILOT Assist
- Steering Assist
- Rear Automatic Braking (RAB)
- Intelligent Driver Alertness (I-DA)
- Rear Cross Traffic Alert (RCTA)
- Automatic Emergency Braking (AEB) with Pedestrian Detection
- Intelligent Forward Collision Warning (I-FCW)

(See "Traffic Sign Recognition (TSR)" (P.368), "Lane Departure Warning (LDW)" (P.372), "Intelligent Lane Intervention (I-LI)" (P.377), "Blind Spot Warning (BSW)" (P.383), "Intelligent Blind Spot Intervention (I-BSI)" (P.391), "Rear Cross Traffic Alert (RCTA)" (P.402), "ProPILOT Assist Systems" (P.409), "Rear Automatic Braking (RAB)" (P.453), "Intelligent Driver Alertness (I-DA)" (P.450), "Automatic Emergency Braking (AEB) with Pedestrian Detection system" (P.429) or "Intelligent Forward Collision Warning (I-FCW)" (P.442).)

Unavailable Camera Temperature High warning

Unavailable
Camera Temperature High

This warning appears if the interior temperature of the vehicle has reached such a high temperature that the sensor for the following systems (if so equipped) can no longer function reliably.

- Lane Departure Warning (LDW)
- Intelligent Lane Intervention (I-LI)
- Intelligent Blind Spot Intervention (I-BSI)
- Steering Assist

Once the interior temperature has reached normal levels, the warning should disappear.

If the warning continues to display, have the system checked. It is recommended that you visit a NISSAN certified LEAF dealer for this service.

For additional information, refer to "Lane Departure Warning (LDW)" (P.372), "Intelligent Lane Intervention (I-LI)" (P.377), "Intelligent Blind Spot Intervention (I-BSI)" (P.391) or "Steering Assist" (P.425).

Driving Aids temporarily limited Front Camera Too Hot warning

Driving Aids temporarily limited
Front Camera Too Hot

This warning appears if the interior temperature of the vehicle has reached such a high temperature that the sensor for the following systems can no longer function reliably.

- Automatic Emergency Braking (AEB) with Pedestrian Detection system

Once the interior temperature has reached normal levels, the warning should disappear.

If the warning continues to display, have the system checked. It is recommended that you visit a NISSAN certified LEAF dealer for this service.

(See "Automatic Emergency Braking (AEB) with Pedestrian Detection system" (P.429).)

Currently Unavailable warning

Currently Unavailable

This warning appears when the following systems (if so equipped) become unavailable because the Vehicle Dynamic Control (VDC) system is turned off.

- Intelligent Lane Intervention (I-LI)
- Intelligent Blind Spot Intervention (I-BSI)
- ProPILOT Assist

For additional information, refer to "Vehicle Dynamic Control (VDC) system" (P.466), "Intelligent Lane Intervention (I-LI)" (P.377), "Intelligent Blind Spot Intervention (I-BSI)" (P.391), "ProPILOT Assist Systems" (P.409).

Limited driver's aid VDC setting OFF warning

Limited driver's aid
VDC setting OFF

This warning appears when the Vehicle Dynamic Control (VDC) system is OFF. The Automatic Emergency Braking (AEB) with Pedestrian Detection system will not operate. In this case only visible and audible warning operates.

Forward Driving Aids temporarily disabled Front Sensor blocked See Owner's Manual warning

Forward Driving Aids temporarily disabled
Front Sensor blocked
See Owner's Manual

If the front radar sensor area on the front of the vehicle is covered with dirt or obstructed, making it impossible to detect a vehicle ahead, the following system is automatically turned off.

- ProPILOT Assist

If the warning message appears, park the vehicle in a safe location and turn the EV system off.

Check to see if the sensor area is blocked. If the sensor area is blocked, remove the blocking material. Restart the EV system. If the warning message continues to appear, have the system checked. It is recommended that you visit a NISSAN certified LEAF dealer for this service.

For more details, see "ProPILOT Assist Systems" (P.409).

Driving Aids Temporarily disabled Clean sensor area See Owner's Manual warning

Driving Aids
Temporarily disabled
Clean sensor area
See Owner's Manual

If the front radar sensor area on the front of the vehicle or the front camera area is covered with ice, dirt or obstructed, making it impossible to detect a vehicle ahead, the following system is automatically turned off.

- Automatic Emergency Braking (AEB) with Pedestrian Detection
- Intelligent Forward Collision Warning (I-FCW)

If the warning message appears, park the vehicle in a safe location and turn the EV system off.

Check to see if the sensor area is blocked. If the sensor area is blocked, remove the blocking material. Restart the EV system. If the warning message continues to appear, have the system checked. It is recommended that you visit a NISSAN certified LEAF dealer for this service.

For more details, see "Automatic Emergency Braking (AEB) with Pedestrian Detection system" (P.429) or "Intelligent Forward Collision Warning (I-FCW)"

(P.442).

Unavailable Side Radar Obstruction warning

Unavailable
Side Radar Obstruction

This warning appears when the following systems (if so equipped) become unavailable because a radar blockage is detected.

- Blind Spot Warning (BSW)
- Intelligent Blind Spot Intervention (I-BSI)
- Rear Cross Traffic Alert (RCTA)

(See "Blind Spot Warning (BSW)" (P.383), "Intelligent Blind Spot Intervention (I-BSI)" (P.391) or "Rear Cross Traffic Alert (RCTA)" (P.402).)

Unavailable Slippery Road warning

Unavailable
Slippery Road

This warning appears when the ProPILOT Assist become unavailable because the road is slippery.

(See "ProPILOT Assist Systems" (P.409).)

Unavailable Seatbelt is Unfastened indicator

Unavailable
Seatbelt is Unfastened

This message may appear when the ProPILOT Assist system is engaged.

Under the following condition, the ProPILOT Assist system is automatically canceled:

- When the driver's seat belt is not fastened.

The ProPILOT Assist system cannot be used when the driver's seat belt is not fastened.

Unavailable Adverse Weather indicator

Unavailable
Adverse Weather

This message may appear when the Steering Assist system is engaged.

Under the following conditions, the Steering Assist system is automatically canceled:

- When the wiper (HI) operates.
- When lane markers in the traveling lane cannot be correctly detected for a period of time due to such items as a snow rut, reflection of light on a rainy day or several unclear lane markers are present.

If you want to use the Steering Assist system again, cancel the ProPILOT Assist system and set it again when lane markers are clearly visible.

Unavailable Low Visibility indicator

Unavailable
Low Visibility

This message may appear when the Steering Assist system is engaged.

Under the following conditions, the Steering Assist system is automatically canceled:

- The camera area of the windshield is fogged up or covered with dirt, water, drops, ice, snow, etc.
- Strong light, such as sunlight or high beams from oncoming vehicles, enter the front camera

Driving Aids Temporarily limited Poor Visibility indicator

Driving Aids
Temporarily limited
Poor Visibility

This warning appears when the Automatic Emergency Braking (AEB) with Pedestrian Detection system is activated

and strong light, such as sunlight or high beams from oncoming vehicles, enter the front camera.

See "Automatic Emergency Braking (AEB) with Pedestrian Detection system" (P.429).

Steering Assist Not Available Cannot Detect Lane indicator

Steering Assist Not Available Cannot Detect Lane

This indicator may appear when the Steering Assist system is engaged. The Steering Assist system is automatically canceled when the lane markers in the traveling lane cannot be correctly detected for a period of time due to such items as a snow rut, reflection of light on a rainy day or several unclear lane markers are present.

If you want to use the Steering Assist system again, cancel the ProPILOT Assist system and set it again when lane markers are clearly visible.

Unavailable Parking Brake is ON indicator

Unavailable Parking Brake is ON

This message may appear when the ProPILOT Assist system is engaged.

Under the following condition, the ProPILOT Assist system is automatically canceled:

- The electronic parking brake is applied.

The above system cannot be used when the electronic parking brake is activated.

Step on Brake Now indicator

Step on Brake Now

This message may appear when the Intelligent Cruise Control (ICC) system is engaged and the following condition occurs:

- While the vehicle is stopped by the ICC system, the driver's door is opened but the electronic parking brake was not activated.

  Step on the brake pedal immediately.

Follow Vehicle Ahead indicator (if so equipped)

Follow Vehicle Ahead

When ProPILOT Assist is activated, if the vehicle ahead stops and your vehicle is stopped less than approximately 3 seconds, this message will appear. When the vehicle ahead begins to move, your vehicle will start moving automatically. (See "ProPILOT Assist Systems" (P.409).)

Only Available with ProPILOT Assist ON indicator

Only Available with ProPILOT Assist ON

This indicator appears when the Steering Assist switch is pushed while the ProPILOT Assist system is not turned on. (See "ProPILOT Assist Systems" (P.409).)

Driving Aids Temporarily limited Radar interference warning

Driving Aids Temporarily limited Radar interference

When the radar sensor picks up interference from another radar source, this warning message will appear in the vehicle information display and the AEB system OFF warning light will illuminate.

When the above condition no longer exists, the AEB with Pedestrian Detection system and the I-FCW system will resume automatically.

(See "Automatic Emergency Braking (AEB) with Pedestrian Detection system" (P.429) and "Intelligent Forward Collision Warning (I-FCW)" (P.442).)

Driving Aids temporarily limited warning

Driving Aids temporarily limited

This warning appears under the following conditions when Automatic Emergency Braking (AEB) with Pedestrian Detection system is activated.

For the Automatic Emergency Braking (AEB) with Pedestrian Detection system:

- When the system check for the warning function did not end normally
- When the vehicle is towed

(See "Automatic Emergency Braking (AEB) with Pedestrian Detection system" (P.429).)

Sonar indicator

This indicator appears to indicate the status of the sonar system.

See "Front and rear sonar system (if so equipped)" (P.470) and "Rear Sonar System (RSS) (if so equipped)" (P.476).

Parking Sensor Error warning

Parking Sensor Error
See Owner's Manual

This warning appears when there is a malfunction with the sonar system. (See "Front and rear sonar system (if so equipped)" (P.470) and "Rear Sonar System (RSS) (if so equipped)" (P.476).)

Take a break? indicator

Take a Break?

This indicator appears when the Intelligent Driver Alertness (I-DA) system detect that the driver attention is decreasing. (See "Intelligent Driver Alertness (I-DA)" (P.450).)

Press brake pedal to prevent rolling warning

Press brake pedal to prevent rolling

This warning appears and a chime sounds if the vehicle moves while the automatic brake hold function is activated. Apply the foot brake to stop the vehicle moving.

Press brake to operate switch indicator

AUTO HOLD
Press brake to operate switch

This indicator appears if the automatic brake hold switch is pushed without depressing the brake pedal while the automatic brake hold function is activated. Depress the brake pedal and push the switch to deactivate the automatic brake hold function. (See "Automatic brake hold" (P.354).)

Caution Steep slope indicator

AUTO HOLD
Caution
Steep slope

This indicator appears and a chime sounds when the automatic brake hold function is activated while the vehicle is on a steep hill. Apply the foot brake to stop the vehicle moving. (See "Automatic brake hold" (P.354).)

Steep Slope Apply foot brake indicator

AUTO HOLD
Steep Slope
Apply foot brake

This indicator appears and a chime sounds if “Caution Steep slope” has appeared over about 3 minutes. Then, the parking brake will automatically be applied and the brake force of the automatic brake hold function will be released, and vehicle may move or roll away unexpectedly. Apply the foot brake to stop the vehicle moving. (See "Automatic brake hold" (P.354).)

Check Rear Seat indicator

Check Rear Seat
Dismiss Message
Disable Alert

When the system is enabled, this message appears when the vehicle comes to a complete stop, and the EV system is stopped. This message alerts the driver, after a period of time, to check for occupants or items in the rear seat after the audible alert has been provided.

Neutral Hold Mode guidance indicator

To Exit Vehicle In Neutral
Power ON, Brake ON
Push P, Shift into N twice
Push STOP

This indicator appears when the power switch is placed in the OFF position while the shift position is in the N (Neutral) position (Neutral hold mode is available). (See "Neutral hold mode function" (P.346).)

Neutral Hold Mode activated indicator

Neutral Hold Mode has been activated.
To exit this mode, please shift to a different gear.

This indicator appears when the Neutral hold mode is activated. To exit the Neutral hold mode, place the vehicle in other than N (Neutral) position. (See "Neutral hold mode function" (P.346).)

Neutral Hold Mode was not activated indicator

Neutral Hold Mode
was not activated.

This indicator appears when the Neutral hold mode is unavailable. To activate the Neutral hold mode, wait for a while without shifting and then perform the operations again. (See "Neutral hold mode function" (P.346).)

Secondary Collision Mitigation Braking malfunction warning

Secondary Collision
Mitigation Braking
malfunction
Visit Dealer

This warning appears when there is a malfunction with the braking system to mitigate the secondary collision (Secondary Collision Mitigation Braking (SCMB)). Have the system checked as soon as possible. It is recommended that you contact a NISSAN certified LEAF dealer for this service.

See "Secondary Collision Mitigation Braking (SCMB)" (P.465) for more details.

V2L Power Outlets will be stopped soon, Min. battery level is almost reached indicator (if so equipped)

V2L Power Outlets will be
stopped soon, Min. battery
level is almost reached

This indicator appears as a notification when the remaining capacity of the Li-ion battery level approaches the preset minimum battery limit when using the V2L

system. A chime will also sounds.

See "Vehicle to Load (V2L) system (if so equipped)" (P.233).

V2L Power Outlets stopped Min. battery level was reached indicator (if so equipped)

V2L Power Outlets stopped
Min. battery level
was reached

This indicator appears when the remaining capacity of the Li-ion battery reaches to the preset minimum battery level. A chime will also sounds.

When this indicator appears, the AC ON switch indicator light (for V2L inside) or the LED indicator of the Vehicle Load Connector (VLC) (for V2L outside) will go off. The power supply to the V2L will stop and the green flashing of the charging status indicator light will also turn off.

For the V2L outside, the power supply will restart if the preset minimum battery level is reset to a lower level than the current Li-ion battery state of charge.

See "Vehicle to Load (V2L) system (if so equipped)" (P.233).

V2L Power Outlets are unavailable warning (if so equipped)

V2L Power Outlets
are unavailable

This warning appears when the V2L is not activated even though the appropriate operation has been performed.

See "Vehicle to Load (V2L) system (if so equipped)" (P.233).

To change settings, go to V2L Power Outlets setting menu indicator (if so equipped)

To change settings,
go to V2L Power Outlets
setting menu

This indicator is displayed when the vehicle power is turned off, if the system is set so that V2L power supply information is not displayed while the vehicle power switch is OFF.

See "EV Settings" (P.177) and "Vehicle to Load (V2L) system (if so equipped)" (P.233).

V2L Power Outlets stopped due to electrical error Check owners manual warning (if so equipped)

V2L Power Outlets stopped
due to electrical error
Check owner's manual

If this warning appears when using the V2L system (V2L outside), the charging status indicator light flashes in red (see "Charging status indicator light" (P.75)) and the VSP sounds (see "Approaching Vehicle Sound for Pedestrians (VSP) system" (P.35)). Stop using the Vehicle Load Connector (VLC) and have the system checked. It is recommended you visit a NISSAN certified LEAF dealer for this service.

See "Vehicle to Load (V2L) system (if so equipped)" (P.233).

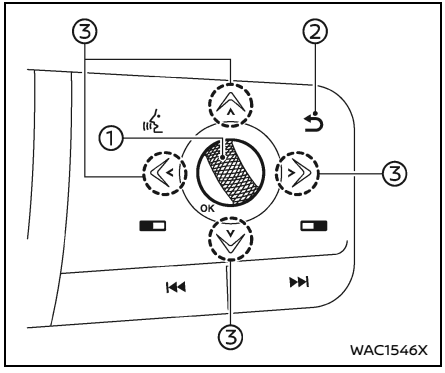

Example

TRIP COMPUTER

Basic information

Switches for the trip computer are located on the steering wheel.

① Scroll dial - navigate through the items and change or select an item in vehicle information display

this scroll dial allows up/down navigation and push to select

② ⮌ - go back to the previous menu

③ Up/down/left/right arrows - change from one display screen to the next (i.e. trip, Energy economy)

The displayed images may differ depending on the model.

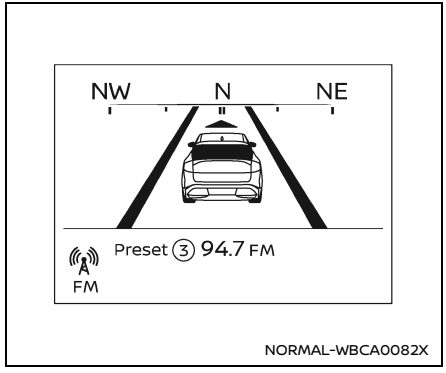

Example

Home

The Home mode shows the following information.

- Vehicle speed
- Navigation (if so equipped)
- Audio

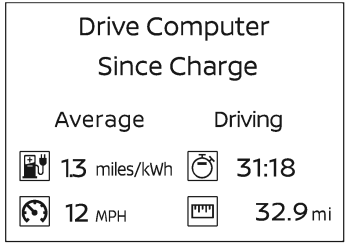

NORMAL-WBCA0067X

Drive Computer

Average energy consumption:

This shows the average energy consumption since the last reset.

Average speed:

This shows the average vehicle speed since the last reset.

Trip odometer:

This shows the total distance the vehicle has been driven since the last reset.

Elapsed time:

This shows the elapsed time since the last reset.

The Drive Computer mode has three modes of operation. You can switch between Since Reset, Since Start or Since Charge by pushing the scroll dial.

Since Reset can be reset manually by using the scroll dial.

Since Start will be reset automatically each time the power switch is placed in the READY to drive position.

Since Charge will be reset automatically each time when charging.

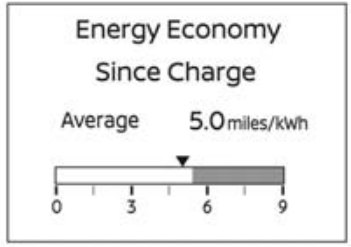

NORMAL-WBCA0083X

Energy Economy

Current energy consumption:

This shows the current energy consumption.

Average energy consumption:

This shows the average energy consumption since the last reset.

The Energy Economy mode has three modes of operation. You can switch between Since Reset, Since Start or Since Charge by pushing the scroll dial.

Since Reset can be reset manually by using the scroll dial.

Since Start will be reset automatically

each time the power switch is placed in the READY to drive position.

Since Charge will be reset automatically each time when charging.

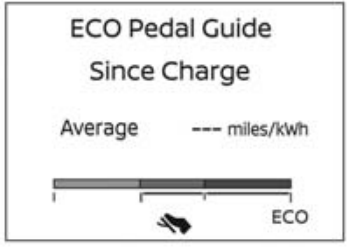

WAC1282X

ECO Pedal Guide

When the ECO mode is selected, you can view the ECO Pedal Guide function for improving energy economy.

(See "ECO Pedal Guide function" (P.359).)

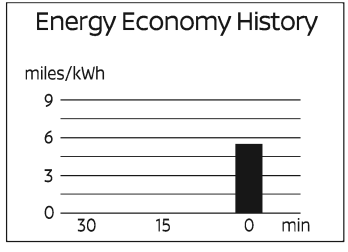

NORMAL-WBCA0088X

Example

Energy Economy History

The Energy Economy History mode shows the energy economy from the past hour by bar graph. The graph is updated every 5 minutes. The graph continues to be updated after the power switch is placed in the OFF position and will be reset after 30 minutes (in classic view) or 60 minutes (in enhanced view).

For classic view, see "Meters and gauges" (P.153).

For enhanced view, see "Changing the meter screen view" (P.154).

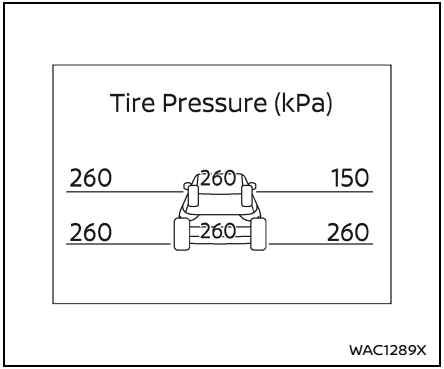

Tire Pressure

The Tire Pressure mode shows the pressure of all four tires while the vehicle is driven.

With the “Tire Pres ECO advice” function ON, when the tire pressure is getting low, ”Check Tire Pressures for Best Energy Economy” appears. (See "ECO Mode Setting" (P.175) and "Tire Pres ECO advice" (P.358).)

When the “Tire Pressure Low — Add Air” warning appears, the display can be switched to the tire pressure mode by pushing the scroll dial to reveal additional details on the displayed warning.

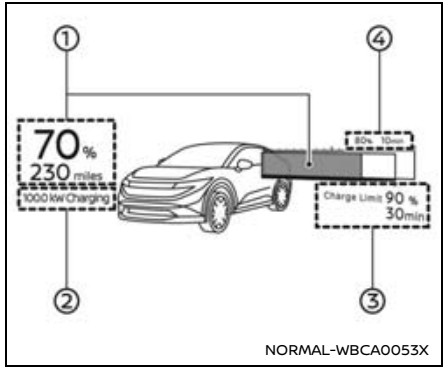

EV system OFF (full screen) (example)

Charge Information

The Charge Information mode shows the estimated time to charge the Li-ion battery to 80% of the full level, and to the set charge limit.

Correct estimated charge time will be displayed after 1 minute from placing the power switch in the ON position.

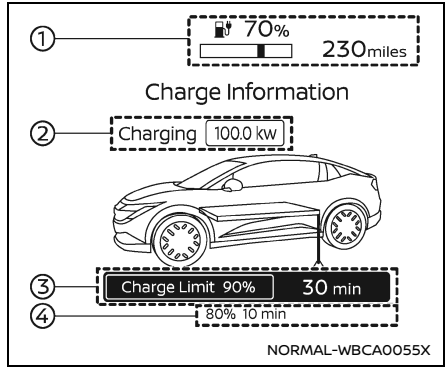

EV system ON (example)

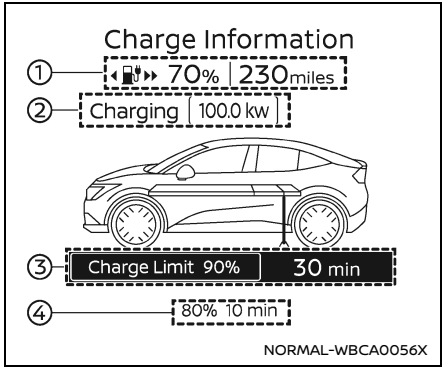

EV system OFF (next to other information) (example)

How to read the display:

Before charging starts, the displayed charging time is calculated based on the electrical power (supplied to the charger), which is selected in the "Power for Est. Time" setting under the EV Settings menu.

While charging, the charging time is calculated based on the actual electrical power.

The display shows:

① The current state of charge Li-ion battery

② The electrical power that is set by the driver (while not charging) or that is actually supplied (while charging)

③ The estimated charging time to reach the set charge limit (90% for this example)

④ The estimated charging time to reach the 80% of the full charge

NOTE:

- **If the estimated charging time is longer than 24 hours, "Over 24hr" is displayed in the vehicle information display.**
- **When the currently remaining Li-ion battery level exceeds the charge limit level, the charging time will be displayed as a blank.**
- **When the Li-ion battery was almost fully charged, all the charging time information will be displayed as a blank.**

When charging is not performed, pushing the scroll dial on the steering wheel will switch the display to the "Power for Est. Time" menu. Select the electrical power that you wish to show in the Estimated Charge Time display.

While charging, the scroll dial cannot be operated to switch to the "Power for Est. Time" menu.

NOTE:

- **While charging, the estimated charging time is calculated based on the electrical power that is currently supplied to the charger.**
- **For the DC Fast Charging, the electrical power display will change to the actual electrical power while charging. If the charging is stopped or the power supply is stopped (unplugged, etc.), the displayed electrical power returns to the selected electrical power.**
- **The displayed charging time on each percentage level is the current estimation, and the actual charging time will vary depending on the conditions of the vehicle or the state of charge.**
- **The actual charging time may be longer than the displayed charging time in cold weather.**
- **Right after starting or stopping charge, the estimated charging time may be differ from the actual charging time. The actual charging time will be displayed after a while.**

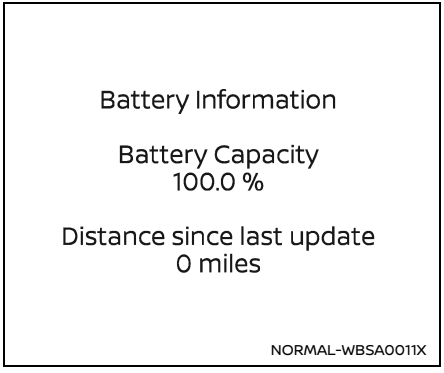

Battery Information

The Battery Information mode shows the amount of charge the Li-ion battery is capable of storing.

When the capacity of the Li-ion battery decreases with age and usage, the digits (%) will also decrease.

The distance since last update will reset to 0 once the battery capacity is updated.

The battery capacity (%) will not decrease if the Li-ion battery is not deteriorated.

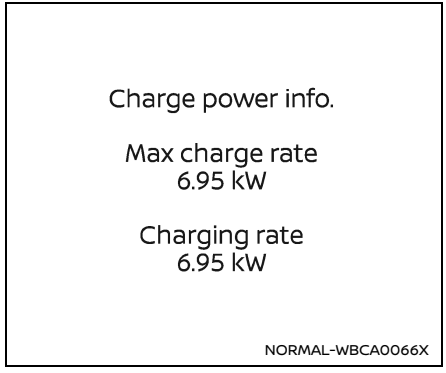

Example

Charge power information

The Charge power information mode shows the acceptable maximum charge rate (kW) and the current charge rate (kW) while charging.

When the vehicle in not charging, both digits shows "0".

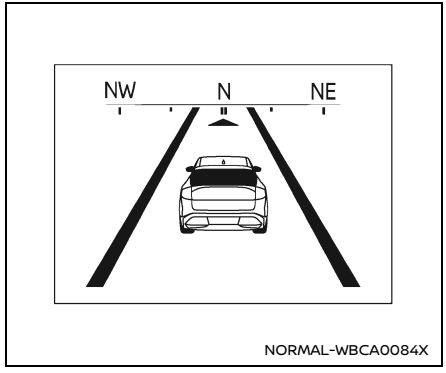

Compass (if so equipped)

The Compass mode shows the heading direction of the vehicle.

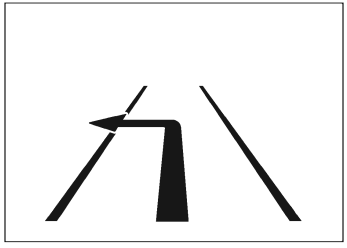

WAC1300X

Navigation (if so equipped)

The Navigation mode shows the navigation route information when the route guidance is set in the navigation system.

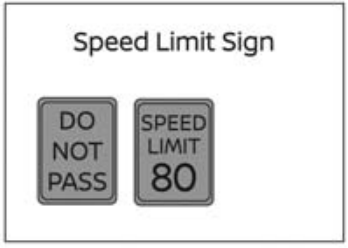

WAC1399X

Speed Limit Sign

The Traffic Sign Recognition (TSR) system provides the driver with information about the most recently detected speed limit. See "Traffic Sign Recognition (TSR)" (P.368) for more details.

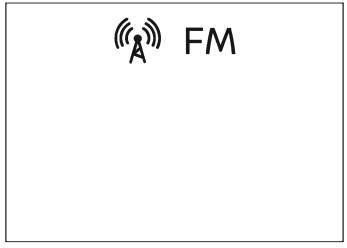

WAC1304X

Audio

The audio mode shows the status of audio information.

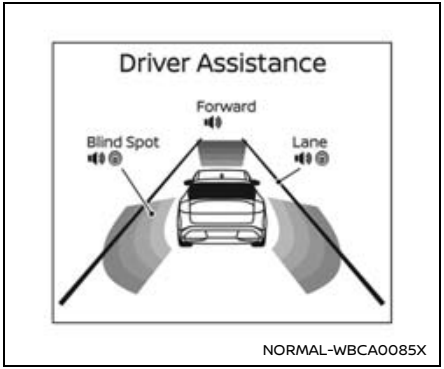

Driver Assistance

The Driver Assistance mode shows the operating condition for the following systems.

- Forward:
  - Automatic Emergency Braking (AEB) with Pedestrian Detection system
  - Intelligent Forward Collision Warning (I-FCW)
- Lane:
  - Lane Departure Warning (LDW)
  - Intelligent Lane Intervention (I-LI)
- Blind spot:
  - Blind Spot Warning (BSW)
  - Intelligent Blind Spot Intervention (I-BSI)

For more details, see "Driver Assistance display" (P.362).

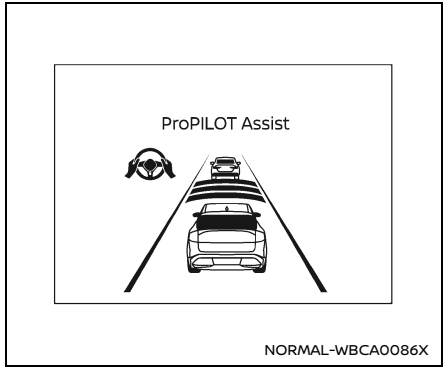

ProPILOT Assist

The ProPILOT Assist mode shows the operating conditions for the following systems:

- Intelligent Cruise Control (ICC)
- Steering Assist

The display will also be shown when the ProPILOT Assist system is turned on. For additional information, see "ProPILOT Assist Systems" (P.409).

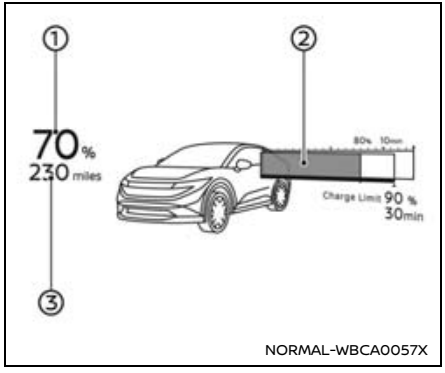

STATE OF CHARGE DISPLAY

The state of charge display appears for approximately 30 seconds when;

- The power switch is placed in the OFF position.
- A door is opened when the power switch is in the OFF position.
- The DC Fast Charge is started.
- Doors are unlocked during DC Fast Charge.

This figure ① shows the current state of charge (%) of the Li-ion battery.

The gauge ② shows the current state of charge of the Li-ion battery.

The driving range (miles or km) ③ provides an estimated distance that the vehicle can be driven before recharging is necessary.

ECO DRIVE REPORT

The ECO Drive Report appears for approximately 30 seconds when the power switch is placed in the OFF position after the vehicle was driven for more than 0.3 miles (500 m), and the scroll dial on the steering wheel is operated.

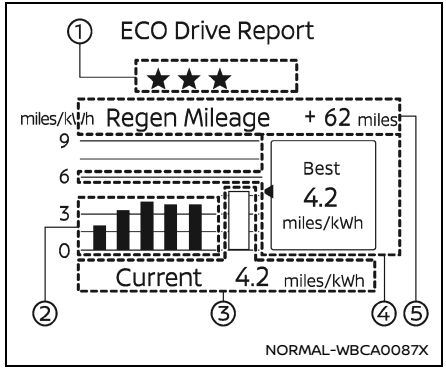

① ECO evaluation

The more economically you drive, the more ★ appears.

② Previous 5 times (History)

The average energy economy for the previous 5 times will be displayed.

③ Current energy economy

The most recent average energy economy will be displayed.

④ Best energy economy

The best energy economy in the history will be displayed.

⑤ Regenerated energy (mileage)

The amount of regenerated energy stored in the Li-ion battery in one trip will be displayed in terms of distance.

If the vehicle has been driven mostly on downhill roads, more energy is regenerated. This may cause the regenerated energy (mileage) ⑤ to show longer distance than the vehicle was driven, or the current energy economy ③ to show smaller value.

When the scroll dial on the steering wheel is pushed while the ECO Drive Report is shown, the display will be switched to the timer display. Either display will continue to be displayed for another 30 seconds when the button is operated. If the doors are locked after the power switch was placed in the OFF position, the display will turn off before the preset time.

In the Settings menu, you can set the ECO Drive Report not to appear when the power switch is placed in the OFF position. See "Settings" (P.172).

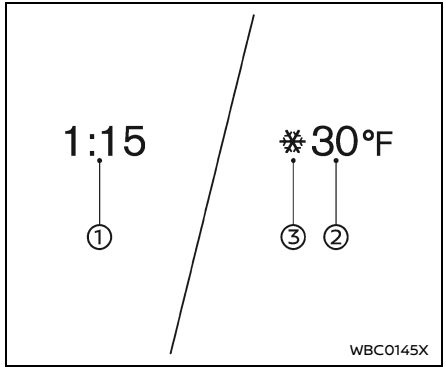

CLOCK AND OUTSIDE AIR TEMPERATURE

The clock ① is displayed on the upper side of the vehicle information display.

The outside air temperature ② is displayed on the lower side of the vehicle information display.

The displayed position varies depending on the meter screen view.

See "Changing the meter screen view" (P.154).

Clock

For clock adjustment, see "Clock" (P.177) or the separate NissanConnect® Owner's Manual.

Outside air temperature

The outside air temperature is displayed in °F or °C in the range of −40 to 140°F (−40 to 60°C).

The outside air temperature mode includes a low temperature alert feature. If the outside air temperature is below 27°F (−3°C), the indicator ③ is displayed.

The outside temperature sensor is located in front of the radiator. The sensor may be affected by road or EV system heat, wind directions and other driving conditions. The display may differ from the actual outside temperature or the temperature displayed on various signs or billboards.

BASIC INFORMATION

Some of the vehicle equipment/features can be operated using the touch screen display. See the NissanConnect® Owner's Manual for the basic usage of the touch screen display.

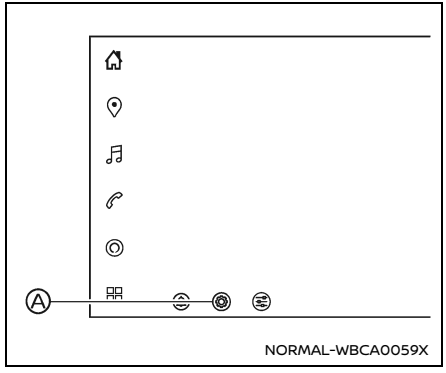

Example

Touch Ⓐ on the touch screen display to display “All Settings” menu.

Touch to select your desired item.

Available setting items vary depending on models, specifications, software versions and conditions.

See the following items for the vehicle-related equipment/features. For items other than those listed below, please refer to the separate NissanConnect® Owner's Manual.

VEHICLE

EV

See "EV Notifications settings" (P.38).

Camera

The following items for the camera can be adjusted or turned on or off. See "Intelligent Around View® Monitor" (P.298) for more details.

- Display Settings

  The following items can be adjusted.

  - Brightness
  - Contrast
  - Tint
  - Color
  - Black Level
- Saved Locations

  Allows user to change or delete the registered locations.
- Automatic 360° Moving

  Allows user to turn this function ON/OFF. If this item is ON, the 3D view of the vehicle will turn 360° when the Camera button is pushed first time after the power switch ON.

- Vehicle Color

  Allows user to change the vehicle color viewed in the Intelligent Around View® Monitor.

Climate

The following items for the air conditioner can be adjusted or turned on or off. See "Heater and air conditioner" (P.318) for more details about the air conditioner.

- Heated Steering Wheel Sensitivity (if so equipped)

  Allows user to select your preferred sensitivity from below.

  OFF, 1, 2 or 3
- Driver Auto Seat Sensitivity

  Allows user to select your preferred sensitivity from below.

  OFF, 1, 2 or 3
- Passenger Auto Seat Sensitivity

  Allows user to select your preferred sensitivity from below.

  OFF, 1, 2 or 3
- Climate Schedule

  Allows user to select your preferred Climate Schedule. See "Climate Schedule" (P.324).

Seat

The following items for the seat can be adjusted or turned on or off. See "Seats" (P.85) for more details.

- Driver's Seat Pop-up

  Allows user to turn the display pop up function for the driver's seat ON/OFF.

Interior Light

The following items for the interior light can be adjusted or turned on or off. See "Interior lights" (P.255).

Following items are available.

- Accent Lighting

  Allows user to set the brightness of the accent lighting.
- Ambient Lighting

  Allows user to turn the light ON/OFF, adjust the brightness and set the items below.

  (Locations)

  – Front

  (Colors)

  – ProPILOT Assist Mode

  – Delight (4 colors)

  – Discovery (4 colors)

  – Passion (4 colors)

  – Harmony (4 colors)

  – Additional (48 colors)

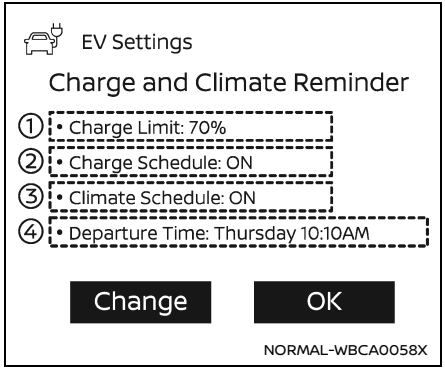

Example

CHARGE AND CLIMATE REMINDER DISPLAY

The Charge and Climate Reminder display appears for a period of time when;

- The power switch is turned OFF.
- The power switch is in the OFF position and the charging connector is connected.

① Charge Limit

Displays the set charge limit

② Charge Schedule

Displays the Charge Schedule status ON/OFF

③ Climate Schedule

Displays the Climate Schedule status ON/OFF

④ Departure Time

Displays the set departure time (day of week and time)

Touch "Change" and one of the above item to change the setting.

Touch "OK" to dismiss the display.

HEAD UP DISPLAY (HUD) (if so equipped)

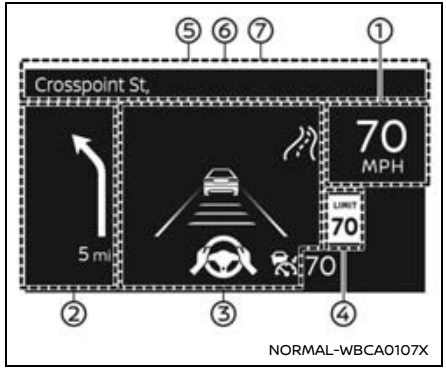

Example

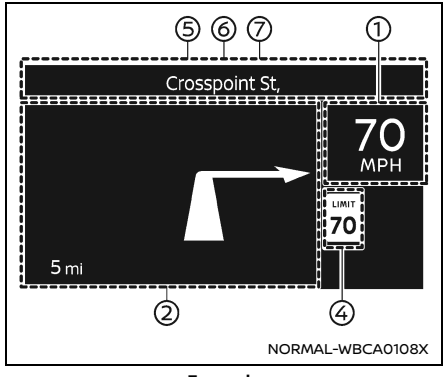

Example

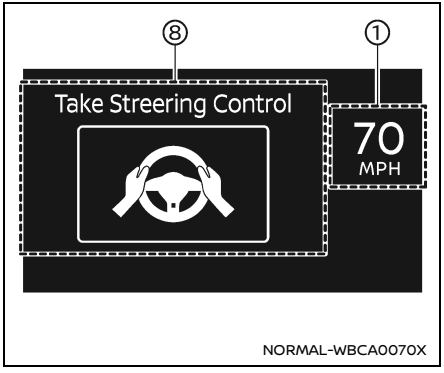

BASIC INFORMATION

WARNING

- **Failure to properly adjust the brightness and position of the displayed image may interfere with the driver's ability to see through the windshield, which could cause an accident leading to severe injury or death.**
- **Do not use the Head Up Display (HUD) for extended periods of time as that can cause you to not see other vehicles, pedestrians or objects, which could cause an accident leading to severe injury or death.**

The Head Up Display (HUD) can display one or more of the following features (if so equipped):

① Vehicle speed
② Navigation
③ Driving Assist
④ Traffic Sign
⑤ Audio
⑥ TEL/SMS
⑦ Message for Driver Assistance
⑧ Warning message

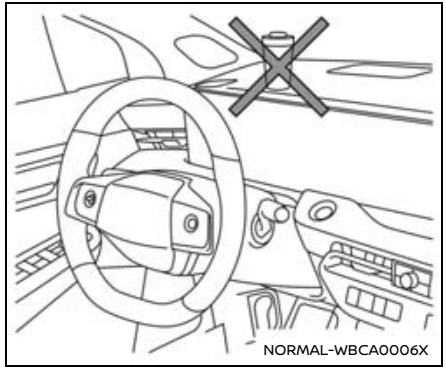

CAUTION

- **Do not place any type of liquid on or near the projector. Doing so may cause malfunction of the equipment.**
- **Do not touch any internal parts of the projector. Doing so may cause malfunction of the equipment.**
- **To prevent scratches to the projector glass, do not place any sharp objects on or near the projector opening.**

- **Do not place any objects on the instrument panel which may obstruct the display of the HUD.**
- **For cleaning, use a soft cloth, dampened with water. Never use a rough cloth, alcohol, benzine, thinner or any kind of solvent or paper towel with a chemical cleaning agent. They will scratch or cause discoloration to the projector lens.**
- **Do not spray any liquid such as water on the projector lens. Spraying liquid may cause the system to malfunction.**

NOTE:

- **If you wear polarized sunglasses, the display may be difficult to see. Increase the brightness of the HUD in the vehicle information display or remove your sunglasses.**
- **Depending on weather conditions (rain, snow, sunlight, etc.), the display may be difficult to see.**
- **If the displayed image appears distorted, it is recommended you have the system checked by a NISSAN certified LEAF dealer.**
- **The HUD has a special windshield to allow the image to be displayed clearly. If your windshield needs replacing, this should be completed by a NISSAN certified LEAF dealer.**
- **For cleaning, use a soft clean dry cloth. If it cannot be removed, use a soft clean cloth, dampened with water. After that please use a soft clean close.**

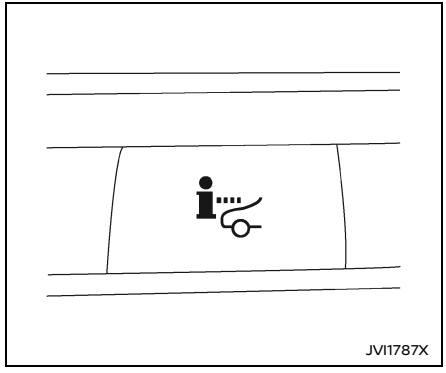

HOW TO USE THE HUD

Basic information

To turn the HUD on, push the HUD switch. To turn the HUD off, push the switch again.

If the HUD is turned off, it will remain off even if the vehicle is restarted.

The following settings can be changed in the vehicle information display:

- Brightness
- Height
- Rotation
- Contents selection
  - Navigation

- Driving Assist
- Speed Limit Sign
- Phone

- Reset

NOTE:
Emergency information may display even if the HUD is turned off.

This product includes the following software.

(1) Panasonic Corporation or software developed for Panasonic Corporation

(2) Third-party software licensed to Panasonic Corporation

(3) Open source software

Regarding (3) Open source software, it includes open source software (OSS), including various software to which license information applies.

Refer to the license web site at: http://car.panasonic.jp/oss/j03llnna

Display brightness

The brightness of the display may be controlled in the vehicle information display. The brightness will also be adjusted automatically according to the exterior ambient lighting brightness.

Do not apply strong light to the sensor of Head Up Display. Doing so may cause a malfunction.

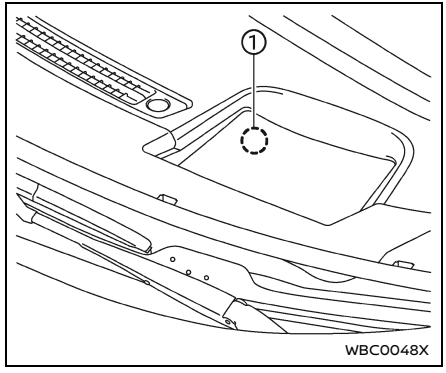

NOTE:
- **The HUD has a built-in sensor ① that controls the brightness of the displayed image. If you block the sensor with an object, the display will darken, making it difficult to see.**

DRIVER ASSISTANCE/NAVIGATION/TRAFFIC SIGN/AUDIO/PHONE/MESSAGE FOR DRIVER ASSISTANCE LINKING

The HUD will display Driver Assistance and navigation information.

The Driver Assistance display will show warning situations for the following systems if the vehicle is equipped with them:

- Automatic Emergency Braking (AEB) with Pedestrian Detection
- Intelligent Forward Collision Warning (I-FCW)
- Lane Departure Warning (LDW)
- Intelligent Lane Intervention (I-LI)
- Hands-free warning

The Navigation System linking display will show the following items:

- Intersection names
- Arrows indicating turning direction
- Distance to the next intersection
- Recommended lane indicator

The Traffic Signs Recognition (TSR) system linking display will show the following items:

- Speed Limit Sign

The Audio System linking display will show the following items:

- Songs
- Radio stations

The Phone linking display will show the following item:

- Caller's name or phone number

WARNING MESSAGE (if so equipped)

When the following system is operated, the warning message appears on the Head Up Display (HUD).

- ProPILOT Assist
- Automatic Emergency Braking (AEB) with Pedestrian Detection system

For details, see "Vehicle information display warnings and indicators" (P.179).

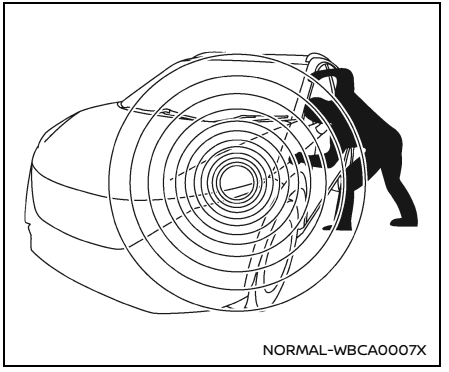

BASIC INFORMATION

Your vehicle has two types of security systems, as follows:

- Vehicle security system
- NISSAN Vehicle Immobilizer System

VEHICLE SECURITY SYSTEM

Basic information

The vehicle security system provides visual and audio alarm signals if someone opens the doors, hood and liftgate when the system is armed. It is not, however, a motion detection type system that activates when a vehicle is moved or when a vibration occurs.

The system helps deter vehicle theft but cannot prevent it, nor can it prevent the theft of interior or exterior vehicle components in all situations. Always secure your vehicle even if parking for a brief period. Never leave your keys in the vehicle, and always lock it when unattended. Be aware of your surroundings, and park in secure, well-lit areas whenever possible.

Many devices offering additional protection, such as component locks, identification markers, and tracking systems, are available at auto supply stores and specialty shops. Your NISSAN certified LEAF dealer may also offer such equipment. Check with your insurance company to see if you may be eligible for discounts for various theft protection features.

How to arm the vehicle security system

1. Close all windows. **The system can be armed even if the windows are open.**
2. Remove the keys from the vehicle.
3. Close all doors, hood and liftgate. Lock all doors. The doors can be locked with lock sensor (on the front door handles), Intelligent Key or the request switch (if so equipped).

Even when the driver and/or passen-

gers are in the vehicle, the system will activate with all the doors, hood and liftgate locked with the power switch placed in the OFF position. When placing the power switch in the ON position, the system will be released.

Vehicle security system activation

The vehicle security system will give the following alarm:

- The headlights blink and the horn sounds intermittently.
- The alarm automatically turns off after approximately 30 seconds. However, the alarm reactivates if the vehicle is tampered with again.

The alarm is activated by:

- opening any doors, the hood or liftgate without using the Intelligent Key, the capacitive unlock sensor (on the front door handles) or the request switch (even if the door is unlocked by releasing the door inside lock knob).

How to stop an activated alarm

The alarm stops by unlocking a door with the capacitive unlock sensor, pushing the UNLOCK button on the Intelligent Key, pushing the request switch or placing the power switch in the ON position.

NISSAN VEHICLE IMMOBILIZER SYSTEM

The NISSAN Vehicle Immobilizer System will not allow the power switch to be placed in the READY to drive position without the use of the registered key.

If the EV system does not start using the registered Intelligent Key, it may be due to interference caused by:

- Another Intelligent Key.
- Automated toll road device.
- Automated payment device.
- Other devices that transmit similar signals.

Start the EV system using the following procedure:

1. Remove any items that may be causing the interference away from the Intelligent Key.
2. Start the EV system again.

If this procedure allows the EV system to start, NISSAN recommends placing the registered Intelligent Key separate from other devices to avoid interference.

Statement related to section 15 of FCC rules for NISSAN Vehicle Immobilizer System (CONT ASSY-SMART KEYLESS)

NOTE:

FCC Notice:

For USA:

This device complies with Part 15 of the FCC Rules. Operation is subject to the following two conditions: (1) this device may not cause harmful interference, and (2) this device must accept any interference received, including interference that may cause undesired operation.

NOTE:

Changes or modifications not expressly approved by the party responsible for compliance could void the user's authority to operate the equipment.

For Canada:

This device contains licence-exempt transmitter(s)/receiver(s) that comply with Innovation, Science and Economic Development Canada's licence-exempt RSS(s). Operation is subject to the following two conditions: (1) This device may not cause interference. (2) This device must accept any interference, including interference that may cause undesired operation of the device.

WIPER AND WASHER SWITCH

BASIC INFORMATION

WARNING

In freezing temperatures the washer solution may freeze on the windshield and obscure your vision which may lead to an accident. Warm windshield with the defroster before you wash the windshield.

CAUTION

- **Do not operate the washer continuously for more than 30 seconds.**
- **Do not operate the washer if the reservoir tank is empty.**
- **Do not fill the window washer reservoir tank with washer fluid concentrates at full strength. Some methyl alcohol based washer fluid concentrates may permanently stain the grille if spilled while filling the window washer reservoir tank.**
- **Pre-mix washer fluid concentrates with water to the manufacturer's recommended levels before pouring the fluid into the window washer reservoir tank. Do not use the window washer reservoir tank to mix the washer fluid concentrate and water.**

If the windshield wiper operation is interrupted by snow or ice, the wiper may stop moving to protect its motor. If this occurs, turn the wiper switch to the OFF position and remove the snow or ice that is on and around the wiper arms. In approximately 1 minute, turn the switch on again to operate the wiper.

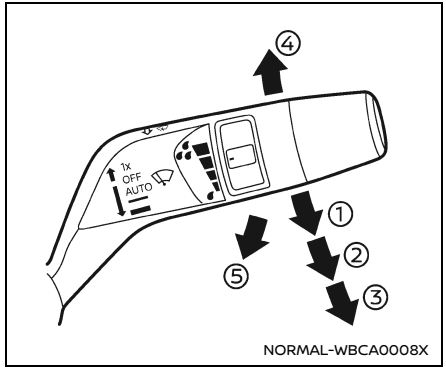

Type A (if so equipped)

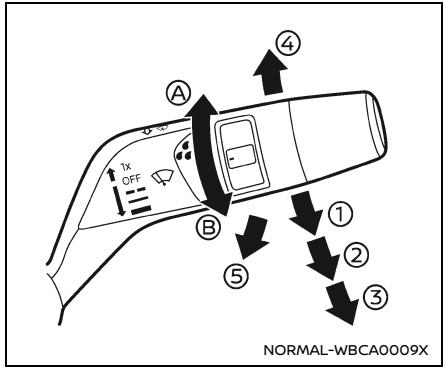

Type B (if so equipped)

WINDSHIELD WIPER AND WASHER OPERATION

The windshield wiper and washer operates when the power switch is in the ON position.

Push the lever down to operate the wiper at the following speed:

① Type A: AUTO — see "Rain-sensing auto wiper system (if so equipped)" (P.214).

Type B: Intermittent — intermittent operation can be adjusted by turning the knob toward Ⓐ (Faster) or Ⓑ (Slower). Also, the intermittent operation speed varies in accordance with the vehicle speed. (For example, when the vehicle speed is high, the intermittent operation speed will be faster.)

② Low — continuous low speed operation

③ High — continuous high speed operation

If the power switch is placed in the OFF position while the wiper operates in the high speed position, the wiper will not operate the next time the power switch is placed in the ON position. To operate the wiper, move the lever to any position other than high speed.

Push the lever up ④ to have one sweep operation of the wiper.

Pull the lever toward you ⑤ to operate the washer. Then the wiper will also operate several times.

Wiper drip wipe system:

The wiper will also operate once about 3 seconds after the washer and wiper are operated. This operation is to wipe washer fluid that has dripped on the windshield.

Wiper rise up:

1. Place the windshield wiper and washer lever into the OFF position.
2. Rapidly lift the windshield wiper and washer lever upwards twice within 0.5 seconds. This action will cause the wipers to automatically take the service position.

This function is used for the wiper blade replacement. See "Windshield wiper blades" (P.520).

NOTE:
The Speed Dependent feature may be disabled. For additional information, refer to "Vehicle Settings" (P.175).

⚠ CAUTION

Do not operate the windshield wiper while the wiper arm is pulled up. The wiper arm may be damaged.

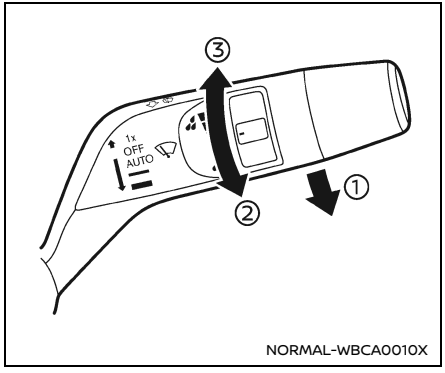

RAIN-SENSING AUTO WIPER SYSTEM (if so equipped)

The rain-sensing auto wiper system can automatically turn on the wipers and adjust the wiper speed depending on the rainfall and the vehicle speed by using the rain sensor located on the upper part of the windshield.

To set the rain-sensing auto wiper system, push the lever down to the "AUTO" position ①. The wiper will sweep once while the power switch is in the "ON" position.

The rain sensor sensitivity level can be adjusted by turning the knob toward ② (Low) or ③ (High).

- High — High sensitive operation
- Low — Low sensitive operation

To turn the rain-sensing auto wiper system off, push up the lever to the "OFF" position, or pull down the lever to the other.

⚠ CAUTION

Do not touch the rain sensor and around it when the wiper switch is in the "AUTO" position and the power switch is in the "ON" position. The wipers may operate unexpectedly and cause an injury or may damage a wiper.

- **The rain-sensing auto wipers are intended for use during rain. If the switch is left in the "AUTO" position, the wipers may operate unexpectedly when dirt, fingerprints, oil film or insects are stuck on or around the sensor. The wipers may also operate when exhaust gas or moisture affect the rain sensor.**
- **When the windshield glass is coated with water repellent, the speed of the rain-sensing auto wipers may be higher even though the amount of the rainfall is small.**
- **Be sure to turn off the rain-sensing auto wiper system when you use a car wash.**
- **The rain-sensing auto wipers may not operate if rain does not hit the rain sensor even if it is raining.**
- **Using genuine wiper blades is recommended for proper operation of the rain-sensing auto wiper system. (See "Windshield wiper blades" (P.520) for wiper blade replacement.)**

REAR WINDOW AND OUTSIDE MIRROR (if so equipped) DEFROSTER SWITCH

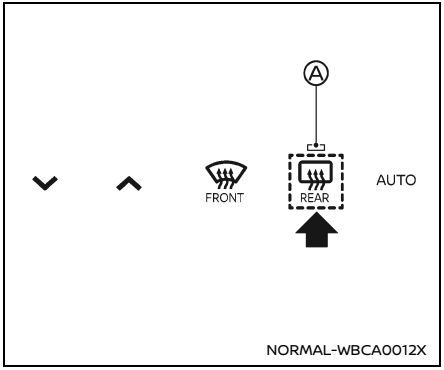

To defog/defrost the rear window glass and outside mirrors, start the EV system and push the switch on. The indicator light Ⓐ will illuminate. Push the switch again to turn the defroster off.

It will automatically turn off in approximately 20 minutes.

CAUTION

When operating the defroster continuously, be sure to start the EV system. Otherwise, it may cause the 12-volt battery to discharge.

When cleaning the inner side of the rear window, be careful not to scratch or damage the rear window defroster.

WINDSHIELD DEICER SWITCH (if so equipped)

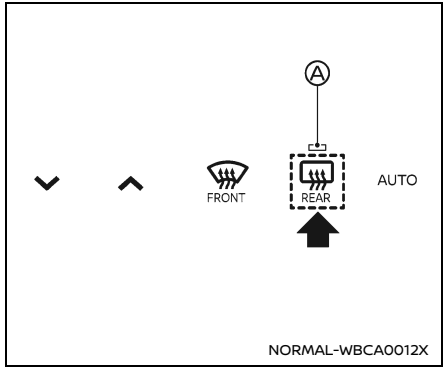

Example

The deicer is used to remove ice from the windshield when a wiper is frozen to the windshield.

To defrost the windshield, start the EV system and push the switch. The indicator light Ⓐ illuminates and the deicer operates for approximately 20 minutes. The rear window defroster will activate at the same time. After the preset time has passed, the deicer will turn off automatically. To turn off the deicer manually, push the deicer switch again, and the indicator light turns off.

HEADLIGHT AND TURN SIGNAL SWITCH

CAUTION

- **When operating the deicer continuously, be sure to start the EV system. Otherwise, it may cause the battery to discharge.**
- **When cleaning the inner side of the window, be careful not to scratch or damage the electrical conductors on the surface of the window.**

HEADLIGHT SWITCH

Basic information

CAUTION

Use the headlights with the EV system running to avoid discharging the vehicle battery.

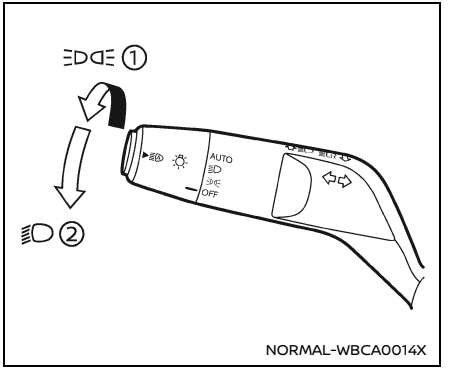

Example (type A)

Lighting

Type A (if so equipped):

① Rotate the switch to the position, and the front parking, tail, license plate, and instrument panel lights will come on.

② Rotate the switch to the position, and the headlights will come on and all the other lights remain on. The daytime running light will turn off.

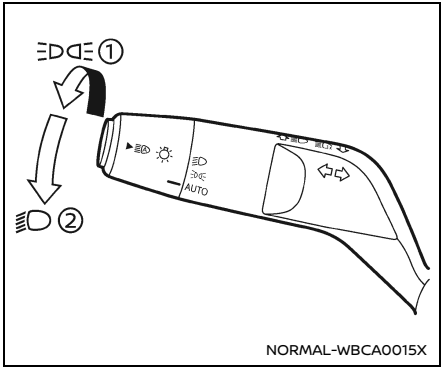

Example (type B)

Type B (if so equipped):

① Rotate the switch to the position, and the front parking, tail, license plate, and instrument panel lights will come on.

The Intelligent Auto Headlight system will also be set in this position.

② Rotate the switch to the position, and the headlights will come on and all the other lights remain on. The daytime running light will turn off.

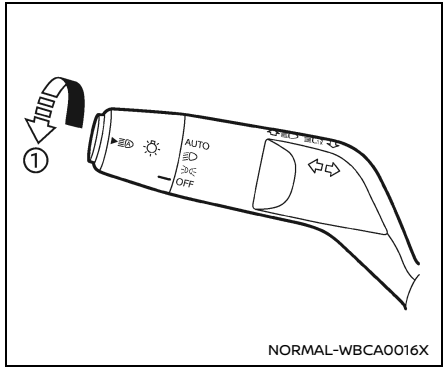

Example

Intelligent Auto Headlight system

Type A (if so equipped):

The Intelligent Auto Headlight system allows the headlights to be set so they turn on and off automatically.

To set the Intelligent Auto Headlight system:

1. Make sure the headlight switch is in the AUTO position ①.
2. Place the power switch in the ON position.
3. The Intelligent Auto Headlight system automatically turns the headlights on and off.

To turn the Intelligent Auto Headlight system off, turn the switch to the OFF, or position.

The Intelligent Auto Headlight system can turn on the headlights automatically when it is dark and turn off the headlights when it is light.

The headlights will also be turned on automatically at twilight or in rainy weather (when the windshield wiper is operated continuously).

If the power switch is placed in the OFF position and one of the doors is opened and this condition is continued, the headlights remain on for 5 minutes.

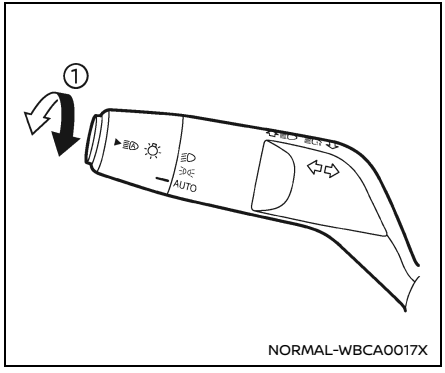

Example

Type B (if so equipped):

The Intelligent Auto Headlight system allows the headlights to be set so they turn on and off automatically.

To set the Intelligent Auto Headlight system:

1. Make sure the headlight switch is in the ≡D⊂≡ or AUTO position ①.
2. Place the power switch in the ON position.
3. The Intelligent Auto Headlight system automatically turns the headlights on and off.

To turn the Intelligent Auto Headlight system off, turn the switch to the ≡D position.

The Intelligent Auto Headlight system can turn on the headlights automatically when it is dark and turn off the headlights when it is light.

If the power switch is placed in the ON position when the parking brake is applied, the headlights remain off.

With the ≡D⊂≡ position selected, the headlights turn off when the power switch is placed in the OFF position, the shift position is placed in the P (Park) position or the parking brake is applied. (The front parking, tail, license plate, and instrument panel lights are on.)

The headlights will also be turned on automatically at twilight or in rainy weather (when the windshield wiper is operated continuously).

With the AUTO position selected (headlights are on), if the power switch is placed in the OFF position and one of the doors is opened and this condition is continued, the headlights remain on for 5 minutes.

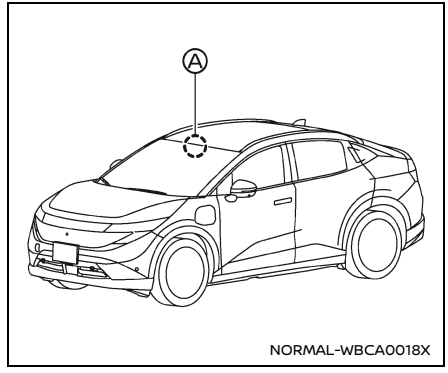

Type A (if so equipped)

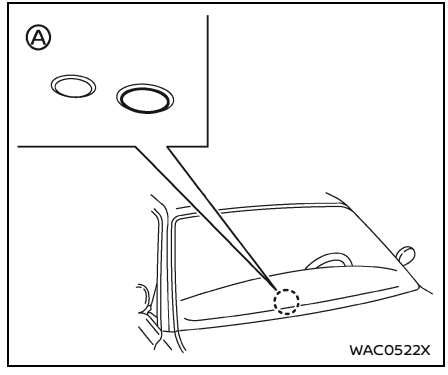

Type B (if so equipped)

Be sure not to put anything on top of the sensor Ⓐ located in front of the inside mirror (or located on the top of the instrument panel, depending on the models). The sensor controls the Intelligent Auto Headlight; if it is covered, the sensor reacts as if it is dark and the headlights will illuminate.

Automatic headlights off delay:

You can keep the headlights on for up to 180 seconds after you push the power switch to OFF and open any door then close all the doors. You can adjust the period of the automatic headlights off delay from 0 seconds (OFF) to 180 seconds. The factory default setting is 45 seconds.

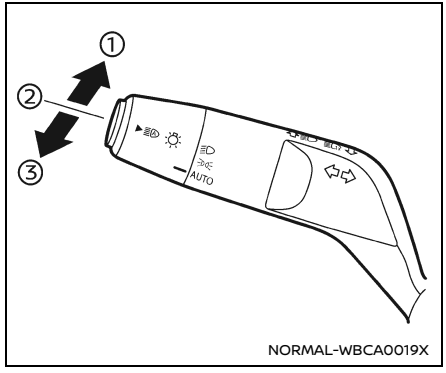

Example

Headlight beam select

① To select the high beam, push the lever forward and release it. The high beam lights come on and the light illuminates.

② Pull the lever back and release it to select the low beam.

③ To flash the headlights when the high beam is not selected, pull the lever towards the rear position. To flash the headlights when the high beam is selected, pull the lever twice towards the rear position.

High beam assist

Basic information:

The high beam assist system will operate when the vehicle is driven at speeds of approximately 19 MPH (30 km/h) and above. If an oncoming vehicle or leading vehicle appears in front of your vehicle when the headlight high beam is on, the headlight will be switched to the low beam automatically.

Precautions on high beam assist:

⚠ WARNING

- **The high beam assist system is a convenience but it is not a substitute for safe driving operation. The driver should remain alert at all times, ensure safe driving practices and switch the high beams and low beam manually when necessary.**
- **The high beam or low beam may not switch automatically under the following conditions. Switch the high beam and low beam manually.**
  - **During bad weather (rain, fog, snow, wind, etc.).**

- When a light source similar to a headlight or tail light is in the vicinity of the vehicle.
- When the headlights of the oncoming vehicle or the leading vehicle are turned off, when the color of the light is affected due to foreign materials on the lights, or when the light beam is out of position.
- When there is a sudden, continuous change in brightness.
- When driving on a road that passes over rolling hills, or a road that has level differences.
- When driving on a road with many curves.
- When a sign or mirror-like surface is reflecting intense light towards the front of the vehicle.
- When the container, etc. being towed by a leading vehicle is reflecting intense light.
- When a headlight on your vehicle is damaged or dirty.
- When the vehicle is leaning at an angle due to a punctured tire, being towed, etc.

- The timing of switching the low beam and high beam may change under the following situations.
  - The brightness of the headlights of the oncoming vehicle or leading vehicle.
  - The movement and direction of the oncoming vehicle and the leading vehicle.
  - When only one light on the oncoming vehicle or the leading vehicle is illuminated.
  - When the oncoming vehicle or the leading vehicle is a two-wheeled vehicle.
  - Road conditions (incline, curve, the road surface, etc.).
  - The number of passengers and the amount of cargo.

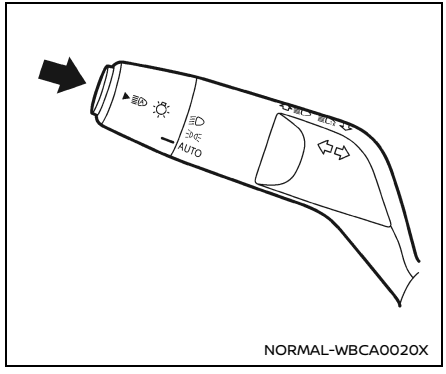

Example

High beam assist operations:

To activate the high beam assist system, push the switch as illustrated with the AUTO position (or position, depending on the model). The high beam assist indicator light in the meter will illuminate while the headlights are turned on.

If the high beam assist indicator light does not illuminate in the above condition, it may indicate that the system is not functioning properly. It is recommended you have the system checked by a NISSAN certified LEAF dealer.

When the vehicle speed lowers to less than approximately 13 MPH (20 km/h), the

headlight remains the low beam.

To turn off the high beam assist system, push the switch again.

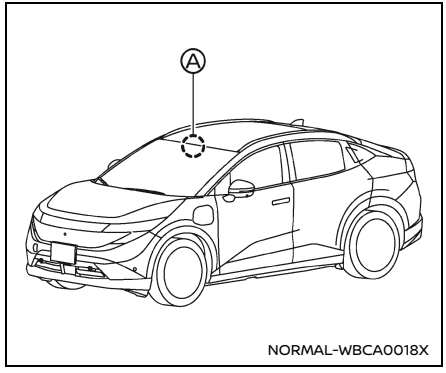

Ambient image sensor maintenance:

The ambient image sensor Ⓐ for the high beam assist system is located in front of the inside mirror. To keep the proper operation of the high beam assist system and prevent a system malfunction, be sure to observe the following:

- Always keep the windshield clean.
- Do not attach a sticker (including transparent material) or install an accessory near the ambient image sensor.
- Do not strike or damage the areas around the ambient image sensor. Do not touch the sensor lens that is located on the ambient image sensor.

If the ambient image sensor is damaged due to an accident, it is recommended you contact a NISSAN certified LEAF dealer.

Battery saver system

- When the headlight switch is in the ≡DC≡ or ≡D position while the power switch is in the ON position, the lights will automatically turn off within a period of time after the power switch has been placed in the OFF position.
- When the headlight switch remains in the ≡DC≡ or ≡D position after the lights automatically turn off, the lights will turn on when the power switch is placed in the ON position.

⚠ CAUTION

- **When you turn on the headlight switch again after the lights automatically turn off, the lights will not turn off automatically. Be sure to turn the light switch to the OFF (if so equipped) or AUTO position when you leave the vehicle for extended periods of time, otherwise the 12-volt battery will be discharged.**

- **Never leave the light switch on when the EV system is not running for extended periods of time even if the headlights turn off automatically.**

Daytime Running Light (DRL) system

The LED Daytime Running Lights (DRL) automatically illuminate when the EV system is started and the parking brake is released. The LED DRL operate with the headlight switch in the OFF (if so equipped), ≡D◁≡, or AUTO (when the headlights are off) position. When you turn the headlight switch to the ≡D position for full illumination, the LED lights switch from LED DRL to the park function.

Type A (if so equipped): If the parking brake is applied before the EV system is started, the LED DRL do not illuminate. The LED DRL illuminate when the parking brake is released. This feature will work in the ≡D◁≡, AUTO or OFF position. The LED DRL will remain on until the power switch is placed in the OFF position.

Type B (if so equipped): If the parking brake is applied before the EV system is started, the LED DRL do not illuminate. The LED DRL illuminate when the parking brake is released. This feature will work in the AUTO or ≡D◁≡ position. The LED DRL will remain on until the power switch is placed in the OFF position.

⚠ WARNING

When the LED DRL system is active with the headlight switch in the OFF position (if so equipped), tail lights on your vehicle are not on. It is necessary at dusk to turn on your headlights. Failure to do so could cause an accident injuring yourself and others.

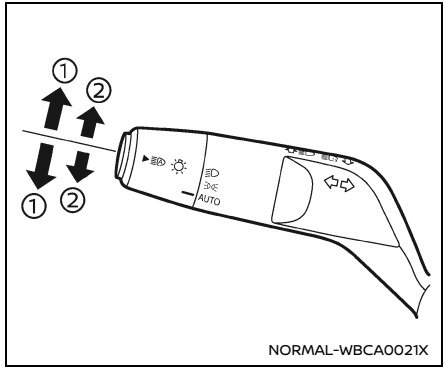

Example

TURN SIGNAL SWITCH

① Turn signal

Move the lever up or down to signal the turning direction. When the turn is completed, the turn signals cancel automatically.

② Lane change signal

Move the lever up or down until the turn signal begins to flash, but the lever does not latch, to signal a lane change. Hold the lever until the lane change is completed.

Move the lever up or down until the turn signal begins to flash, but the lever does

not latch, and release the lever. The turn signal will automatically flash three times.

Choose the appropriate method to signal a lane change based on road and traffic conditions.

EMBLEM LIGHT (if so equipped)

Regardless of headlight switch position, the emblem light illuminates when the power switch is in the ON position, the welcome light is activated, or the door is locked. The light turns off when the power switch is placed in the OFF position.

HORN

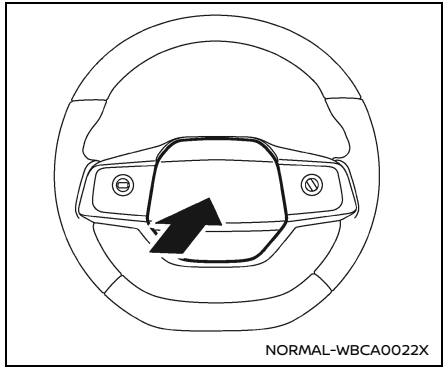

To sound the horn, push the center pad area of the steering wheel.

WARNING

Do not disassemble the horn. Doing so could affect proper operation of the supplemental front air bag system. Tampering with the supplemental front air bag system may result in serious personal injury.

HEATED STEERING WHEEL (if so equipped)

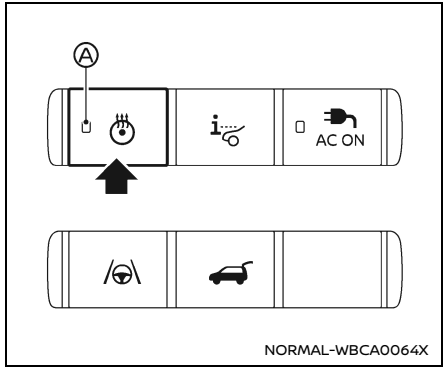

Heated steering wheel switch

OPERATION WITH SWITCH

The heated steering wheel switch is located on the instrument panel.

1. Start the EV system.
2. Push the heated steering wheel switch.

   ON: the indicator on the switch Ⓐ illuminates.

   OFF: the indicator on the switch turns off.

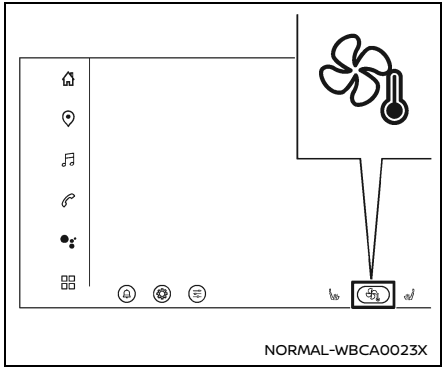

Example

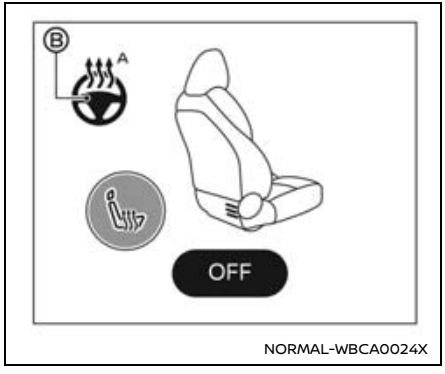

Example

OPERATION WITH TOUCH SCREEN DISPLAY

The control keys are displayed on the touch screen display.

1. Start the EV system.
2. To display the climate control screen, touch the key on the touch screen display.
3. Touch the key Ⓑ to select the mode.
   ① AUTO mode (orange)
   ② Manual mode (orange)
   ③ Off (gray)

If the surface temperature of the steering wheel is below 86 to 104°F (30 to 40°C), the system will heat the steering wheel and cycle off and on to maintain a temperature above 86 to 104°F (30 to 40°C). The indicator light will remain on as long as the system is on.

In the AUTO mode, the temperature control intensity level can be selected by the touch screen display. (See "Air conditioner settings" (P.322).)

The heated steering wheel system is automatically turned off after 30 minutes.

NOTE:

The heated steering wheel switch and the key on the touch screen display are synchronized.

When the switch is turned on, the key also turned on as the manual mode.

When the switch is turned off, the key turns off.

The Auto mode cannot be selected by the switch.

HEATED SEATS (if so equipped)

BASIC INFORMATION

WARNING

Do not use or allow occupants to use the seat heater if you or the occupants cannot monitor elevated seat temperatures or have an inability to feel pain in body parts that contact the seat. Use of the seat heater by such people could result in serious injury.

CAUTION

- **The 12-volt battery could run down if the seat heater is operated while the EV system is not running.**
- **Do not use the seat heater for extended periods or when no one is using the seat.**
- **Do not put anything on the seat which insulates heat, such as a blanket, cushion, seat cover, etc. Otherwise, the seat may become overheated.**
- **Do not place anything hard or heavy on the seat or pierce it with a pin or similar object. This may result in damage to the heater.**
- **Any liquid spilled on the heated seat should be removed immediately with a dry cloth.**
- **When cleaning the seat, never use gasoline, thinner, or any similar materials.**
- **If any malfunctions are found or the heated seat does not operate, turn the switch off and have the system checked. It is recommended you visit a NISSAN certified LEAF dealer for this service.**

NOTE:
The heated seats consume less power than the heater and can be used to either help extend driving range by reducing heater use or to maximize comfort by supplementing the heater.

The front and rear (if so equipped) seats are warmed by built-in heaters. The control keys are displayed on the touch screen display and the switches are located on the back of the center console box, and can be operated independently of each other.

The heater is controlled by a control module, automatically adjusting the heat level to maintain comfort according to the selected heat range.

The temperature control intensity level can be selected by the touch screen display. See "Air conditioner settings" (P.322).

When the vehicle's interior is warmed, or before you leave the vehicle, be sure to turn off the seat heater.

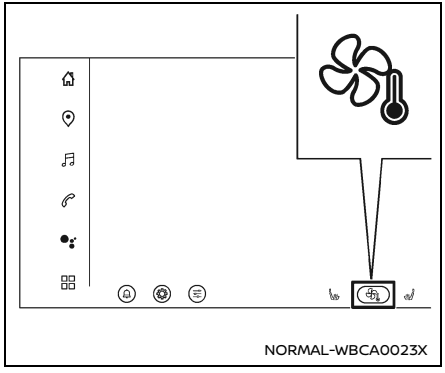

Example

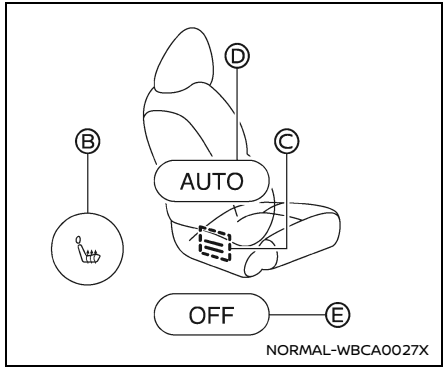

Example (front)

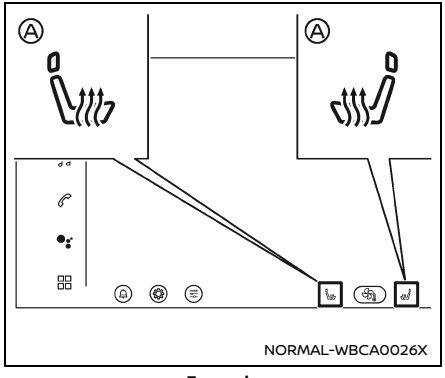

Example

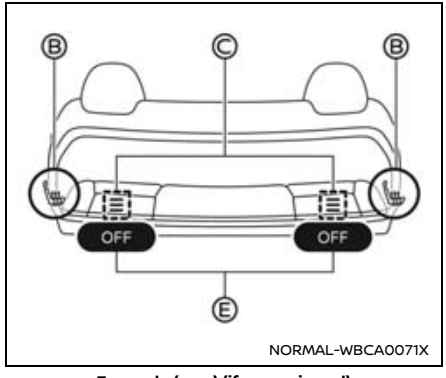

Example (rear) (if so equipped)

OPERATION WITH TOUCH SCREEN DISPLAY

1. Start the EV system.
2. To display the climate control screen, touch the key on the touch screen display.

   To select the rear seat (if so equipped), touch the "Rear Seats" key on the climate control screen.

   Alternatively, you can display the heated seat screen directly by touching the or key Ⓐ.
3. Touch the key Ⓑ to select the desired heat range.
   - For high heat, touch the key once.
   - For medium heat, touch the key twice.
   - For low heat, touch the key three times.
   - The indicator Ⓒ illuminates depending on the heat level.

   You can also select the AUTO mode by touching the “AUTO” key Ⓓ.

   For the AUTO mode, the temperature control intensity level can be adjusted. See "Air conditioner settings" (P.322).
4. To turn off the heater, touch the "OFF" key Ⓔ.

NOTE:
AUTO mode will be canceled when the heat range is operated manually.To select the AUTO mode again, touch the "AUTO" key.

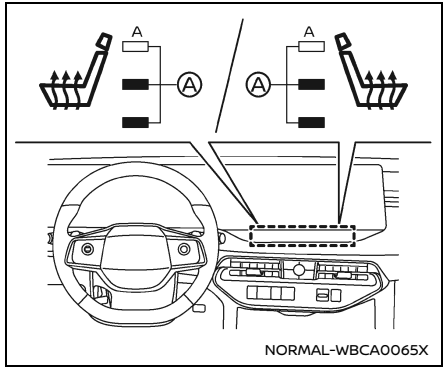

Front

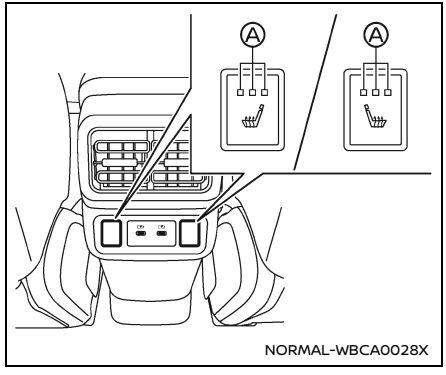

Rear (if so equipped)

OPERATION WITH SWITCH (if so equipped)

1. Start the EV system.
2. Push the heated seat switch and select the desired heat range.
   - For high heat, push the switch once.
   - For medium heat, push the switch twice.
   - For low heat, push the switch three times.
   - The indicator light Ⓐ will illuminate depending on the heat level when the heater is on.
3. To turn off the heater, push the heated seat switch until the indicator light turns off.

AC ON SWITCH (if so equipped)

See "Vehicle to Load (V2L) system (if so equipped)" (P.233).

STEERING ASSIST SWITCH

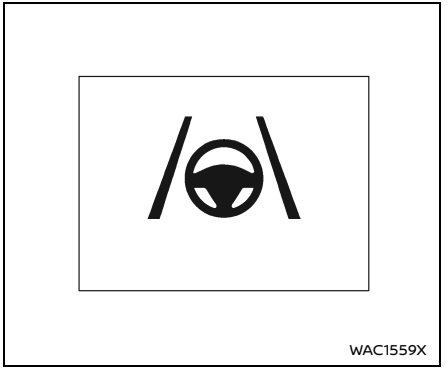

The Steering Assist switch is used to temporarily turn on and off the Steering Assist system.

You can also use the “Driver Assistance” menu in the vehicle information display to turn on and off the Steering Assist system. (See "Settings" (P.172).)

The Steering Assist system controls the steering system to help keep your vehicle near the center of the lane when driving. (See "ProPILOT Assist Systems" (P.409).)

REAR DOOR ALERT

The Rear Door Alert system functions under certain conditions to indicate there may be an object or passenger in the rear seat(s). Check the seat(s) before exiting the vehicle.

The Rear Door Alert system is initially enabled. The driver can disable the system using the vehicle information display. (See "Vehicle Settings" (P.175).)

When the system is enabled:

- The system is activated when a rear door is opened and closed.
- The time interval to activate the system between when the rear door is opened and the vehicle is started is about 15 minutes. A longer interval does not indicate a malfunction.

Type A (if so equipped):

When "Horn & Alert" setting is selected:

- When the driver stops the EV system, a notification message appears in the vehicle information display with the options to “Dismiss Message” or “Disable Alert” if desired.
  - Select “Disable Alert” to temporarily disable for that stop.
  - No selection or “Dismiss Message” will keep the alert enabled for that stop.

- If the alert is enabled when a driver exits the vehicle, a message will appear in the vehicle information display that states “Check Rear Seat”.
- An audible horn sound will occur after a short time unless a rear door is opened and closed within a short time to deactivate the alert.
- If the doors are locked before the alert is deactivated by opening a rear door, the horn will sound.
- If the liftgate is opened before a rear door is opened, the horn will be delayed until after the liftgate is closed.

NOTE:
If “Alert Only” setting is selected, the message alert will still be shown in the vehicle information display but the horn will not sound.

WARNING

The system does not directly detect objects or passengers in the rear seat(s). Instead, it can detect when a rear door is opened and closed, indicating that there may be something in the rear seat(s).

NOTE:
There may be times when the horn sounds but there are no objects or passengers in the rear seat(s).

(See "Check Rear Seat indicator" (P.192).)

Type B (if so equipped):

When "Rear Door Alert" setting is ON:

- When the driver stops the EV system, a notification message appears in the vehicle information display that states “Check Rear Seat".

WARNING

The system does not directly detect objects or passengers in the rear seat(s). Instead, it can detect when a rear door is opened and closed, indicating that there may be something in the rear seat(s).

POWER OUTLETS

BASIC INFORMATION

For the power outlet (plug type) (if so equipped) located on the back of the center console and the cargo area, see "Vehicle to Load (V2L) system (if so equipped)" (P.233).

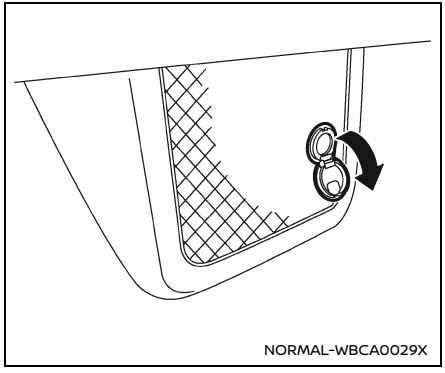

The power outlet is located on the center footwell area of the instrument panel.

⚠ CAUTION

- **The outlet and plug may be hot during or immediately after use.**
- **Do not use with accessories that exceed a 12 volt, 120W (10A) power draw. Do not use double adapters or more than one electrical accessory.**
- **Use power outlet with the power switch in the ON or READY to drive position to avoid discharging the 12–volt battery.**
- **Avoid using power outlet when the air conditioner, headlights or rear window defroster is on.**
- **This power outlet is not designed for use with a cigarette lighter unit.**
- **Push the plug in as far as it will go. If good contact is not made, the plug may overheat.**
- **Before inserting or disconnecting a plug, be sure the electrical accessory being used is turned OFF.**
- **When not in use, be sure to close the cap. Do not allow water or any liquid to contact the outlet.**

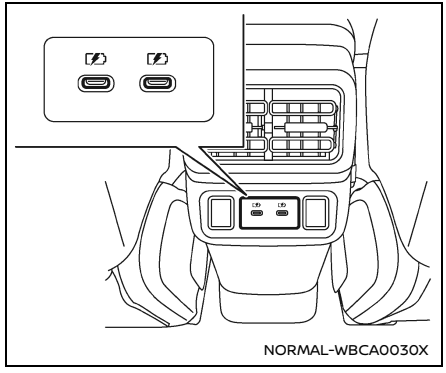

USB (Universal Serial Bus) charging connector (if so equipped)

The USB charging connector is located on the back of the center console box.

The USB charging connector can be used only for charging an external device.

Connect a USB device into the connector. Charging will start automatically.

The external device will be charged continuously while the power switch is in the ON position.

Some mobile devices cannot be charged depending on their specifications.

NOTE:
For best results, it is recommended to use the manufacturer cables, which are sold separately.

⚠ CAUTION

- **Do not force a USB device into the connector. Inserting the USB device tilted into the connector may damage the connector. Make sure that the USB device is connected correctly into the connector.**

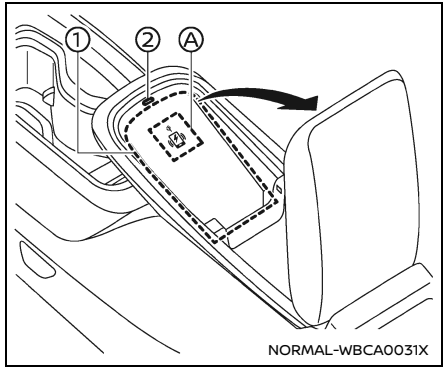

① Charging pad
② Indicator

WIRELESS CHARGER (if so equipped)

The wireless charger is located in the center console box. Pull up the armrest and place the smartphone on the pad of the wireless charger. Charging will start automatically. The smartphone will be charged continuously while the power switch is in the ON position.

⚠ WARNING

- **Never put metallic materials such as coins between the wireless charger and a smartphone.**
- **Those who use an implantable pacemaker or other medical equipment should contact the electric medical equipment manufacturer for the possible influences before use.**
- **Never put cloth over the smartphone during charging process.**
- **Never charge a smartphone when it is wet.**
- **While charging, never put metallic materials or small goods such as a cigarette lighter, Intelligent Key or memory drive between the wireless charger and a smartphone.**
- **When parking, be careful with cigarette lighters and other items. Do not leave a cigarette lighter with exposed controls on the wireless charger, in a glove box or other small container, or drop it on the floor or in a crevice in the seat. Gas may be spurted out when you push down the armrest or move the seat, which may cause a fire. Also, storing a cigarette lighter immediately after use may cause a fire.**

⚠ CAUTION

- **Do not put an RFID/NFC/credit card between the wireless charger and a smartphone. This could cause data corruption in the card.**
- **Do not use the wireless charger with dust accumulated or dirt on the pad.**
- **Do not hit the surface of the wireless charger.**
- **Do not spill liquid (water, drinks, etc.) on the charging pad.**
- **Do not use grease, oil or alcohol for cleaning charging pad.**

Wireless charger Indicator

The indicator ② will illuminate in orange when the charging process is started.

When the charging has completed, the indicator illuminates in green.

If a malfunction occurs or the charging process has stopped, the indicator will blink in orange for 8 seconds then turn off.

Operation of the wireless charger

To use the wireless charger, it is necessary to properly position the smartphone on the charging pad with the screen facing up. To maximize charging performance, ensure the smartphone is fully seated on the center of the charging pad over the "Qi" logo Ⓐ. Because the location of the power receiver may vary depending on the smartphone, you will need to try and find the area that suits your smartphone.

Remove the smartphone case or accessories before charging, as they may affect charging capability.

NOTE:

- **Only a Qi compatible smartphone can be used.**
- **The charging may not be possible depending on the smartphone type. Please refer to your smartphone's instruction manual for details.**
- **Smartphones that are too large to be placed on the charging pad cannot be charged.**
- **Smartphones that are smaller than 5.5 x 2.7 in (139 x 69 mm) may not be charged. If a smartphone smaller than the above size is placed in a corner and cannot be charged, reposition the smartphone to the center of the charging pad.**
- **Never put a magnetic card between the charging pad and a smartphone. Also, never put a credit card, magnetic recording medium, etc. near the charging pad. The recorded data may be damaged.**
- **The charging pad can be used as a storage space while a Qi compatible smartphone is not placed.**
- **If the smartphone moves out of the charging pad, place the smartphone back on the [Qi] logo.**
- **Turn off the vibration function of the smartphone before wireless charging.**
- **If you charge your smartphone while using apps or immediately after using apps, the smartphone or the wireless charger may be warmed during charging process and the charging may stop by the protection function of the smartphone or the wireless charger. This is not a malfunction. If this occurs, restart charging after the smartphone or the wireless charger cooled down.**

  The indicator will blink in orange then turn off.
- **The wireless charging process may be stopped by the status of the smartphone (battery temperature, etc.).**
- **If a radio noise interference occurs during charging process, put the smartphone onto the center**

(logo) position of the wireless charger again.

- **The wireless charging process will stop during process of searching the Intelligent Key.**
- **The wireless charging process will not be started when a USB (Universal Serial Bus) cable is connected to the smartphone. The indicator may illuminate in orange or blink if the smartphone is put on the wireless charger with a USB cable connected.**

  However, charging is not performed.
- **Depending on the type of the smartphone, the indicator may remain illuminated in orange even when the charging process has been completed.**
- **When putting only metallic materials or key (Intelligent Key) on the charging pad, the indicator may illuminate for a short period of time. The wireless charging process is not operated.**

FCC Notice:

For USA:

This device complies with Part 15 of the FCC Rules. Operation is subject to the following two conditions: (1) this device may not cause harmful interference, and (2) this device must accept any interference received, including interference that may cause undesired operation.

NOTE:

Changes or modifications not expressly approved by the party responsible for compliance could void the user's authority to operate the equipment.

For Canada:

This device contains licence-exempt transmitter(s)/receiver(s) that comply with Innovation, Science and Economic Development Canada's licence-exempt RSS(s). Operation is subject to the following two conditions: (1) This device may not cause interference. (2) This device must accept any interference, including interference that may cause undesired operation of the device.

VEHICLE TO LOAD (V2L) SYSTEM (if so equipped)

BASIC INFORMATION

Using the power of the Li-ion battery, the V2L can be used to power electric appliances such as home appliances or camping equipments.

There are two options for the V2L system: V2L inside and V2L outside.

V2L inside has two power outlets inside the vehicle. See "How to use the V2L inside (if so equipped)" (P.237).

V2L outside uses the Vehicle Load Connector (VLC) connected to the normal charge port. See "How to use the V2L outside (if so equipped)" (P.239).

The V2L inside can be used as a power supply for 120 volt, maximum load 1500 W (total for 2 outlets).

The V2L outside can be used as a power supply for 120 volt, maximum load 1800 W.

WARNING

- **Observe the warnings and precautions in the user's manuals of the electric appliances. There is a risk of fire, electric shock, injury or burn.**

- **Do not use damaged appliances and power plugs, or appliances that are flooded or likely to be submerged. There is a risk of fire, electric shock, injury or burn.**
- **When using an electric appliance with a ground wire, plug it into an outlet equipped with a ground terminal and connect the ground wire to the ground terminal. If the plug shape of the electric appliance used does not match the plug shape of the outlet on the vehicle side, connect the ground wire using a commercially available conversion adapter.**
- **When using the V2L system while the vehicle is parked, be sure to shift the P (Park) position and apply the parking brake to prevent unintended vehicle start. (V2L inside)**
- **While driving, properly secure the electric appliances. Do not drive with cooking equipments such as pots and pans with their contents inside. Sudden stop or shaking of the vehicle body may cause them to pop out. (V2L inside)**

⚠ CAUTION

- **Do not allow children to touch the V2L system power outlet.**
- **Do not use electric appliances that generate steam in the passenger compartment. Fog may form inside the windows and obstruct your view when driving. (V2L inside)**

NOTE:

- **If you use a long extension power cable or power cable reel, the electric appliance may not function properly.**
- **For V2L inside, use electric appliance(s) with a maximum load of 1500 W (total of 2 outlets) or less. Electric appliances exceeding 1500 W may activate the protection function of the V2L system and the V2L system becomes unusable.**

  For V2L outside, use electric appliance with a maximum load of 1800 W or less. Electric appliances exceeding 1800 W may activate the protection function of the V2L system and the V2L system becomes unusable.
- **The following electric appliances may not operate properly at maximum loads of 1500 W (for V2L inside)/1800 W (for V2L outside) or less:**
  - **Electric appliances that generate large temporary currents**
  - **Electric appliances that measures data**
  - **Electric appliances that requiring stable power supply**
- **Even if the V2L inside and V2L outside are used at the same time, the maximum load of both V2L inside (1500 W in total) and V2L outside (1800 W) will not change.**
- **When using an electric appliance at the maximum load of 1500 W (for V2L inside)/1800 W (for V2L outside) continuously, the electric appliance may not operate properly. The maximum load may vary depending on the condition of the Li-ion battery.**
- **The V2L system may not work when the temperature of the Li-ion battery is low.**
- **Depending on the connected electric appliance, you may not be able to listen to the radio.**
- **Using V2L system while your vehicle is charging may increase the charging time.**
- **If the temperature inside the vehicle is high, you may not be able to use**

the power outlet. Park the vehicle in a well-ventilated, shady area and open the windows and doors to ventilate the vehicle until the temperature inside lowers, or turn on the air conditioner. (V2L inside)

- **The power consumption of the Li-ion battery increases when the V2L system is used while driving, so the actual driving range may be shorter than the range displayed on the meter. (V2L inside)**
- **The cooling fan sound may be heard when the V2L system is used. This is normal. (V2L inside)**
- **Noise may be heard when the V2L system is turned ON/OFF. This is normal. (V2L inside)**

HOW TO USE THE V2L SYSTEM

Basic information

WARNING

- **Do not connect the V2L power source to a power outlet or switchboard in the house and use it as a power source.**
- **Never plug in or unplug the power cord with wet hands. There is a risk of electric shock. (V2L inside)**
- **Do not splash water on the power outlet. There is a risk of electric shock. (V2L inside)**
- **Do not plug sharp metal objects (pins, wires, etc.) into the power outlet. There is a risk of electric shock. (V2L inside)**
- **Do not disassemble, repair or modify the V2L system components. There is a risk of electric shock. (V2L inside)**
- **When you are using electric appliances outside your car, stop using them and unplug them from the power outlet as soon as it thunders. There is a risk of electric shock or fire. (V2L inside)**

CAUTION

- **Do not leave the vehicle when using the V2L system.**
- **When turning on the V2L system, make sure that the power supply of the connected electric appliance is turned off.**

  If the power of the appliance is on, electric appliances may suddenly start operating.
- **Do not charge electric vehicles or plug-in hybrid vehicles using the V2L system.**
- **Insert the plug of an electric appliance to be connected to the root of an outlet.**
- **If you feel that the plug of an electric appliance is loose when you plug it into the power outlet, it is recommended to contact your NISSAN certified LEAF dealer.**
- **Only one electric appliance can be connected to each outlet.**
- **Do not plug the AC adapter directly into the power outlet.**

  Depending on the weight of the AC adapter, the plug may come off and heat may be generated.
- **If the appliance does not have a power switch, first, plug the appliance to the power outlet and then turn on the V2L system.**
- **Damage to the device or loss of data (from laptops or external drives) due to a sudden power outage is not covered by the warranty.**

- **Damage to the vehicle caused by external devices connected to power outlets is not covered by the warranty.**
- **Use only electric appliances that conform to UL standards.**
- **The power outlet or the plug of the device may become hot. Please be careful when removing devices.**
- **Do not connect an external power supply (from solar panels, external batteries, etc.) to the power outlet.**
- **When using electric appliances inside the vehicle, keep them in a stable place to prevent them from falling or falling. There is a risk of injury. (V2L inside)**
- **When using electric appliances outside the vehicle with the V2L system, be careful not to pinch the power code in doors or windows. (V2L inside)**
- **When not using the V2L system, close the outlet lid. (V2L inside)**
- **Do not use the V2L system when the EV system warning light is illuminated. See "EV system warning light" (P.165). (V2L inside)**
- **If dust or dirt accumulates in the power outlet, it may cause a short circuit. (V2L inside)**

NOTE:

- **The V2L system cannot be used when the Li-ion battery level is below the preset minimum battery level.**
- **The V2L inside cannot be turned on when the vehicle power switch is not in the ON or READY to drive position.**

  The V2L outside cannot be turned on when the vehicle power switch is not in the ON or OFF position.
- **Some appliances with high rated power consumption (hot plate, etc.) require the use of a single outlet. In such cases, do not use other outlet together with other electric appliances. (V2L inside)**

  If you use more than one electric appliance, the electric appliances may not function properly depending on the combination of the appliances. (V2L inside)
- **To save the standby power consumption, it is recommended to turn off the AC ON switch if the V2L system is not in use. (V2L inside)**
- **Do not use the electric appliances inside the vehicle, as there is a risk of damage to the appliances caused by the vibration during driving or the temperature inside the vehicle under the blazing sun. (V2L inside)**
- **Do not use electric appliances that require horizontal installation inside the vehicle as they may not function properly. (V2L inside)**
- **Do not use electric appliances in dusty areas, areas exposed to direct sunlight, in areas exposed to rain or water (except for waterproof appliances). (V2L inside)**

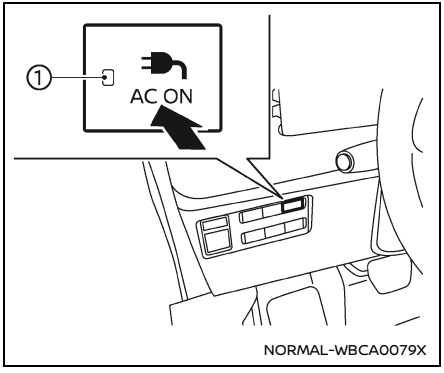

AC ON switch

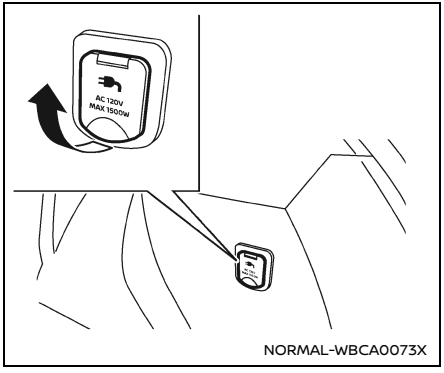

Cargo area

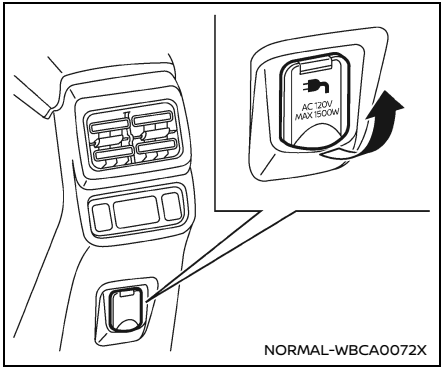

Back of the center console

How to use the V2L inside (if so equipped)

The power outlets of the V2L inside is located on the back of the center console and the right side of the cargo area.

1. Start the EV system (READY to drive position) or place the vehicle power switch ON.
2. Open the lid of the power outlet and plug the power cord of the appliance into the power outlet.
3. Turn on the AC ON switch.
4. Turn on the switch of the electric appliance.

   When the AC ON switch is turned on, the indicator light ① on the switch will illuminate.

   When the power supply is started, the charging status indicator light blinks.

   See "Charging status indicator light" (P.75) for more details.
5. To turn off the V2L system, push the AC ON switch again.

   Close the lid of the power outlet after use.

NOTE:

- **When the AC ON switch is turned on, the 120 V AC power is supplied to the power outlet. Pay attention to the operation of electric appliances that cannot be switched on/off.**
- **If the vehicle power switch is turned off while the V2L system is in use, the V2L system remains operational.**

  However, when the vehicle power switch is turned off after driving, the V2L system is turned off to prevent the driver from forgetting to turn it off. When the vehicle is restarted, the V2L system will not turn on automatically.

To turn the V2L system back on, restart the vehicle and then push the AC ON switch.

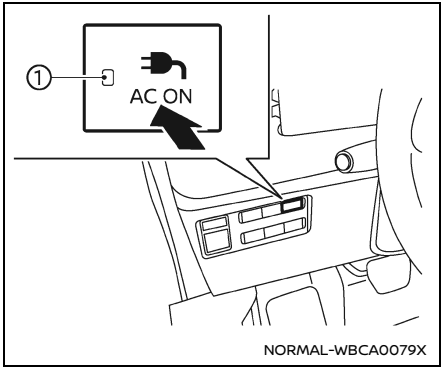

AC ON switch

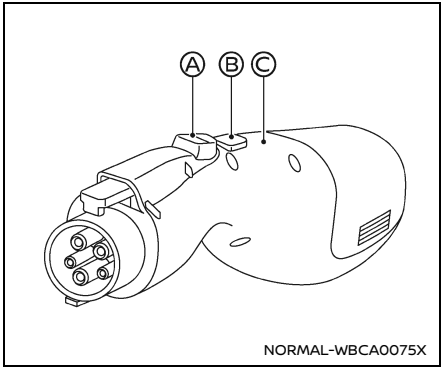

Vehicle Load Connector (VLC) (front view)

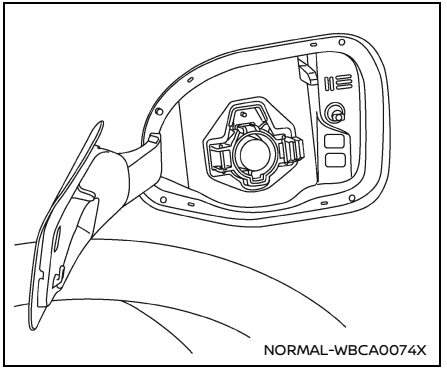

Normal charge port

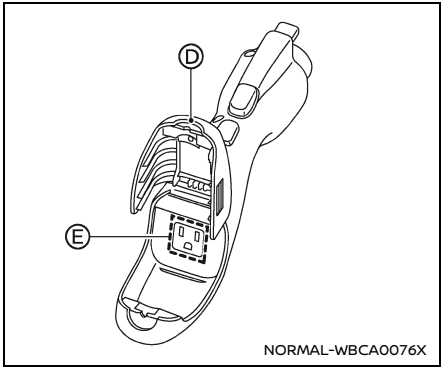

Vehicle Load Connector (VLC) (back view)

Ⓐ Latch button
Ⓑ V2L button
Ⓒ LED indicator
Ⓓ Power outlet cover
Ⓔ Power outlet

How to use the V2L outside (if so equipped)

To use V2L outside, connect the Vehicle Load Connector (VLC) to the J1772 Normal charge port (on the left side of the vehicle).

The J3400 DC Fast Charge port (on the right side of the vehicle) cannot be used for the V2L outside.

1. Make sure the vehicle power switch is turned OFF, or in the ON position. (Not in the READY to drive position.)
2. Connect the VLC to the normal charge port.
3. Open the power outlet cover Ⓓ of the VLC and plug the power cord of an appliance into the power outlet Ⓔ. Then close the power outlet cover.
4. Push the V2L button Ⓑ twice consecutively within 3 seconds. The charging status indicator light blinks and the VSP sounds twice when the V2L is activated.

   See "Charging status indicator light" (P.75) and "Approaching Vehicle Sound for Pedestrians (VSP) system" (P.35).

   When the power supply is started, the LED indicator Ⓒ on the VLC will illuminate.
5. Turn on the switch of the electric appliance.
6. To turn off the VLC, push the V2L button Ⓑ for longer than 1 second. The VSP sounds twice when the V2L is deactivated. Then push the latch button Ⓐ to disconnect the VLC from the normal charge port.

   Alternatively, you can turn off the V2L by pushing the latch button Ⓐ directly to disconnect the VLC from the normal charge port.

   If the normal charge port is in the LOCK mode, turn the charge port to the UNLOCK mode. See "Unlock operation" (P.66).

   Unplug the power cord of the appliance, and close the power outlet cover of the VLC.

⚠ WARNING

- **Never disassemble, repair, modify, or paint the VLC. It is recommended you visit a NISSAN certified LEAF dealer if the VLC is damaged.**
- **Do not subject the VLC to strong shocks or drops.**
- **Do not wash the VLC with water, or soak it in water or other liquids. Do not use the VLC if the product is soaked in water or other liquids. If water enters inside, fire or electric shock may occur during use that could result in serious injury or death.**
- **Do not attach stickers, etc. on the VLC.**
- **Keep the VLC out of the reach of children.**
- **Prevent dust or other dirt from adhering to the VLC. If it gets dirty, wipe off the dirt with a firmly squeezed cloth and wipe off with a dry cloth.**
- **Do not connect the VLC to incompatible vehicles.**

  Also, do not connect any non-genuine VLC to the vehicle.

- **Do not use solvents such as gasoline, acid or alkaline solvents on the VLC.**
- **Do not insert sharp metal objects (pins, wires, etc.) into the VLC.**
- **Even in fine weather, please use the VLC with the waterproof cover firmly closed.**
- **Do not wipe with a cloth while using the V2L function.**

⚠ CAUTION

When not in use, store the VLC in a place that is away from moisture and direct sunlight.

NOTE:
- **When the LED indicator of the VLC is illuminated, the 120 V AC power is supplied to the power outlet. Pay attention to the operation of electric appliances that cannot be switched on/off.**
- **If the vehicle power switch is turned off while the V2L system is in use, the V2L system remains operational.**

USABLE RANGE OF THE V2L SYSTEM

Basic information

The usable minimum Li-ion battery limit for the V2L system can be set.

When the Li-ion battery level approaches the preset minimum battery limit, a pop-up message will appear on the vehicle information display for the notification.

When the minimum battery level is reached, the V2L system stops and a pop-up message appears.

For details of how to set the minimum battery level for the V2L system, see "How to set minimum battery level" (P.240).

How to set minimum battery level

Perform the following steps to set the usable range (minimum battery level) of the V2L system.

1. Using the steering-wheel-mounted control, push the ◀ ▶ button until “Settings” appears in the vehicle information display and then push the scroll dial. Use the scroll dial to select “EV Settings”. Then push the scroll dial.
2. Select “V2L Power Outlet” and push the scroll dial.
3. Select "Min. Battery Level" and push the scroll dial.
4. Select the minimum Li-ion battery level (10 - 95%) and push the scroll dial to set the minimum battery level.

V2L usable limit indicators

See "V2L Power Outlets will be stopped soon, Min. battery level is almost reached indicator (if so equipped)" (P.192) and "V2L Power Outlets stopped Min. battery level was reached indicator (if so equipped)" (P.193).

TROUBLESHOOTING

Symptom:

The V2L system cannot be turned on.

Possible cause:
- The Li-ion battery level is below the preset minimum battery level.
- The vehicle power switch is not in the ON or OFF position (V2L outside).
- The vehicle power switch is not in the ON or READY to drive position (V2L inside).
- The temperature inside the vehicle is high. (V2L inside)

The message will be displayed in the vehicle information display. See "V2L Power Outlets are unavailable warning (if so equipped)" (P.193).

Action to take:

- Reset the minimum battery level.
- Turn the power switch in the ON or OFF position (V2L outside) or the ON or READY to drive position (V2L inside).
- Lower the temperature inside the vehicle (for example, by parking the vehicle in a place out of direct sunlight and ventilating the vehicle).

Symptom:

The appliances connected cannot be used.

Possible cause:

- The maximum load of the connected appliance(s) exceeds 1500 W in total (for V2L inside)/1800 W (for V2L outside).
- The connected appliance is running with a large temporary currents.
- The plug shape of the connected appliance is deformed or bent.
- The connected appliance is damaged.

Action to take:

- Use appliance(s) within the maximum load.
- Use appliance(s) that is not running with a large temporary currents.
- Use appliance(s) with a plug that is not deformed or bent.
- Use appliance(s) that are not damaged.

For the V2L outside, please also see the following.

- If the DC Fast Charge connector has been connected to the DC Fast Charge port, the V2L outside cannot be used.
- If power supply stops due to the rated output has been exceeded, set the connected appliances to within the rated output, disconnect the VLC, then reconnect it and restart the VLC. See "How to use the V2L outside (if so equipped)" (P.239).
- If "V2L Power Outlets stopped due to electrical error Check owners manual" warning is displayed, stop the operation and have the vehicle and the VLC checked. It is recommended to visit a NISSAN certified LEAF dealer for this service.
- If the charging status indicator light flashes in green but the LED indicator on the VLC has not been illuminated, there may be a malfunction in the VLC. See "Charging status indicator light" (P.75).

  Stop the operation and have the vehicle and the VLC checked. It is recommended to visit a NISSAN certified LEAF dealer for this service.

EMERGENCY SUPPORT

Basic information

NissanConnect® Services provide various services to support dealing with emergencies of the subscribed vehicle and the driver.

For example, in case of an illness or serious injury, you can seek support by pushing the in-vehicle Emergency Call (SOS) button and connecting to the NissanConnect® Services Response Center. The NissanConnect® Services Response Center can specify the location of the vehicle via GNSS, and the information will be sent to the police or other agencies as needed.

For information about other NissanConnect® Services emergency support related services, contact the NissanConnect® Customer Support line at 1-855-426-6628 or refer to the NissanConnect® Services website www.nissanusa.com/connect (for U.S.) or www.nissan.ca/nissanconnect (English)/ www.nissan.ca/nissanconnect/fr (French) (for Canada).

WARNING

- **Please note that the Automatic Collision Notification service and Emergency Call function cannot be used in the following conditions:**
  - **Emergency functions and services will not be available without a paid subscription to NissanConnect® Services.**
  - **The NissanConnect® Services network system is disabled.**
  - **The vehicle moves outside the service area where the TCU (Telematics Control Unit) is connected to the system.**
  - **The vehicle is outside the area where the cellular network service is receivable.**
  - **The vehicle is in a location with poor signal reception such as tunnels, underground parking garages, behind buildings or in mountainous areas.**
  - **The line is busy.**
  - **The TCU (Telematics Control Unit) or other systems of your vehicle are not working properly.**
  - **It may not be possible to make an emergency call depending on the severity of a collision and/or emergency.**
- **Automatic Collision Notification triggers a connection from the vehicle to the NissanConnect® Services Emergency Response Center when the vehicle has been involved in a collision event and/or if the supplemental air bags have deployed.**
- **Park the vehicle in a safe location and set the parking brake before operating the Emergency Call (SOS) button.**
- **Only use this service in case of an emergency. There may be a penalty for inappropriate use of the service.**
- **Radio waves could adversely affect electric medical equipment. Individuals who use a pacemaker should contact the device manufacturer regarding any possible effects before using the system.**
- **The TCU (Telematics Control Unit) antenna is installed inside the upper central part of the instrument panel. An occupant should not get any closer to the antenna than specified by the pacemaker manufacturer. The radio waves from the TCU antenna may adversely affect the operation of the pacemaker while using the NissanConnect® Services.**
- **If the automatic emergency call has been triggered, it is recommended that you bring the vehicle to a NISSAN certified LEAF dealer. This is necessary because the automatic emergency call system needs to be reset to avoid any unintended emergency call being made.**

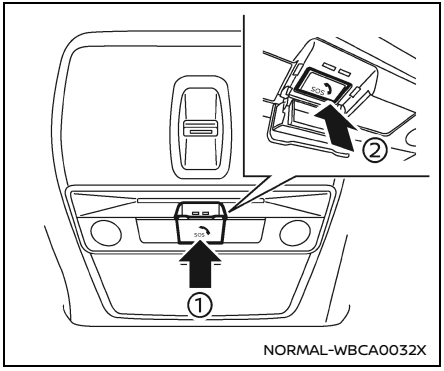

Making an emergency call

The Emergency Call (SOS) button is located near the map light.

1. Place the power switch in the ON position.
2. Pull down the cover ① to expose the Emergency Call (SOS) button ②.
3. Push the Emergency Call (SOS) button ② to make an emergency call.
4. When the line is connected, speak to the Response Specialist.

If you want to cancel the emergency call, push and hold the Emergency Call (SOS) button for a few seconds.

NOTE:

- **After the Emergency Call (SOS) button is pushed, it may take some time until the system initiates connection, depending on the technical environment and whether the TCU (Telematics Control Unit) is being used by other services.**
- **An indicator light on the Emergency Call (SOS) button shows the readiness of the emergency support system. If the indicator light is not illuminated, pushing the Emergency Call (SOS) button does not connect your vehicle to the Response Specialist.**

  The indicator light blinks while connected to the NissanConnect® Services Response Center.
- **Even when the indicator light is illuminated, connection to the NissanConnect® Services Response Center may not be possible. If this occurs in an emergency situation, contact the authorities by other means.**
- **To avoid disconnecting the line, keep the EV system running during an emergency call, if it is safe to do so.**

STORAGE

CUP HOLDERS

Basic information

⚠ CAUTION

- **Avoid abrupt starting and braking when the cup holder is being used to prevent spilling the drink. If the liquid is hot, it can scald you or your passenger.**
- **Use only soft cups in the cup holder. Hard objects can injure you in an accident.**

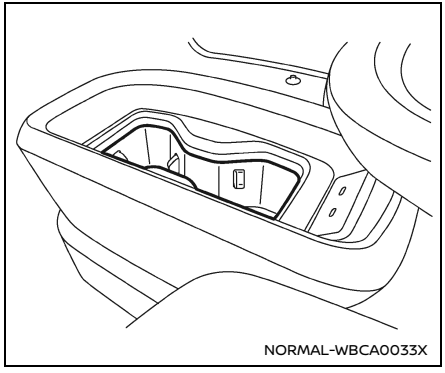

Front

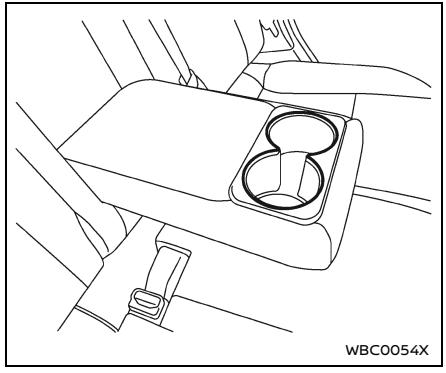

Rear (if so equipped)

The rear cup holders are located in the rear fold-down armrest.

SOFT BOTTLE HOLDERS

CAUTION

- **Do not use bottle holder for any other objects that could be thrown about in the vehicle and possibly injure people during sudden braking or an accident.**
- **Do not use bottle holder for open liquid containers.**

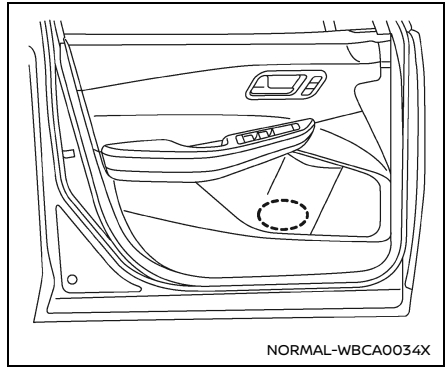

Door (front and rear)

ADJUSTABLE LUGGAGE FLOOR (if so equipped)

Basic information

You can use the luggage compartment in different ways using the adjustable luggage boards.

WARNING

Do not put objects heavier than 165 lbs (75 kg) on the load floor while in the upper position.

⚠ CAUTION

- **Do not push the front edge of the luggage board forcibly. Doing so may cause the luggage board to be tilted, resulting in personal injury.**
- **Do not handle the luggage board forcibly as this may deform it.**
- **While in the upper position, do not recline the seatbacks.**
- **Do not place cargo higher than the seatbacks. In a sudden stop or collision, unsecured cargo could cause personal injury.**

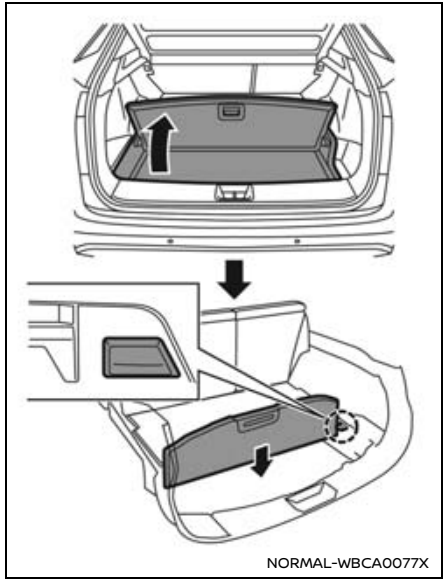

Vertical mode (if so equipped)

1. Pull the rear board upward to 90°.
2. Push down the board until it stops.

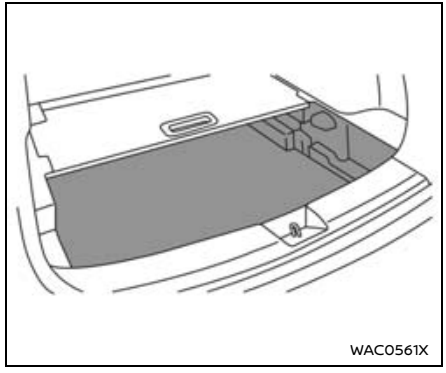

Luggage floor box (if so equipped)

To use the luggage floor box, pull off the rear board.

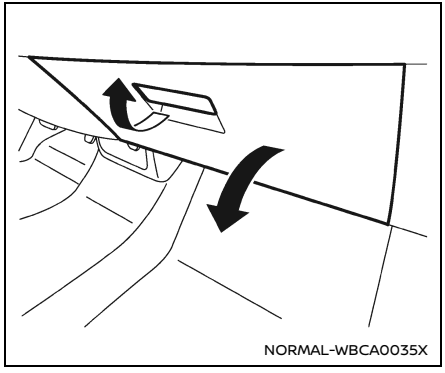

GLOVE BOX

WARNING

Keep glove box lid closed while driving to help prevent injury in an accident or a sudden stop.

To open the glove box, pull the handle.

To close, push the lid in until the lock latches.

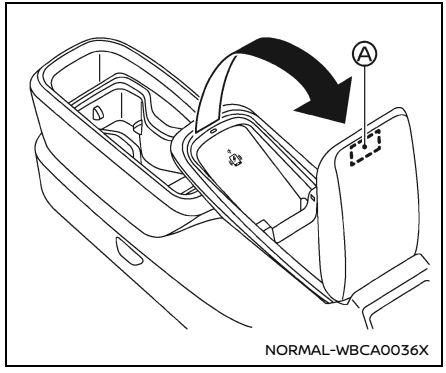

CONSOLE BOX

To open the console box lid, pull up the lid while pushing the button Ⓐ at the inside of the lid.

To close, push the lid down.

CENTER STORAGE

WARNING

Keep flexible center storage closed while driving to help prevent injury in an accident or a sudden stop.

CAUTION

Do not store a total load of more than 3.3 lb (1.5 kg).

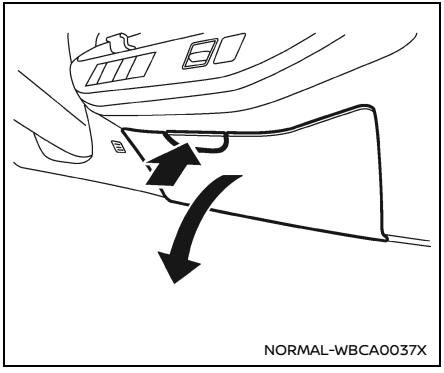

To open the flexible center storage, push the button.

To close, push the lid in until the lock latches.

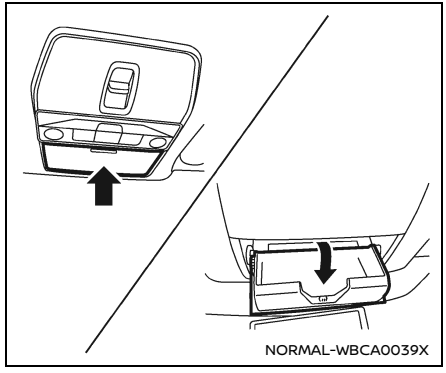

SUNGLASSES HOLDER (if so equipped)

WARNING

Keep the sunglasses holder closed while driving to avoid obstructing the driver's view and to help prevent an accident.

CAUTION

- **Do not use for anything other than sunglasses.**
- **Do not leave sunglasses in the sunglasses holder while parking in direct sunlight. The heat may damage the sunglasses.**

To open the sunglasses holder, push and release. Only store one pair of sunglasses in the holder.

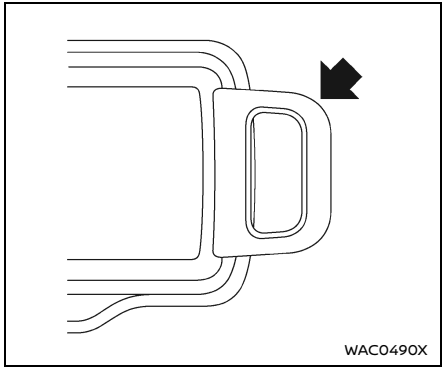

Sun visor

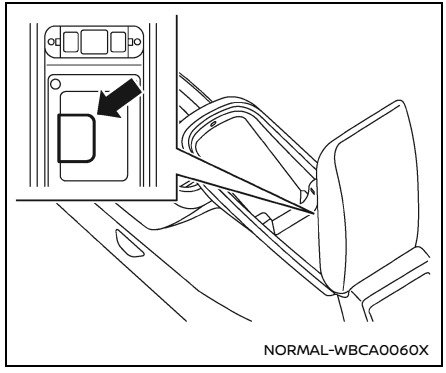

Console box lid

CARD HOLDER

Slide a card in the card holder.

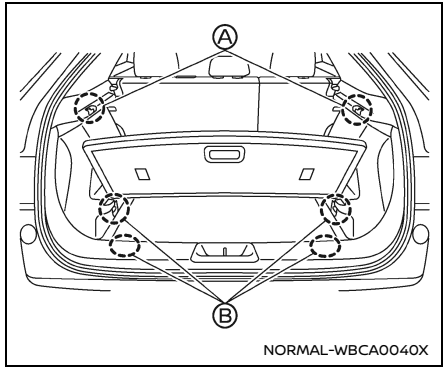

LUGGAGE HOOKS

The hooks Ⓐ are located on the luggage compartment as shown.

Hooks Ⓑ are located under the rear luggage board.

⚠ WARNING

- **Always make sure that the cargo is properly secured. Use the suitable ropes and hooks.**
- **Unsecured cargo can become dangerous in an accident or sudden stop.**

- **Do not apply a total load of more than 11 lbs. (5 kg) Ⓐ or 22 lbs. (10 kg) Ⓑ to a single hook when securing cargo.**

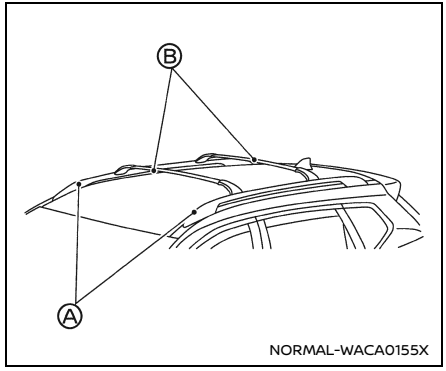

Example

ROOF RACK (if so equipped)

Basic information

WARNING

- **Always install the cross bars onto the roof side rails before loading cargo of any kind. Loading cargo directly onto the roof side rails or the vehicle's roof may cause vehicle damage.**
- **Roof rack cross bars should be evenly distributed.**
- **Do not exceed maximum roof rack crossbars load capacity and always distribute the load uniformly.**
- **Heavy loading of the roof rack has the potential to affect the vehicle stability and handling during sudden or unusual handling maneuvers.**
- **Properly secure all cargo with ropes or straps to help prevent it from sliding or shifting. In a sudden stop or collision, unsecured cargo could cause personal injury.**
- **Drive extra carefully when the vehicle is loaded at or near the cargo carrying capacity, especially if the significant portion of that load is carried on the crossbars.**

CAUTION

- **Use care when placing or removing items from the roof rack. If you cannot comfortably lift the items onto the roof rack from the ground, use a ladder or a stool.**

Do not apply any load directly to the roof

side rails Ⓐ. Cross bars Ⓑ (if so equipped) must be installed before applying load/cargo/luggage to the roof of the vehicle.

Genuine NISSAN accessory crossbars may be available through a NISSAN certified LEAF dealer. It is recommended that you visit a NISSAN certified LEAF dealer for additional information.

The service load capacity for the roof side rails is 163 lb (74 kg), however do not exceed the crossbars load capacity.

Be careful that your vehicle does not exceed the Gross Vehicle Weight Rating (GVWR) or its Gross Axle Weight Rating (GAWR front and rear).

For additional information regarding GVWR and GAWR, refer to "Vehicle loading information" (P.566).

- F.M.V.S.S. or C.M.V.S.S. certification label (located on the driver's door pillar).

Installing crossbars (if so equipped)

WARNING

- **It is recommended that you have the roof rack crossbars installed by a NISSAN certified LEAF dealer.**
- **Protect the painted area on the vehicle's roof under the crossbars by placing a piece of cloth under the cross bars to prevent scratch damage.**

WINDOWS

POWER WINDOWS

Basic information

WARNING

- **Make sure that all passengers have their hands, etc. inside the vehicle while it is in motion and before closing the windows. Use the window lock switch to prevent unexpected use of the power windows.**
- **To help avoid risk of injury or death through unintended operation of the vehicle and or its systems, including entrapment in windows or inadvertent door lock activation, do not leave children, people who require the assistance of others or pets unattended in your vehicle. Additionally, the temperature inside a closed vehicle on a warm day can quickly become high enough to cause a significant risk of injury or death to people and pets.**

The power windows operate when the power switch is in the ON position, or for a period of time after the power switch is

placed in the OFF position. If the driver's or front passenger's door is opened during this period of time, power to the windows is canceled.

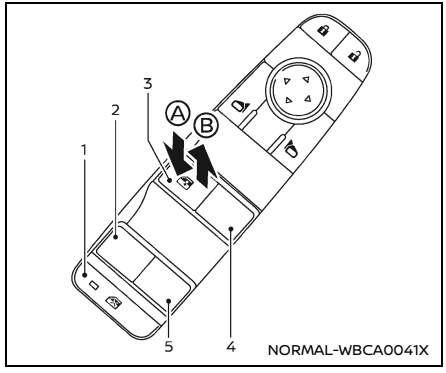

1. Window lock button
2. Rear left passenger side window
3. Driver side window
4. Front passenger side window
5. Rear right passenger side window

Main power window switch (driver's side)

To open or close the window, push down Ⓐ or pull up Ⓑ the switch and hold it. The main switch (driver side switches) will open or close all the windows.

Locking rear passenger's windows

When the window lock button is pushed (the indicator illuminates), the rear passenger's windows cannot be operated with the rear passenger's power window switch. The rear passenger's windows can only be operated with the main switch (driver side switches). To cancel the passenger's windows lock, push the window lock button again.

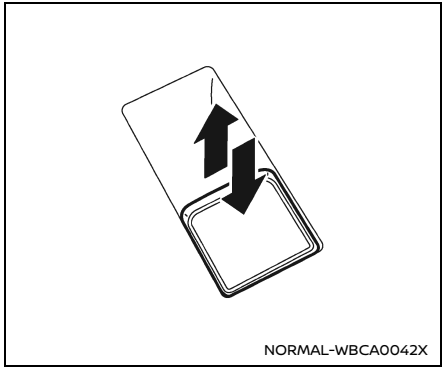

Passenger side power window switch

The passenger's switch can control its corresponding window. When the window lock button on the driver's switch is pushed, the rear passenger's switch cannot be operated.

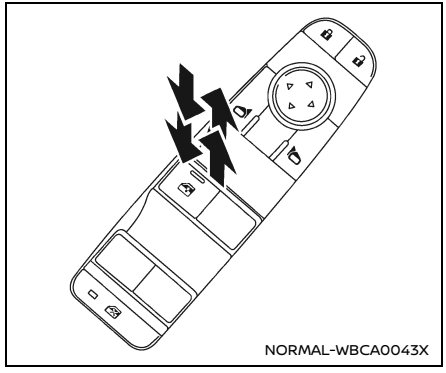

Automatic operation

The automatic function enables a window to fully open or close without holding the switch down or up.

To fully open the window, push the power window switch down to the second detent and release the switch. To fully close the window, pull the power window switch up to the second detent and release the switch. The switch does not have to be held during window operation.

To stop the window open/close operation during the automatic function, push down or pull up the switch in opposite directions.

Window timer:

The window timer allows the window switch to be operated for a short time even if the power switch is placed in the OFF position. The window timer will be cancelled when the driver's or front passenger's side door is opened or the preset time has expired.

Auto-reverse function (if so equipped)

WARNING

There are some small distances immediately before the closed position which cannot be detected. Make sure that all passengers have their hands, etc., inside the vehicle before closing the window.

The auto-reverse function enables a window to automatically reverse when something is caught in the window as it is closing by the automatic function. When the control unit detects an obstacle, the window will be lowered immediately.

Depending on the environment or driving conditions, the auto-reverse function may activate if an impact or load similar to something being caught in the window occurs.

When power window switch does not operate

If the power window automatic function does not operate properly, perform the following procedure to initialize the power window functions.

1. Close the door.
2. Place the power switch in the ON position.
3. Pull the power window switch and hold it to fully close the window.*1
4. Release the power window switch.
5. Pull the power window switch and hold it for approximately 5 seconds or more.*2
6. Push the power window switch down and hold it to fully open the window.
7. Release the power window switch.
8. Push the power window switch down and hold it for approximately 5 seconds or more.*2
9. Pull the power window switch and hold it to fully close the window.*1
10. Operate the window by the automatic function (window open and close) to confirm that the initialization is complete.

*1: If the window stops before reaching the fully closed position, release the switch, then pull and hold it again to fully close the window.

*2: After pulling or pushing the power window switch and holding it for approximately 5 seconds or more, the window will move again.

If the window cannot automatically be closed since the auto-reverse function activated due to a malfunction, perform the following procedure to cancel the auto-reverse function.

1. Pull the power window switch up until the auto-reverse function is activated, then the window will reverse automatically.
2. Repeat the procedure twice.
3. Pull the power window switch and hold it to close the window to confirm that the cancellation is completed.

WARNING

When the auto-reverse function is canceled, the window will not automatically reverse even if the control unit detects an obstacle. Make sure that all passengers have their hands, etc. inside the vehicle before closing the windows.

If the power window functions do not operate properly after performing the procedure above, have your vehicle checked. It is recommended that you visit a NISSAN certified LEAF dealer.

DIMMING PANORAMIC ROOF WITH HEAT SHIELDING (if so equipped)

BASIC INFORMATION

WARNING

Never disassemble, remove or replace the Dimming Panoramic Roof, as this system contains high voltage components. Severe burns or electric shock that may result in serious injury or death may occur.

If service is required, it is recommended to consult a NISSAN certified LEAF dealer.

The Dimming Panoramic Roof can be set to transparent or opaque with the operation of the switch.

Dimming Panoramic Roof has 4 positions:

- Totally opaque
- Front half: Opaque, Rear Half: Transparent
- Front half: Transparent, Rear Half: Opaque
- Totally transparent

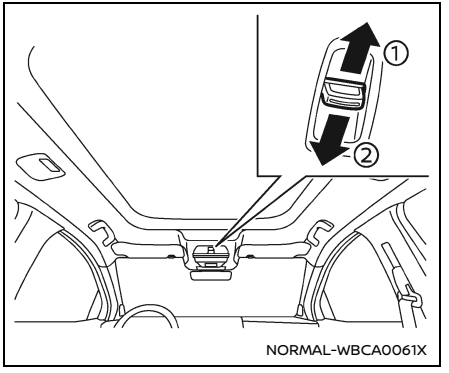

SYSTEM OPERATION

Push the switch toward the back of the vehicle ①. The front half of the glass roof gradually becomes transparent.

Push and hold the switch toward the back of the vehicle ①. The glass roof becomes totally transparent.

Push the switch toward front of the vehicle ②. The rear half of the glass roof gradually becomes opaque.

Push and hold the switch toward front of the vehicle ②. The glass roof becomes totally opaque.

NOTE:

- **The glass roof becomes totally opaque after the power switch is turned to off and the door are locked.**
- **After the power switch is turned to on, the glass roof returns to the previous setting before the power switch turned off.**
- **In very hot or cold weather, the transparency of the glass roof may change.**
- **In very cold weather conditions, the Dimming Panoramic Roof may have limited operation or may not work at all.**
- **If the vehicle is subjected to an impact, the glass roof may remain in the opaque state. Have the vehicle checked. It is recommended to visit a NISSAN certified LEAF dealer for this service.**
- **Depending on the angle, the glass roof may appear untransparent.**

INTERIOR LIGHTS

BASIC INFORMATION

CAUTION

- **Do not leave the light switch on when the EV system is not running for extended periods of time to prevent the 12-volt battery from being discharged.**
- **Turn off the lights when you leave the vehicle.**

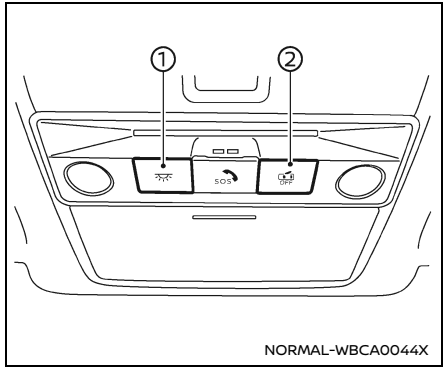

Example

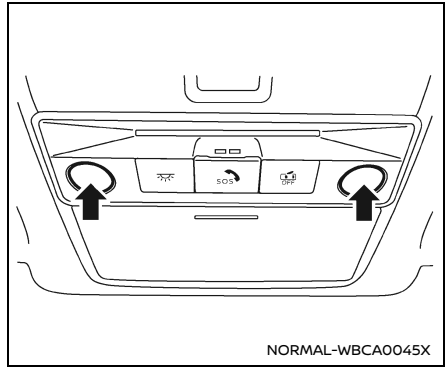

Example

INTERIOR LIGHT SWITCH

① The interior lights can be turned ON regardless of door position. The lights will go off after a period of time unless the power switch is placed in the ON position when any door is opened.

② The interior lights can be set to operate when the doors are opened. To turn off the interior lights when a door is open, touch the switch, the interior lights will not illuminate, regardless of door position. The lights will go off when the power switch is placed in the ON position, or the driver's door is closed and locked.

MAP LIGHTS

Push the light to turn the map lights on. To turn the light off, push the light again

The lights will also turn off after a period of time when the lights remain illuminated to prevent the 12-volt battery from becoming discharged.

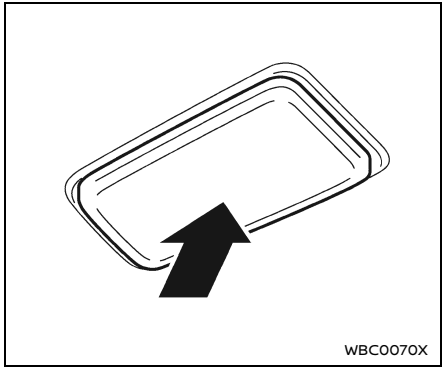

REAR PERSONAL LIGHTS (if so equipped)

To turn the rear personal light on, touch the light. Touch the light again to dim the light. To turn off the light, touch the light once again.

The lights will also turn off after a period of time when the lights remain illuminated to prevent the 12–volt battery from becoming discharged.

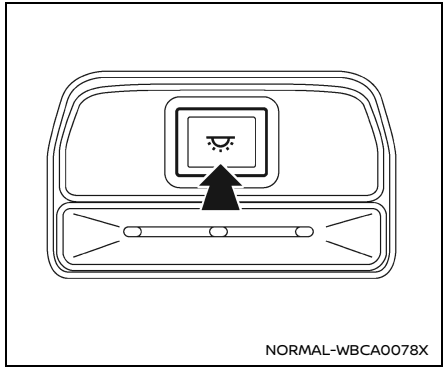

REAR ROOM LIGHT (if so equipped)

To turn on the rear room light, push the switch.

To turn off the rear room light, push the switch again.

The lights will also turn off after a period of time when the lights remain illuminated to prevent the 12–volt battery from becoming discharged.

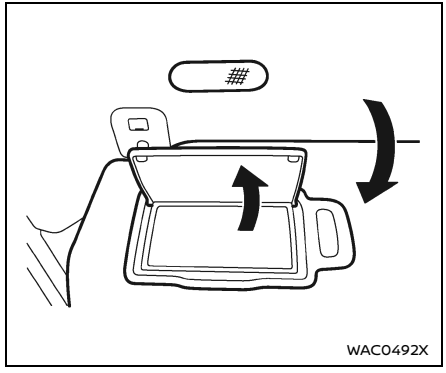

VANITY MIRROR LIGHT (if so equipped)

The light over the vanity mirror will turn on when the cover on the vanity mirror is opened.

When the cover is closed, the light will turn off.

The lights will also turn off after a period of time when the lights remain illuminated to prevent the 12–volt battery from becoming discharged.

CARGO LIGHT

The cargo light illuminates when the liftgate is opened.

The light will turn off after a period of

time when the light remains illuminated to prevent the battery from becoming discharged.

MEMO

3 Pre-driving checks and adjustments

Keys 260
Intelligent Key 260
Doors 262
Basic information 262
Flush Door Handle 262
Locking with inside lock knob 265
Locking with power door lock switch 266
Automatic door locks 266
Child safety rear door lock 266
Intelligent Key system 267
Basic information 267
Intelligent Key operating range 269
Door locks/unlocks precaution 269
Intelligent Key operation 270
Approach unlock function 272
Walk away lock function 273
12-volt battery saver system 273
Warning lights and audible reminders 273
Troubleshooting guide 273
How to use remote keyless entry function 274
Hood 279
Liftgate 280
Basic information 280
Operating manual liftgate (if so equipped) 280
Operating power liftgate (if so equipped) 281
Motion-activated liftgate (if so equipped) 283
Garage mode system (if so equipped) 284
Auto closure (if so equipped) 285
Liftgate release lever 285
Charge port lid 285
Opening charge port lid 285
Charge port cap 286
Charge port light 287
Steering wheel 288
Basic information 288
Tilt and telescopic operation 288
Sun visors 288
Assist grips 289
Mirrors 289
Inside mirror 289
Outside mirrors 290
Vanity mirror 292
Memory seat (if so equipped) 292
Basic information 292
Memory storage function 293
Entry/Exit function 293
System operation 294

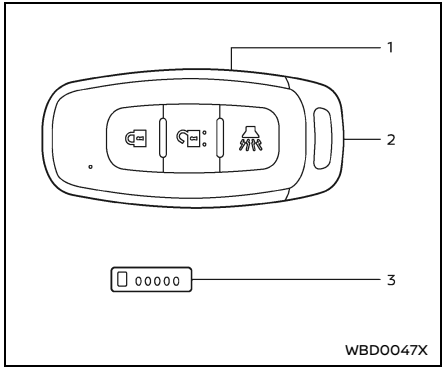

Type A (if so equipped)

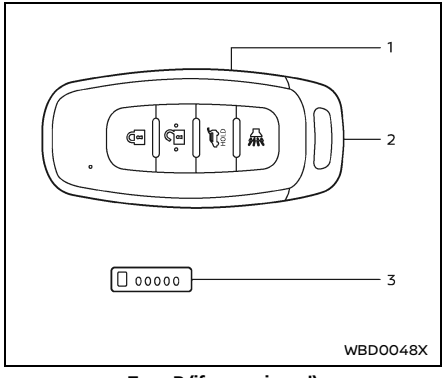

Type B (if so equipped)

1. Intelligent Key (2)
2. Mechanical key (inside Intelligent Key) (2)
3. Key number plate

INTELLIGENT KEY

Basic information

Your vehicle can only be driven with the Intelligent Keys which are registered to your vehicle's Intelligent Key system components and NISSAN Anti-Theft System (NATS) components. As many as 4 Intelligent Keys can be registered and used with one vehicle. The new keys must be registered by a NISSAN certified LEAF dealer prior to use with the Intelligent Key system and NISSAN Anti-Theft System (NATS) of your vehicle. Since the registration process requires erasing all memory in the Intelligent Key components when registering new keys, be sure to take all Intelligent Keys that you have to the NISSAN certified LEAF dealer.

A key number plate is supplied with your keys. Record the key number and keep it in a safe place (such as your wallet), not in the vehicle. If you lose your keys, it is recommended you visit a NISSAN certified LEAF dealer for duplicates by using the key number. NISSAN does not record any key numbers so it is very important to keep track of your key number plate.

A key number is only necessary when you have lost all keys and do not have one to duplicate from. If you still have a key, it can be duplicated without knowing the key number.

CAUTION

- **Be sure to carry the Intelligent Key with you when driving. The Intelligent Key is a precision device with a built-in transmitter. To avoid damaging it, please note the following.**
  - **The Intelligent Key is water resistant; however, wetting may damage the Intelligent Key. If the Intelligent Key gets wet, immediately wipe until it is completely dry.**
  - **Do not bend, drop or strike it against another object.**
  - **If the outside temperature is below 14°F (-10°C) degrees, the battery of the Intelligent Key may not function properly.**
  - **Do not place the Intelligent Key for an extended period in a place where temperatures exceed 140°F (60°C).**

- **Do not change or modify the Intelligent Key.**
- **Do not use a magnet key holder.**
- **Do not place the Intelligent Key near an electric appliance such as a television set, personal computer or cellular phone.**
- **Do not allow the Intelligent Key to come into contact with water or salt water, and do not wash it in a washing machine. This could affect the system function.**

If an Intelligent Key is lost or stolen, NISSAN recommends erasing the ID code of that Intelligent Key. This will prevent the Intelligent Key from unauthorized use to unlock the vehicle. For information regarding the erasing procedure, it is recommended you visit a NISSAN certified LEAF dealer.

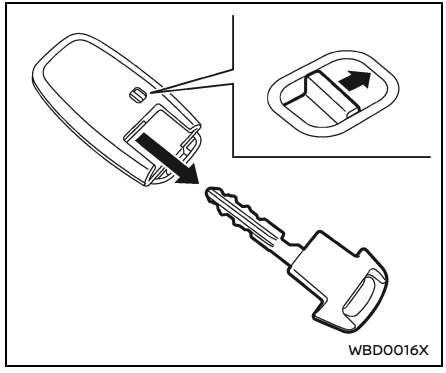

Mechanical key

To remove the mechanical key, release the lock knob at the back of the Intelligent Key.

To install the mechanical key, firmly insert it into the Intelligent Key until the lock knob returns to the lock position.

Use the mechanical key to lock or unlock the driver's door. (See "Doors" (P.262).)

The mechanical keys are separating type. When locking and unlocking the door with the mechanical key, separate the emergency key plate from the key head before inserting it into the key cylinder.

See "How to separate the emergency key:" (P.262).

CAUTION

Always carry the mechanical key installed in the Intelligent Key.

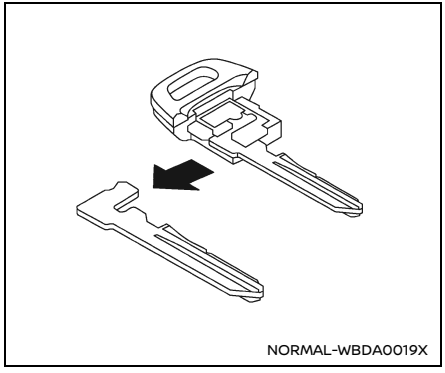

Example

How to separate the emergency key:

When locking and unlocking the door with the mechanical key, separate the emergency key plate from the key head before inserting it into the key cylinder. Otherwise, the key cannot be inserted into the key cylinder and may cause damage to the door handle or the vehicle body.

To separate the key plate from the key head, pull out the key plate from the key head as shown.

BASIC INFORMATION

WARNING

- **Always have the doors locked while driving. Along with the use of seat belts, this provides greater safety in the event of an accident by helping to prevent persons from being thrown from the vehicle. This also helps keep children and others from unintentionally opening the doors, and will help keep out intruders.**
- **Before opening any door, always look for and avoid oncoming traffic.**
- **To help avoid risk of injury or death through unintended operation of the vehicle and/or its systems, including entrapment in windows or inadvertent door lock activation, do not leave children, people who require the assistance of others or pets unattended in your vehicle. Additionally, the temperature inside a closed vehicle on a warm day can quickly become high enough to cause a significant risk of injury or death to people and pets.**

FLUSH DOOR HANDLE

Basic information

WARNING

Be careful that your or the passenger's fingers or accessories are not caught in the moving parts. Injuries may occur.

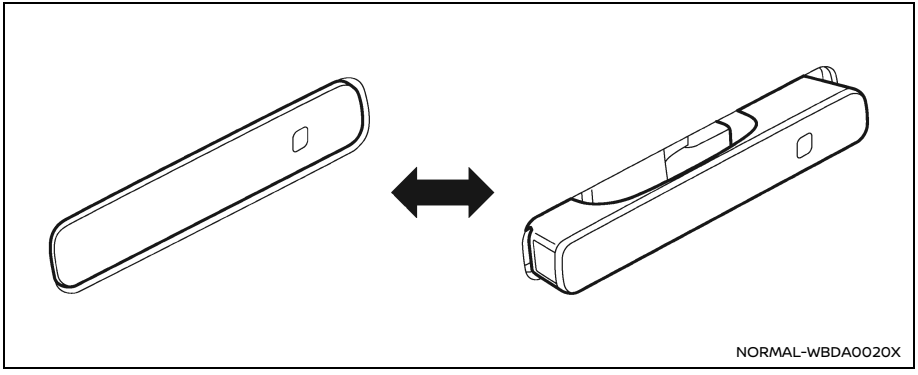

The front door handles of this vehicle are retractable.

The door handles will extend outward when one of the following condition is met.

- You approach the vehicle with the Intelligent Key.
- The vehicle is unlocked.
- A door is opened.
- If vehicle detects a collision (depending on the severity of the collision).

NOTE:

- **When you approach the vehicle from the front, the door handle may not extend outward until you get close to the vehicle.**
- **The door handles may not extend outward when you approach the vehicle under the following conditions.**
  - **When the Intelligent Key is placed inside of the vehicle.**
  - **When you place the Intelligent Key near the vehicle for a period of time.**
  - **When the EV system is in the READY to drive position.**
  - **When 8 days have passed since the vehicle is locked.**
  - **When you have locked the vehicle with the power door lock switch (see "Locking with power door lock switch" (P.266)) or the inside lock knob (see "Locking with inside lock knob" (P.265)).**
- **If the door handles do not extend outward when you approach the vehicle, push the UNLOCK button of the Intelligent Key (see "Unlocking doors" (P.276)).**
- **When the door handles do not extend outward when you approach the vehicle, first unlock the vehicle with the Intelligent Key. The approach extension function will be disabled when 8 days have passed since the vehicle was locked.**

The door handles will be retracted when one of the following condition is met.

- You walk away from the vehicle with the Intelligent Key after the vehicle has been locked.
- About 5 minutes have passed after the vehicle has been locked. Door handles will not be retracted immediately after the vehicle is locked, as the occupants may re-enter the vehicle.
- When the vehicle reaches a certain speed.

- When the vehicle is locked by the power door lock switch (see "Locking with power door lock switch" (P.266)) or the automatic door locks (see "Automatic door locks" (P.266)).
- When the vehicle is in the R (Reverse) position.

NOTE:
When the "Ext. Door Switch" item has been turned off in the vehicle information display, the door handle will be retracted when the door is locked.

To extend outward the door handle from inside of the vehicle

If you need to extend outward the door handle from inside of the vehicle, for example when picking up a person, push the power door lock switch to the unlock position.

See "Locking with power door lock switch" (P.266).

If the door handle does not extend outward

If the door handle does not extend outward due to a discharged battery, you can unlock the door by the following procedure.

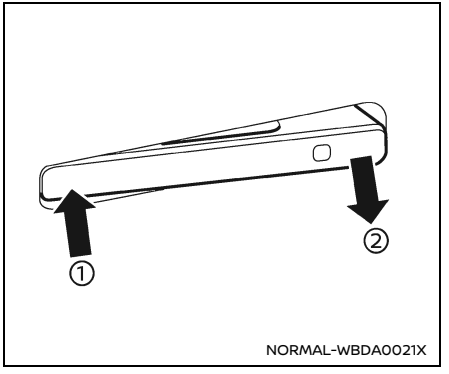

Step 1 — 2

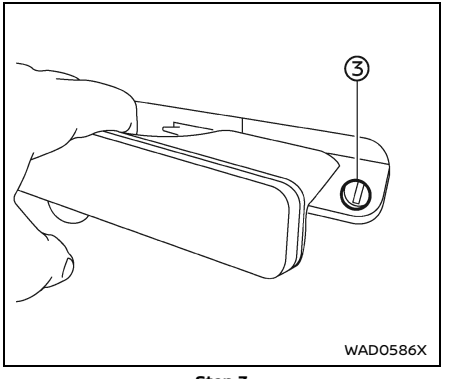

Step 3

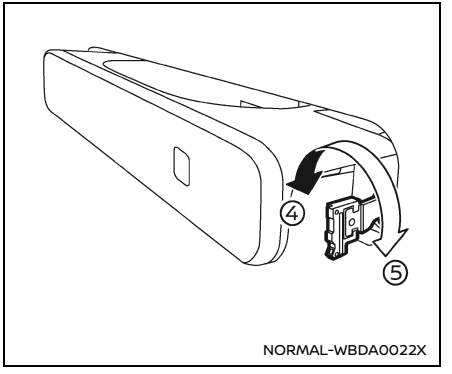

Step 4

1. Push the front part of the door handle of the driver's door ①.
2. Pull the door handle out from its stored position ②.
3. Pull out the mechanical key from the Intelligent Key, then separate the key plate from the key head (see "Mechanical key" (P.261)).

   Then insert the key plate to the driver's door key cylinder ③.
4. To unlock the door, turn the key cylinder to the front of the the vehicle ④.

   To lock the door, turn the key cylinder to the rear of the vehicle ⑤.

NOTE:
Please be careful not to damage the paint surface when inserting the mechanical key.

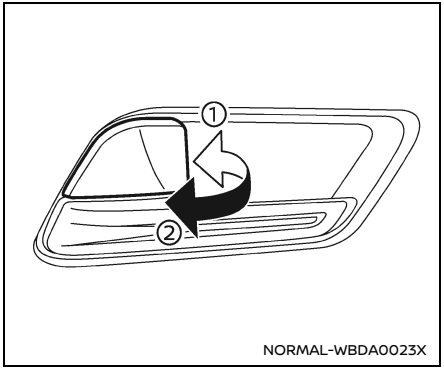

LOCKING WITH INSIDE LOCK KNOB

To lock the door without the key, move the inside lock knob to the lock position ① then close the door.

To unlock, move the inside lock knob to the unlock position ②.

To unlock and open the front door without using the lock knob, pull once on the door handle to unlock it, and again to open it.

When locking the door without a key, be sure not to leave the key inside the vehicle.

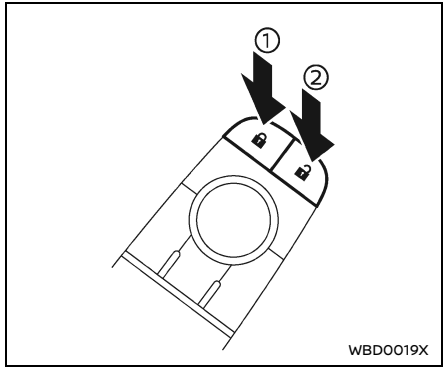

Driver's armrest

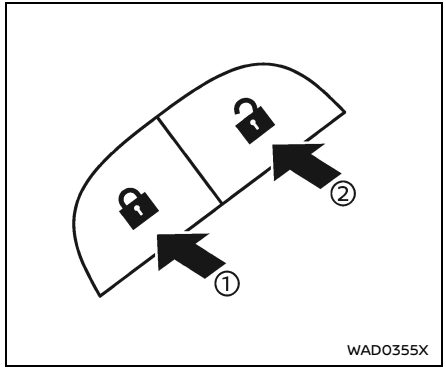

Front passenger's armrest

LOCKING WITH POWER DOOR LOCK SWITCH

Basic information

Operating the power door lock switch (located on the driver's and front passenger's doors) will lock or unlock all the doors.

To lock the doors, push the power door lock switch to the lock position ① with all doors closed.

When locking the door this way, be sure not to leave the key inside the vehicle.

To unlock the doors, push the power door lock switch to the unlock position ②.

Lockout protection

Lockout protection function helps to prevent the keys from being accidentally locked inside the vehicle.

When the lock sensor is touched with the Intelligent Key left in the vehicle and all doors closed, doors will unlock automatically and a chime will sound.

AUTOMATIC DOOR LOCKS

- All doors lock automatically when the vehicle speed reaches 15 MPH (24 km/h).
- All doors unlock automatically when the power switch is placed in the OFF position or when the shift position is placed in the P (Park) position, if selected.

NOTE:
The Automatic door unlock feature can be changed using the "Vehicle Settings" menu on the vehicle information display. (See "Vehicle Settings" (P.175).)

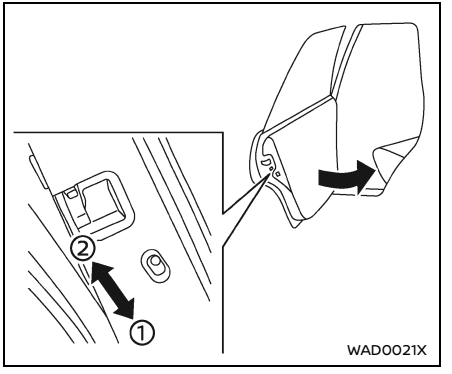

CHILD SAFETY REAR DOOR LOCK

Child safety rear door locks help prevent the rear doors from being opened accidentally, especially when small children are in the vehicle.

When the levers are in the lock position ①, the rear doors can be opened only from the outside.

To disengage, move the levers to the unlock position ②.

BASIC INFORMATION

WARNING

- **Radio waves could adversely affect electric medical equipment. Those who use a pacemaker should contact the electric medical equipment manufacturer for the possible influences before use.**
- **The Intelligent Key transmits radio waves when the buttons are pushed. The radio waves may affect aircraft navigation and communication systems. Do not operate the Intelligent Key while on an airplane. Make sure the buttons are not operated unintentionally when the unit is stored during a flight.**

The Intelligent Key system can operate all the door locks using the remote controller function, touching lock or capacitive unlock sensor or pushing the request switch on the vehicle without taking the key out from a pocket or purse. The operating environment and/or conditions may affect the Intelligent Key system operation.

Be sure to read the following before using the Intelligent Key system.

CAUTION

- **Be sure to carry the Intelligent Key with you when operating the vehicle.**
- **Never leave the Intelligent Key in the vehicle when you leave the vehicle.**

The Intelligent Key is always communicating with the vehicle as it receives radio waves. The Intelligent Key system transmits weak radio waves. Environmental conditions may interfere with the operation of the Intelligent Key system under the following operating conditions.

- When operating near a location where strong radio waves/noises are transmitted, such as a TV tower, power station and broadcasting station.
- When in possession of wireless equipment, such as a cellular phone, transceiver, and CB radio.
- When the Intelligent Key is in contact with or covered by metallic materials.
- When any type of radio wave remote control is used nearby.
- When the Intelligent Key is placed near an electric appliance such as a personal computer.
- When the vehicle is parked near a parking meter.

In such cases, correct the operating conditions before using the Intelligent Key function or use the mechanical key.

Although the life of the battery varies depending on the operating conditions, the battery's life is approximately 2 years. If the battery is discharged, replace it with a new one.

When the Intelligent Key battery is low, an indicator illuminates in the vehicle information display. (See "Key Battery Low warning" (P.179).)

Since the Intelligent Key is continuously receiving radio waves, if the key is left near equipment which transmits strong radio waves/noises, such as signals from a TV and personal computer, the battery life may become shorter.

For information regarding replacement of a battery, see "Intelligent Key battery replacement" (P.525).

As many as 4 Intelligent Keys can be registered and used with one vehicle. For information about the purchase and use of additional Intelligent Keys, it is recommended that you contact a NISSAN certi-

fied LEAF dealer.

⚠ CAUTION

- **Do not allow the Intelligent Key, which contains electrical components, to come into contact with water or salt water. This could affect the system function.**
- **Do not drop the Intelligent Key.**
- **Do not strike the Intelligent Key sharply against another object.**
- **Do not change or modify the Intelligent Key.**
- **Wetting may damage the Intelligent Key. If the Intelligent Key gets wet, immediately wipe until it is completely dry.**
- **If the outside temperature is below 14°F (–10°C) degrees, the battery of the Intelligent Key may not function properly.**
- **Do not place the Intelligent Key for an extended period in an area where temperatures exceed 140°F (60°C).**
- **Do not attach the Intelligent Key with a key holder that contains a magnet.**
- **Do not place the Intelligent Key near equipment that produces a magnetic field, such as a TV, audio equipment, personal computers, cellular phone or wireless charger.**

If an Intelligent Key is lost or stolen, NISSAN recommends erasing the ID code of that Intelligent Key from the vehicle. This may prevent the unauthorized use of the Intelligent Key to operate the vehicle. For information regarding the erasing procedure, it is recommended that you contact a NISSAN certified LEAF dealer.

The Intelligent Key function can be disabled. For information about disabling the Intelligent Key function, it is recommended that you contact a NISSAN certified LEAF dealer.

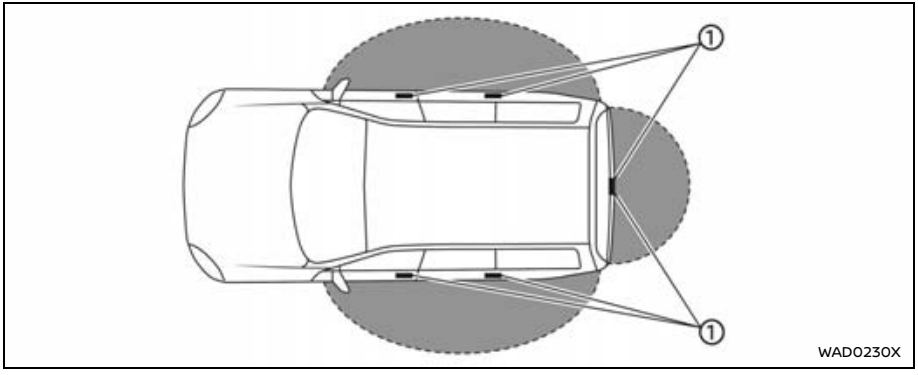

INTELLIGENT KEY OPERATING RANGE

The Intelligent Key functions can only be used when the Intelligent Key is within the specified operating range from the lock or capacitive unlock sensors or the liftgate request switch ① (if so equipped).

When the Intelligent Key battery is discharged or strong radio waves/noises are present near the operating location, the Intelligent Key system's operating range becomes narrower, and the Intelligent Key may not function properly.

The operating range is within 31.50 in (80 cm) from each sensor or request switch ①.

If the Intelligent Key is too close to the door glass, handle or rear bumper, the sensors or the request switch may not function.

When the Intelligent Key is within the operating range, it is possible for anyone who does not carry the Intelligent Key to use the lock or capacitive unlock sensors or request switch to lock or unlock the doors including the liftgate.

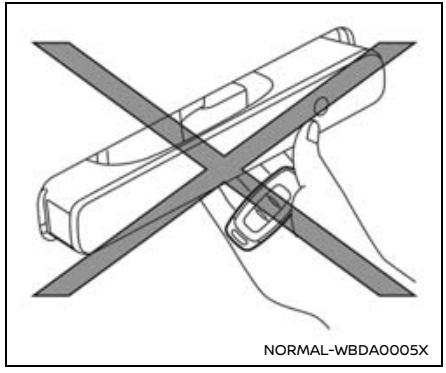

DOOR LOCKS/UNLOCKS PRECAUTION

- Do not use the lock or capacitive unlock sensors or the liftgate request switch (if so equipped) with the Intelligent Key held in your hand as illustrated. The close distance to the door handle will cause the Intelligent Key system to have difficulty recognizing that the Intelligent Key is outside the vehicle.
- After locking with the lock sensors or the request switch, verify the doors are securely locked by testing them.
- To prevent the Intelligent Key from being left inside the vehicle, make sure

you carry the key with you and then lock the doors.

- Do not pull the door handle before unlocking it by the capacitive unlock sensor or the request switch.

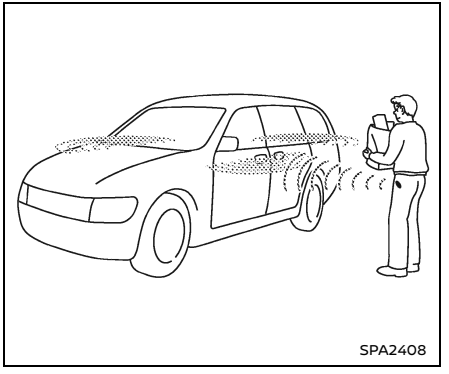

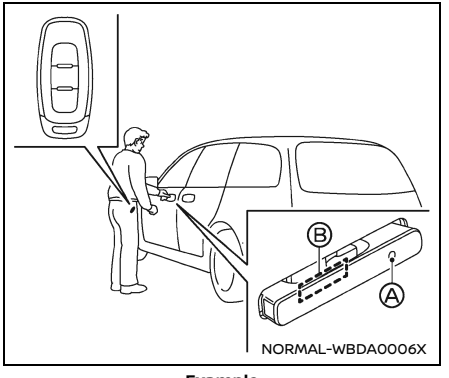

Example

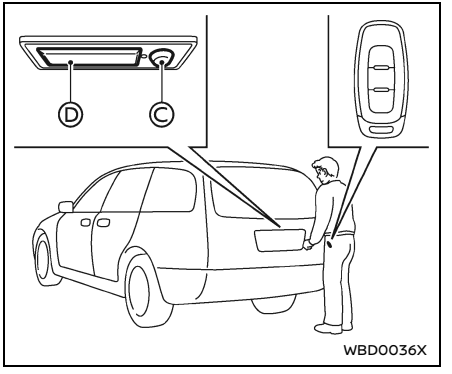

Example

Ⓐ Lock sensor
Ⓑ Capacitive unlock sensor
Ⓒ Liftgate request switch (if so equipped)
Ⓓ Liftgate opener switch

INTELLIGENT KEY OPERATION

Basic information

You can lock or unlock the doors without taking the key out from your pocket or bag.

When you carry the Intelligent Key with you, you can lock all doors by using the lock sensor (located on the front door handles) or liftgate request switch within

the range of operation.

You can unlock all the door and liftgate by touching the capacitive unlock sensor (located inside of the front door handles) within the range of operation.

When you lock or unlock the doors, the hazard indicator will flash and the outside chime will sound as a confirmation. For details, see "Setting hazard indicator and horn mode" (P.277).

NOTE:

- **The lock or capacitive unlock sensors and the liftgate request switch can be deactivated in the Vehicle Settings of the vehicle information display. (See "Vehicle Settings" (P.175).)**
- **The lock or capacitive unlock sensors are operational only when the Intelligent Key has been detected by the Intelligent Key system.**

Welcome light function

When you unlock the doors or the liftgate, the emblem light (if so equipped), parking lights and the tail lights will illuminate for a period of time. The welcome light function can be disabled. For information about disabling the welcome light function, see "Vehicle Settings" (P.175).

With the doors locked and when approaching or leaving the vehicle with the Intelligent Key, the emblem light, parking lights and the tail lights illuminate. (If you approach or leave the vehicle several times without unlocking the door, the light may not illuminate to prevent unintended activation of the function.)

Locking doors

1. Push the P (Park) button to engage the P (Park) position. Place the power switch in the OFF position and make sure you carry the Intelligent Key with you.
2. Close all doors.
3. Touch the lock sensor or push the liftgate request switch (if so equipped) while carrying the Intelligent Key with you.
4. All doors and the liftgate will lock.
5. The hazard indicator lights flash twice and the outside buzzer sounds twice.

NOTE:

- **Doors lock with the lock sensor or liftgate request switch while the power switch is in the ON position. The EV system will stop automatically.**
- **Doors do not lock by driver's door lock sensor while the driver's door is open. However, doors lock with the mechanical key even if any door is open.**
- **Doors do not lock with the lock sensor or the liftgate request switch with the Intelligent Key inside the vehicle and a beep sounds to warn you. However, when an Intelligent Key is inside the vehicle, doors can be locked with another Intelligent Key.**

CAUTION

- **After locking the doors using the lock sensor or the liftgate request switch, make sure that the doors have been securely locked by operating the door handles or the liftgate opener switch.**
- **When locking the doors using the lock sensor or the liftgate request switch, make sure to have the Intelligent Key in your possession before operating the lock sensor or the liftgate request switch to prevent the Intelligent Key from being left in the vehicle.**

Unlocking doors

1. Carry the Intelligent Key with you.

2. Wrap the door handle (capacitive unlock sensor) or push the liftgate request switch (if so equipped).
3. The hazard indicator flashes once and outside chime sounds once.
   - When the driver's door handle capacitive unlock sensor or the liftgate request switch is used:
     The corresponding door or the liftgate will unlock.
   - When the other door handle capacitive unlock sensor is used:
     All doors and the liftgate will unlock.
4. Touch the lock sensor or push the liftgate request switch again within 1 minute.
5. The hazard indicator flashes once and outside chime sounds once again. All the doors and the liftgate will unlock.

⚠ CAUTION

If a door handle is pulled while unlocking the doors, that door may not be unlocked. Returning the door handle to its original position will unlock the door. If the door does not unlock, after returning the door handle, touch the capacitive unlock sensor or push the request switch to unlock the door.

All doors will be locked automatically unless one of the following operations is performed within 1 minute after touching the capacitive unlock sensor or pushing the request switch while the doors are locked.

- Opening any doors.
- Pushing the power switch.

If during the preset time period, the "UNLOCK" button on the Intelligent Key is pushed, all doors will be locked automatically after another 1 minute.

NOTE:
The unlocking operation can be changed in "Selective Unlock" under the Vehicle Settings of the vehicle information display. For additional information, see "Vehicle Settings" (P.175).

Opening liftgate

1. Carry the Intelligent Key.
2. Push the liftgate opener switch.
3. The liftgate will unlock and then open.

APPROACH UNLOCK FUNCTION

When you approach the vehicle with the Intelligent Key, the vehicle (all the doors) will be unlocked automatically by the approach unlock function (the operation range is around 3 ft (1 m)). This function is disabled by the default setting. You can enable this function by the vehicle information display. For additional information, see "Vehicle Settings" (P.175).

NOTE:
- **When you approach the vehicle from the front, the approach unlock function may not operate unless you get close to the door.**
- **The approach unlock function may not operate under the following conditions:**
  - **When the Intelligent Key is placed inside of the vehicle.**
  - **When you place the Intelligent Key outside of the vehicle for a period of time. (When a door is unlocked and locked, the approach unlock function will be activated.)**
  - **When 8 days have passed since the vehicle was locked.**
  - **When you lock the vehicle with the power door lock switch.**
- **If the approach unlock function is activated while the selective unlock function is turned on, the selective unlock function is deactivated automatically. If the selective unlock function is activated while the approach unlock function is turned on, the approach unlock function is deactivated automatically.**

Once the approach unlock function is activated, the selective unlock function needs to be activated with the vehicle information display if you want to use the selective unlock function.

WALK AWAY LOCK FUNCTION

When you walk away from the vehicle with the Intelligent Key, the vehicle will be locked automatically by the walk away lock function (the operation range is around 7 ft (2 m)). This function is disabled by the default setting. You can enable this function by the vehicle information display. For additional information, see "Vehicle Settings" (P.175).

NOTE:

- **When the doors are locked by the walk away lock function, the hazard indicator lights flash twice. Be sure to confirm the door locks before you leave the vehicle.**
- **The walk away lock function may not operate under the following conditions:**
  - **When the door(s) and/or the liftgate are not closed securely.**
  - **When the EV system is running.**
  - **When the Intelligent Key is placed inside of the vehicle.**
  - **When you place the Intelligent Key outside of the vehicle for a period of time. (When a door is opened and closed, the walk-away lock function will be activated.)**

12-VOLT BATTERY SAVER SYSTEM

When the following is met for a period of time, the battery saver system will cut off the power supply to prevent 12-volt battery discharge.

- The power switch is in the ON position. (See "Power switch positions" (P.341).)

WARNING LIGHTS AND AUDIBLE REMINDERS

To help prevent the vehicle from moving unexpectedly by erroneous operation of the Intelligent Key listed on the following chart or to help prevent the vehicle from being stolen, chime or beep sounds inside and outside the vehicle and the warning display appears on the vehicle information display.

When a chime or beep sounds or the warning display appears, be sure to check the vehicle and Intelligent Key.

See "Troubleshooting guide" (P.273) and "Vehicle information display" (P.170).

TROUBLESHOOTING GUIDE

Verify the location of all Intelligent Keys that are programmed for the vehicle. If another Intelligent Key is in range or inside the vehicle, the vehicle system may respond differently than expected.

Symptom: When closing the door after getting out of the vehicle > The Key Not Detected warning appears on the display, the outside chime sounds 3 times and the inside warning chime sounds for a few seconds.
• Possible cause: The power switch is in the READY to drive position.
• Remedy: Push and hold the power switch three times to the OFF position.

Symptom: When closing the door after getting out of the vehicle > The outside chime sounds continuously.
• Possible cause: The power switch is in the OFF position, the electric shift control system has malfunctioned and the vehicle cannot be placed in the P (Park) position when the parking brake is not applied.
• Remedy: Make sure the parking brake is applied.

Symptom: When opening the driver's door after the EV system has stopped > The Check Rear Seat indicator appears on the display, then the horn sounds six times.
• Possible cause: The Rear Door Alert "Horn & Alert" setting (if so equipped) is selected.
• Remedy: Check the rear seat for occupants or items, clear the Rear Door Alert message by using the steering switches.

Symptom: When closing the door with the inside lock knob turned to LOCK > The outside chime sounds for a few seconds and all the doors unlock.

- Possible cause: The Intelligent Key is inside the vehicle or cargo area.
- Remedy: Carry the Intelligent Key with you.

Symptom: When touching the lock sensor or pushing the liftgate request switch (if so equipped) to lock doors > The outside chime sounds for a few seconds.

- Possible cause: The Intelligent Key is inside the vehicle or cargo area.
- Remedy: Carry the Intelligent Key with you.

Symptom: When pushing the power switch in the READY to drive position > The Key Battery Low warning appears on the display.

- Possible cause: The Intelligent Key battery charge is low.
- Remedy: Replace the battery with a new one. (See "Intelligent Key battery replacement" (P.525).)

Symptom: When pushing the power switch in the READY to drive position > The Key Not Detected warning appears on the display and the inside warning chime sounds for a few seconds.

- Possible cause: The Intelligent Key is not in the vehicle.
- Remedy: Carry the Intelligent Key with you.

Symptom: When pushing the power switch > The Key System Error warning indicator appears on the display.

- Possible cause: It warns of a malfunction with the Intelligent Key system.
- Remedy: It is recommended that you contact a NISSAN certified LEAF dealer.

HOW TO USE REMOTE KEYLESS ENTRY FUNCTION

Basic information

WARNING

- **Radio waves could adversely affect electric medical equipment. Those who use a pacemaker should contact the electric medical equipment manufacturer for the possible influences before use.**
- **The Intelligent Key transmits radio waves when the buttons are pushed. The radio waves may affect aircraft navigation and communication systems. Do not operate the Intelligent Key while on an airplane. Make sure the buttons are not operated unintentionally when the unit is stored during a flight.**

CAUTION

- **Do not allow the Intelligent Key, which contains electrical components, to come into contact with water or salt water. This could affect the system function.**
- **Do not drop the Intelligent Key.**
- **Do not strike the Intelligent Key sharply against another object.**
- **Do not change or modify the Intelligent Key.**
- **Wetting may damage the Intelligent Key. If the Intelligent Key gets wet, immediately wipe until it is completely dry.**
- **If the outside temperature is below 14°F (-10°C) degrees, the battery of the Intelligent Key may not function properly.**
- **Do not place the Intelligent Key for an extended period in an area where temperatures exceed 140°F (60°C).**
- **Do not attach the Intelligent Key with a key holder that contains a magnet.**

- **Do not place the Intelligent Key near equipment that produces a magnetic field, such as a TV, audio equipment, personal computers, cellular phone or wireless charger.**

The remote keyless entry function can operate all door locks using the remote keyless entry function of the Intelligent Key. The remote keyless entry function can operate at a distance of approximately 33 ft (10 m) from the vehicle. (The operating distance depends upon the conditions around the vehicle.)

The remote keyless entry function will not operate:

- When the Intelligent Key is not within the operational range.
- When the Intelligent Key battery is discharged.

The remote keyless entry function can also operate the vehicle alarm.

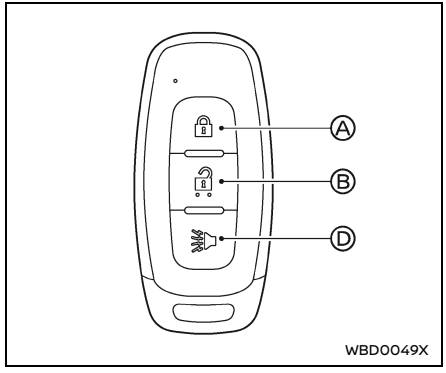

Type A (if so equipped)

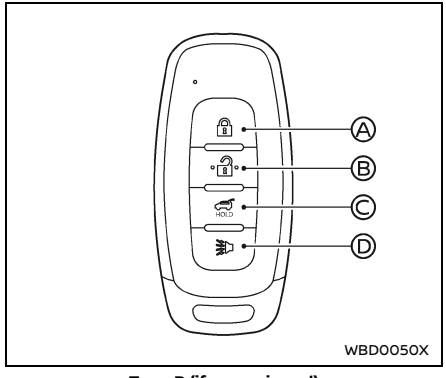

Type B (if so equipped)

Ⓐ LOCK button

Ⓑ UNLOCK button

Ⓒ Power liftgate button

Ⓓ PANIC button

When you lock or unlock the doors or the liftgate, the hazard indicator will flash and the horn will sound as a confirmation. For details, see "Setting hazard indicator and horn mode" (P.277).

Locking doors

1. Place the power switch in the OFF position.
2. Carry the Intelligent Key with you.*
3. Close all the doors.
4. Push the LOCK button on the Intelligent Key.
5. All the doors and the liftgate will lock.
6. The hazard indicator flashes twice and the horn chirps once.

*: Doors will lock with the Intelligent Key while the power switch is in the ON position. The EV system will stop automatically.

Operate the door handles to confirm that the doors have been securely locked.

Unlocking doors

1. Push the UNLOCK button on the Intelligent Key once.
2. The hazard indicator flashes once. The driver's door will unlock.
3. Push the UNLOCK button again within 1 minute.
4. The hazard indicator flashes once. All the doors and the liftgate will unlock.

All doors will be locked automatically unless one of the following operations is performed within 1 minute after pushing the UNLOCK button while the doors are locked.

- Opening any door (including the liftgate).
- Pushing the power switch.

During this 1-minute time period, if the UNLOCK button is pushed, all doors will be locked automatically after another 1 minute.

NOTE:
The unlocking operation can be changed in "Selective Unlock" under the Vehicle Settings of the vehicle information display. For additional information, see "Vehicle Settings" (P.175).

Opening window(s) (if so equipped)

The Intelligent Key allows you to simultaneously open the window(s) equipped with automatic operation. All doors must be closed and the key must be outside the vehicle.

To open the window(s) equipped with automatic operation, push and hold the button on the Intelligent Key **for longer than 3 seconds** after all doors are unlocked.

The door window(s) equipped with automatic operation will open while pushing the button on the Intelligent Key.

To interrupt opening of the window(s) equipped with automatic operation, release the button.

- The Intelligent Key cannot close any window.
- All doors will be unlocked by the operation.

Opening/closing liftgate (if so equipped)

1. Push the power liftgate button for more than 1 second.
2. The liftgate will automatically open.

The outside chime sounds 3 times.

To close the liftgate, push the power liftgate button for more than 1 second.

The liftgate will automatically close.

If the button is pushed while the liftgate is being opened or closed, the liftgate will immediately stop. Pushing the button again will reverse the direction of the liftgate. However, when the liftgate is near the fully open position, it moves in the closing direction and when the liftgate is near the fully close position, it moves in the opening direction.

Using panic alarm

If you are near your vehicle and feel threatened, you may activate the alarm to call attention as follows:

1. Push the PANIC button on the Intelligent Key for **more than 0.5 seconds.**
2. The theft warning alarm and hazard indicator lights will stay on for 25 seconds.
3. The panic alarm stops when:
   - It has run for 25 seconds, or
   - Any of the buttons on the Intelligent Key is pushed.

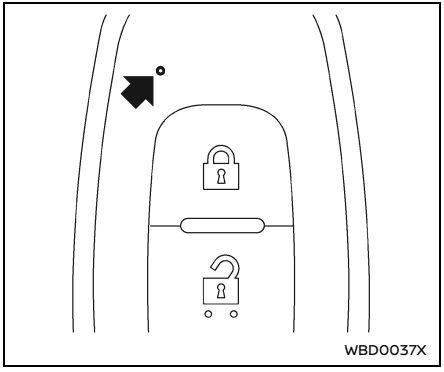

Intelligent Key button operation light

The light blinks only when you push any button on the Intelligent Key. The light illumination only signifies that the Intelligent Key has transmitted a signal. You may look and/or listen to verify that the vehicle has performed the intended operation. If the light does not blink, your battery may be too weak to communicate to the vehicle. If this occurs, the battery may need to be replaced.

For additional information regarding the replacement of a battery, see "Intelligent Key battery replacement" (P.525).

Setting hazard indicator and horn mode

This vehicle is set in hazard indicator and horn mode when you first receive the vehicle.

In hazard indicator and horn mode, when the LOCK button is pushed, the hazard indicator flashes twice and the horn chirps once. When the UNLOCK button is pushed, the hazard indicator flashes once.

If horns are not necessary, the system can be switched to the hazard indicator mode.

In hazard indicator mode, when the LOCK button is pushed, the hazard indicator flashes twice. When the UNLOCK button is pushed, neither the hazard indicator nor the horn operates.

Hazard indicator and horn mode:

Operation	DOOR LOCK	DOOR UNLOCK
Touching the lock or capacitive unlock sensor or liftgate request switch (if so equipped)	HAZARD - **twice** OUTSIDE CHIME - **twice**	HAZARD - **once** OUTSIDE CHIME - **once**
Walk away lock or approach unlock	HAZARD - **twice** OUTSIDE CHIME - **twice**	HAZARD - **once** OUTSIDE CHIME - **once**
Pushing 🔒 or 🔓 button	HAZARD - **twice** HORN - **once**	HAZARD - **once** HORN - none

Hazard indicator mode:

Operation	DOOR LOCK	DOOR UNLOCK
Touching the lock or capacitive unlock sensor or liftgate request switch (if so equipped)	HAZARD - **twice** OUTSIDE CHIME - none	HAZARD - none OUTSIDE CHIME - none
Walk away lock or approach unlock	HAZARD - **twice** OUTSIDE CHIME - none	HAZARD - none OUTSIDE CHIME - none
Pushing 🔒 or 🔓 button	HAZARD - **twice** HORN - none	HAZARD - none HORN - none

Switching procedure:

To switch the hazard indicator and horn (chime) operation, push the LOCK 🔒 and UNLOCK 🔓 buttons on the Intelligent Key simultaneously for more than 4 seconds.

- When the hazard indicator mode is set, the hazard indicator flashes 3 times.
- When the hazard indicator and horn mode is set, the hazard indicator flashes once and the horn chirps once.

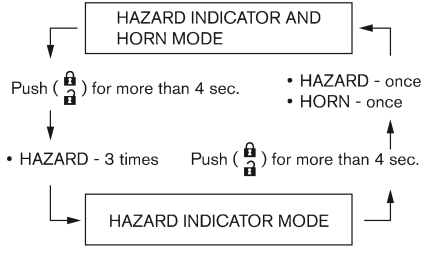

The horn operation can also be turned on or off in the vehicle information display. See "Vehicle Settings" (P.175).

WARNING

- **Make sure the hood is completely closed and latched before driving. Failure to do so could cause the hood to fly open and result in an accident.**
- **Never open the hood if steam or smoke is coming from the EV system compartment to avoid injury.**

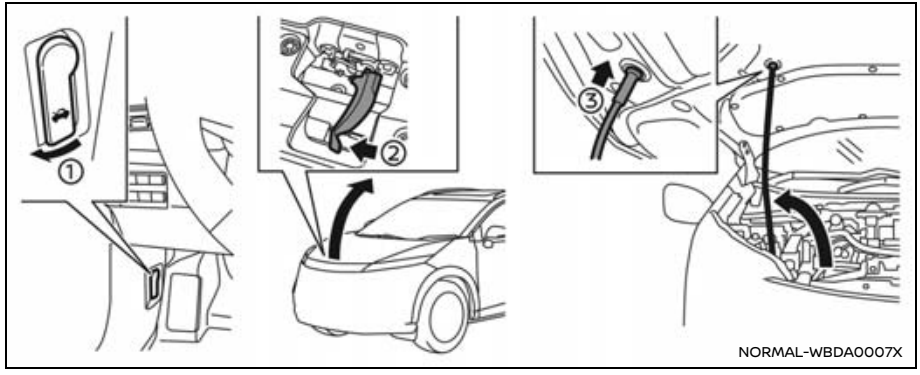

1. Pull the hood lock release handle ① located below the driver's side instrument panel; the hood springs up slightly.
2. Push the lever ② underneath the front of the hood sideways as illustrated with your fingertips.
3. Raise the hood.
4. Remove the support rod and insert it into the slot ③.

When closing the hood:

1. While supporting the hood, return the support rod to its original position.
2. Slowly lower the hood to about 8 to 12 in (20 to 30 cm) above the hood lock, then let it drop.
3. Make sure it is securely latched.

BASIC INFORMATION

WARNING

- **Always be sure the liftgate has been closed securely to prevent it from opening while driving.**
- **Do not drive with the liftgate open.**
- **To help avoid risk of injury or death through unintended operation of the vehicle and/or its systems, including entrapment in windows or inadvertent door lock activation, do not leave children, people who require the assistance of others or pets unattended in your vehicle. Additionally, the temperature inside a closed vehicle on a warm day can quickly become high enough to cause a significant risk of injury or death to people and pets.**
- **Always be sure that hands and feet are clear of the door frame to avoid injury while closing the liftgate.**

CAUTION

Do not use accessory carriers that attach to the liftgate. Doing so will cause damage to the vehicle.

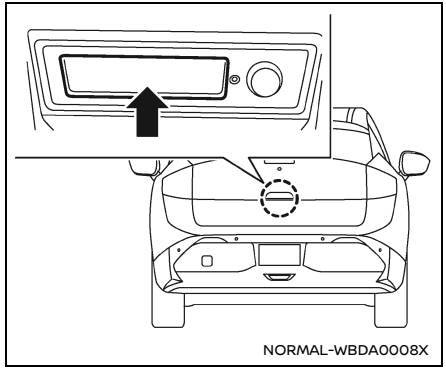

OPERATING MANUAL LIFTGATE (if so equipped)

To open the liftgate, unlock it. Pull up the liftgate to open.

The liftgate can be unlocked by:

- pushing the UNLOCK button on the Intelligent Key once (all door unlock mode) or twice (selective door unlock mode) .
- pushing the liftgate request switch (if so equipped).
- touching the capacitive unlock sensor (all door unlock mode).

To close the liftgate, pull down until it securely locks.

OPERATING POWER LIFTGATE (if so equipped)

To operate the power liftgate, the vehicle must be in the P (Park) position.

The power liftgate will not operate if the battery voltage is low.

If the liftgate is open approximately 5.9 in (150 mm) or less from the fully closed position, power liftgate cannot be performed by any switch operations. To operate the power liftgate, manually close the liftgate.

The power liftgate operation can be activated or deactivated in the vehicle information display. (See "Vehicle Settings" (P.175).)

NOTE:

- **For models with motion-activated liftgate: When washing, waxing or maintaining your vehicle, placing or replacing the body cover, or splashing water to the area around the kick motion sensor, turn off the power liftgate.**
- **If the power open or close operation is performed consecutively, the safety mode activates and the operation cannot be performed for a certain period of time. In this case, wait for a while and then perform the operation.**

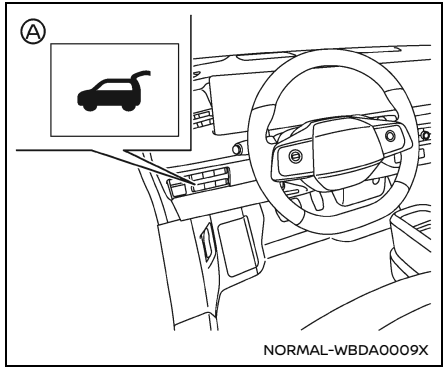

Power liftgate switch — Instrument panel

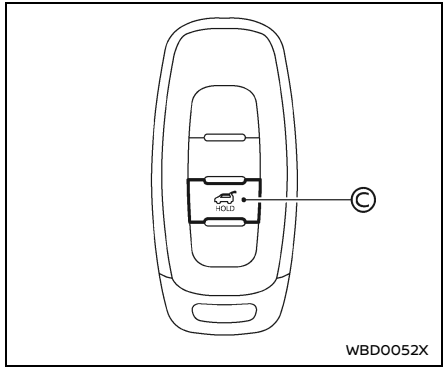

Power liftgate button - Key (example)

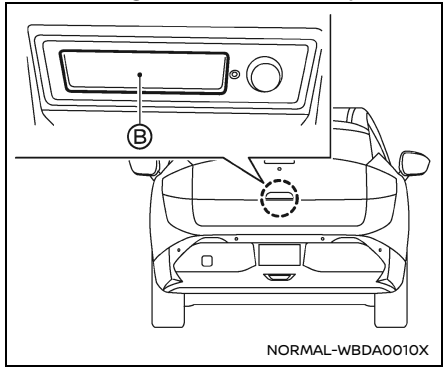

Liftgate opener switch

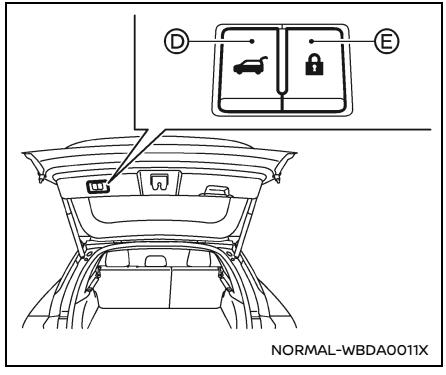

Power liftgate close and lock switches — Liftgate

Power open (using switches)

When the liftgate is fully closed, the liftgate will fully open automatically by:

- pushing the power liftgate switch Ⓐ on the instrument panel for more than 1 second
- pushing the liftgate opener switch Ⓑ
- pushing the power liftgate button Ⓒ on the key for more than 1 second

The outside chime sounds when the liftgate starts opening.

NOTE:
The liftgate can be opened by the power liftgate switch Ⓐ or the power liftgate button Ⓒ even if the liftgate is locked. The liftgate can be unlocked and opened independently of the other doors, even when they are locked. The liftgate must be unlocked (or the Intelligent Key must be within range) to open with the liftgate opener switch Ⓑ.

Power close (using switches)

When the liftgate is fully opened, the liftgate will fully close automatically by:

- pushing the power liftgate switch Ⓐ on the instrument panel for more than 1 second
- pushing the power liftgate button Ⓒ on the key for more than 1 second
- pushing the power liftgate close switch Ⓓ on the lower part of the liftgate

The outside chime sounds when the liftgate starts closing.

Power close and lock

When the liftgate is fully opened and the Intelligent Key is carried with you near the liftgate, all the doors and the liftgate will lock and the liftgate will fully close automatically by pushing the power liftgate lock switch Ⓔ on the lower part of the liftgate.

The outside chime sounds when the liftgate starts closing.

Stop and reverse function (if so equipped)

The power liftgate will stop immediately if one of the following actions is performed during power open or close.

- pushing the power liftgate switch Ⓐ
- pushing the liftgate opener switch Ⓑ
- pushing the power liftgate close switch Ⓓ on the lower part of the liftgate
- pushing the power liftgate button Ⓒ on the key

And then the power liftgate will move in the reverse direction if one of the above actions is performed again.

The outside chime sounds when the liftgate starts to reverse.

Auto reverse function

The auto-reverse function enables the liftgate to automatically reverse when something is caught in the liftgate as it is opening or closing. When the control unit detects an obstacle, the liftgate will reverse and stop.

If a second obstacle is detected, the liftgate motion will stop.

A pinch sensor is mounted on each side of the liftgate. If an obstacle is detected by the pinch sensor during power close, the liftgate will reverse and stop.

NOTE:
If the pinch sensor is damaged or removed, the power close function will not operate.

⚠ WARNING

There is a small distance immediately before the closed position that cannot be detected. Make sure that all passengers keep their hands, etc., clear from the liftgate opening before closing the liftgate.

Manual mode

If power operation is not available, the lift-

gate can be operated manually. Power operation may not be available if the battery voltage is low or if the liftgate is open approximately 5.9 in (150 mm) or less from the fully closed position. When the power liftgate is turned off, the liftgate can be opened manually by pushing the liftgate opener switch. If the power liftgate opener switch is pushed during power open or close, the power operation will be canceled and the liftgate can be operated manually. This will allow normal power operation functions to resume.

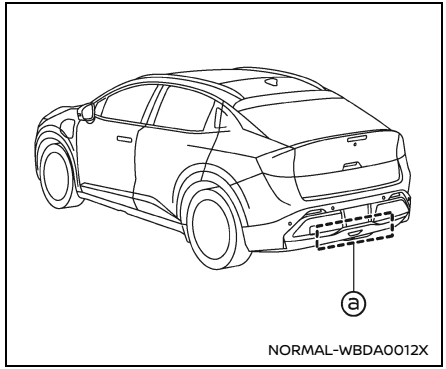

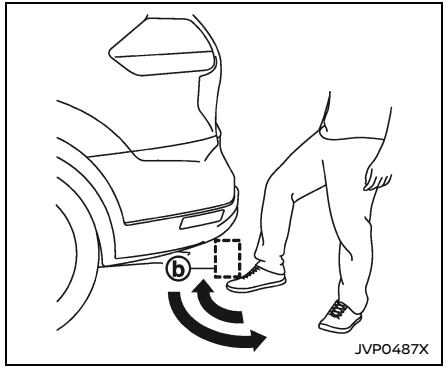

MOTION-ACTIVATED LIFTGATE (if so equipped)

Basic information

The liftgate can be operated using a quick kicking motion under the center of the rear bumper.

The kick motion sensor ⓐ is located on the back of the rear bumper. when you move your foot under and then away from the operating range ⓑ similar to a kicking motion, while carrying the Intelligent Key with you, the liftgate will open or close automatically.

Proper operation technique

- While at the rear of the vehicle, begin making a quick forward kicking motion.
- Raise your foot straight under the center of the rear bumper then immediately return your foot to the ground in a continuous motion.
- You do not need to hold your foot under the bumper or move it side to side. Immediately return your foot to the ground.
- The kicking motion should be straight, smooth and consistent.
- After your kick motion is complete, step back and allow the liftgate to open/close.

- Three beeps will sound and the liftgate will begin moving within 2 seconds after the kick.

⚠ WARNING

Prevent unintentional liftgate opening/closing. There may be conditions when opening/closing the liftgate is not desired. Keep the Intelligent Key out of range of the liftgate, 7 ft (2 m) or more or inside the vehicle, when washing or working around the back of the vehicle.

NOTE:

- **The kick motion sensor may not function under the following conditions:**
  - **When operating near a location where strong radio waves/noises are transmitted, such as a TV tower, power station or broadcasting station.**
  - **When the vehicle is parked near a parking meter.**
- **The power liftgate may not operate when your foot remains in the operating range ⓑ.**

⚠ CAUTION

- **When the Intelligent Key is carried with you near the liftgate, even someone, who does not carry the Intelligent Key, may be able to open or close the liftgate with a kick motion.**
- **Do not perform a kick motion on an unstable place (for example, on a slope or a muddy ground, etc.).**

Power open or close function

The liftgate will fully open automatically using the kick motion sensor.

1. Carry the Intelligent Key.
2. Move your foot under and away from the rear bumper similarly to a kicking motion within the operation range of the kick motion sensor.
3. The liftgate will automatically open or close.

Stop and reverse function

The power liftgate will stop immediately if a kick motion is performed during power open or close. The liftgate can be stopped even if you do not carry the Intelligent Key.

And then the power liftgate will move in the reverse direction if a kick motion is performed again. The power liftgate can be reversed when you carry the Intelligent Key.

GARAGE MODE SYSTEM (if so equipped)

The liftgate can be set to open to a specific height by performing the following:

1. Open the liftgate.
2. Pull the liftgate down to the desired position and hold the liftgate (the liftgate will have some resistance when being manually adjusted).
3. While holding the liftgate in position, press and hold the power liftgate close switch and lock switch located on the liftgate for approximately 3 seconds or until 2 beeps are heard.

The liftgate will open to the selected position setting. To change the position of the liftgate, repeat steps 1-3 for setting the position of the liftgate.

CAUTION

Do not set the height of the liftgate below approximately 1/3 of the way to the floor using garage mode. Even if you set the height below approximately 1/3 of the way to the floor, the height will automatically be set to approximately 1/3 of the way to the floor.

AUTO CLOSURE (if so equipped)

When the liftgate reaches the secondary position, the closure motor engages and pulls the liftgate to its primary latch position.

Do not apply excessive force when the auto closure is operating. Excessive force applied may cause the mechanism to malfunction.

CAUTION

- **The liftgate will automatically close from the secondary position. To avoid pinching, keep hands and fingers away from liftgate opening.**
- **Do not let children operate the liftgate.**

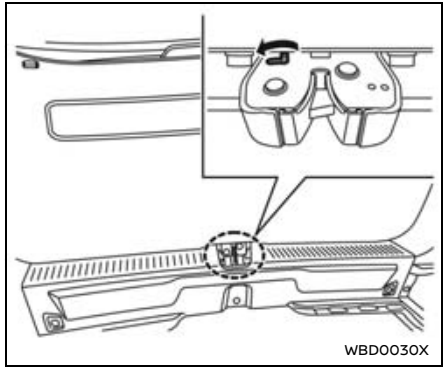

LIFTGATE RELEASE LEVER

If the liftgate cannot be opened with the power door lock switch due to a discharged 12-volt battery, follow these steps.

1. Fold the rear seats down. (See "Rear seats" (P.89).)
2. Insert a suitable tool in the access opening. Move the release lever to the left. The liftgate will be unlatched.
3. Push the liftgate up to open.

It is recommended that you contact a NISSAN certified LEAF dealer as soon as possible for repair.

CHARGE PORT LID

OPENING CHARGE PORT LID

CAUTION

Make sure that the charge port lid is completely closed and latched before driving. Failure to do so could cause the lid to open suddenly during driving.

The charge port lid is linked to the door locking mechanism of the vehicle.

If vehicle doors are locked, the charge port lid will be unlocked when you approach the vehicle with the Intelligent Key.

When you walk away from the vehicle with the Intelligent Key, the charge port lid will be locked automatically.

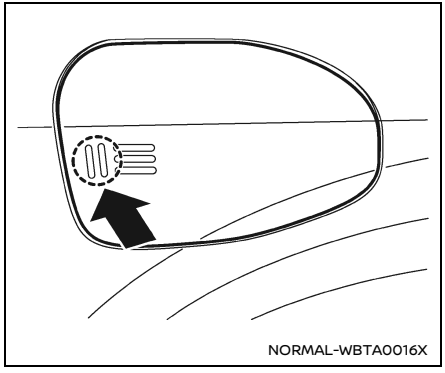

To open the charge port lid, push the rear part of the lid as illustrated when the charge port lid is unlocked.

When closing the charge port lid, push the lid to latch it.

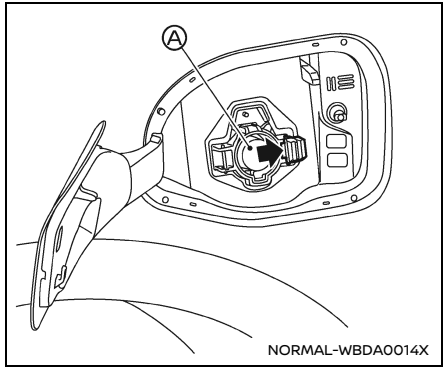

Normal charge

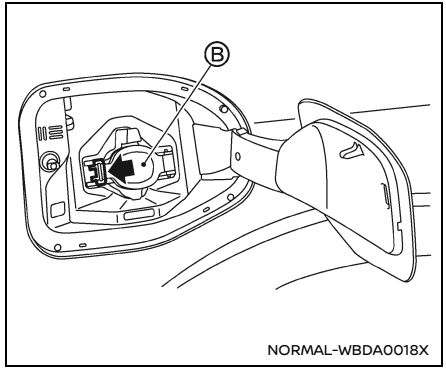

DC Fast Charge

Ⓐ Normal charge

Ⓑ DC Fast Charge

When opening the charge port cap, push the tab and open the cap Ⓐ or Ⓑ.

CHARGE PORT CAP

When the charge port cap is closed to its previous position, it will lock automatically.

⚠ CAUTION

- **When charging is finished, be sure to close the charge port cap. If water or dust gets inside the charge port, this may cause a malfunction.**
- **Pay particular attention when using the normal charge port as the charge port lid can be closed even when the normal charge port cap is open.**
- **Close the DC Fast Charge port cap before closing the charge port lid. The DC Fast Charge port cap can be damaged if it is open when closing the charge port lid.**

- **If the charge port lid is closed after vehicle's door has been locked, the charge port lid is not locked. Be sure that firstly close the lid and then lock the vehicle.**

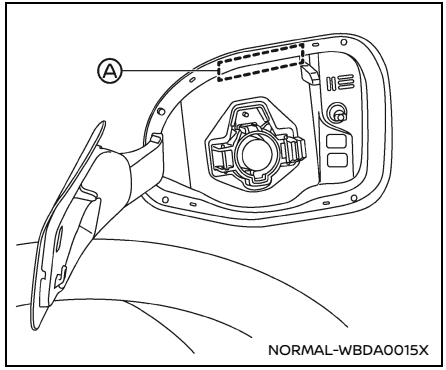

Example

Ⓐ Charge port light

CHARGE PORT LIGHT

Basic information

The charge ports have a light. The charge port light illuminates as follows.

When charging starts

- When you approach the vehicle while the vehicle doors are locked with the Intelligent Key with you or unlock the vehicle, the light illuminates for about 3 minutes.
  - The light will turn off when you walk away from the vehicle with the Intelligent Key.
- When the charge connector is connected, the light turns off for about after 30 seconds.

When charging finished

- When you approach the vehicle while the vehicle doors are locked with the Intelligent Key with you or unlock the vehicle, the light illuminates for about 3 minutes.
  - The light will turn off when you walk away from the vehicle with the Intelligent Key.
- When the charge connector is disconnected, the light illuminates for about 30 seconds.

STEERING WHEEL

BASIC INFORMATION

⚠ WARNING

- **Do not adjust the steering wheel while driving. You could lose control of your vehicle and cause an accident.**
- **Do not adjust the steering wheel any closer to you than is necessary for proper steering operation and comfort. The driver's air bag inflates with great force. If you are unrestrained, leaning forward, sitting sideways or out of position in any way, you are at greater risk of injury or death in a crash. You may also receive serious or fatal injuries from the air bag if you are up against it when it inflates. Always sit back against the seatback and as far away as practical from the steering wheel. Always use the seat belts.**

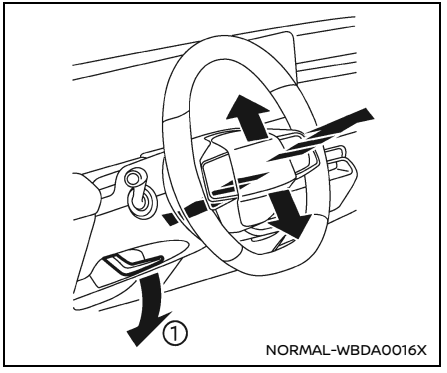

TILT AND TELESCOPIC OPERATION

Pull the lock lever ① down and adjust the steering wheel up, down, forward or rearward to the desired position. Push the lock lever up securely to lock the steering wheel in place.

SUN VISORS

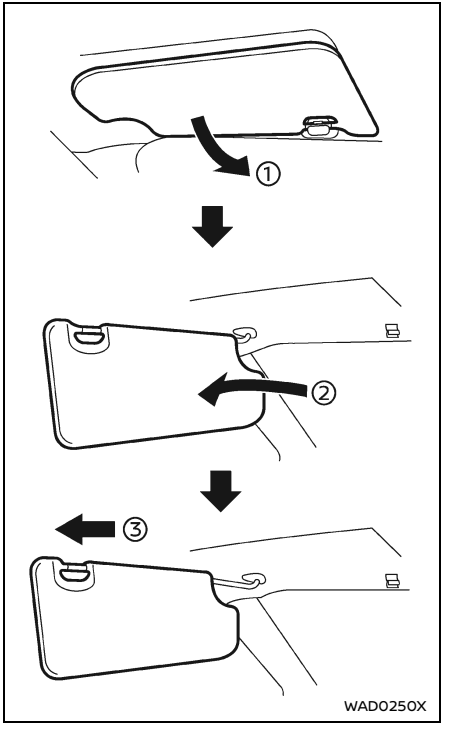

1. To block glare from the front, swing down the main sun visor ①.

2. To block glare from the side, remove the main sun visor from the center mount and swing it to the side ②.
3. Slide the sun visor ③ in or out as needed.

CAUTION

- **Do not store the sun visor before returning the extension to its original position.**
- **Do not pull the extension sun visor forcedly downward.**

ASSIST GRIPS

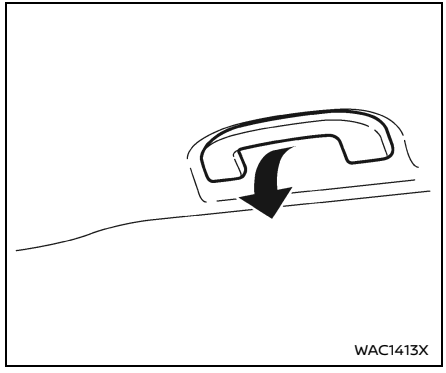

The assist grips are located above the front and rear side windows.

CAUTION

Do not use the assist grip when getting into or out of the vehicle. This may damage the assist grip and cause you to fall.

MIRRORS

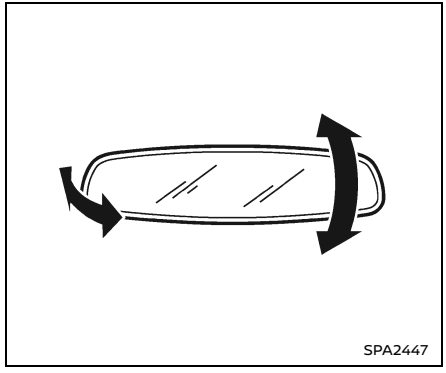

INSIDE MIRROR

Basic information

Adjust the angle of the inside mirror to the desired position.

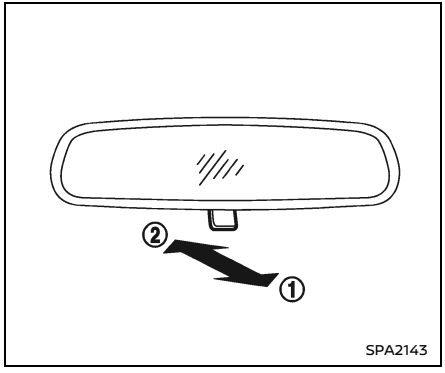

Manual anti-glare type (if so equipped)

The night position ① will reduce glare from the headlights of vehicles behind you at night.

Use the day position ② when driving in daylight hours.

⚠ WARNING

Use the night position only when necessary, because it reduces rear view clarity.

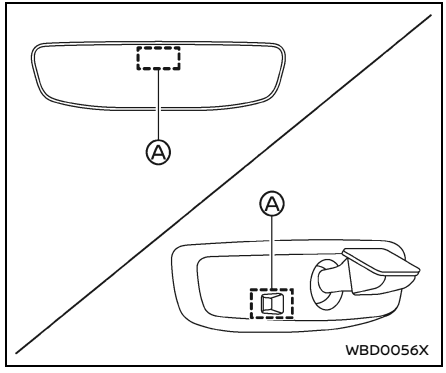

Automatic anti-glare type (if so equipped)

The inside mirror is designed so that it automatically changes reflection according to the intensity of the headlights of the following vehicle.

The anti-glare system will be automatically turned on when the power switch is placed in the ON position.

Do not hang any objects on the mirror or apply glass cleaner. Doing so will reduce the sensitivity of the sensor Ⓐ, resulting in improper operation.

OUTSIDE MIRRORS

Basic information

⚠ WARNING

Objects viewed in the outside mirror on the passenger side are closer than they appear. Be careful when moving to the right. Using only this mirror could cause an accident. Use the inside mirror or glance over your shoulder to properly judge distances to other objects.

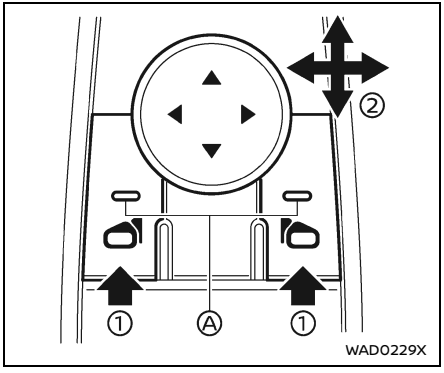

Adjusting outside mirrors

The outside mirror control switch is located on the driver's armrest.

The outside mirror will operate when the power switch is in the ON position.

Push either the right or left switch to select the right or left side mirror ① (the indicator light Ⓐ on the selected mirror switch illuminates), then adjust ② using the control switch.

Defrosting outside mirrors (if so equipped)

The outside mirrors will be heated when the rear window defroster switch is operated. (See "Rear window and outside mirror (if so equipped) defroster switch" (P.215).)

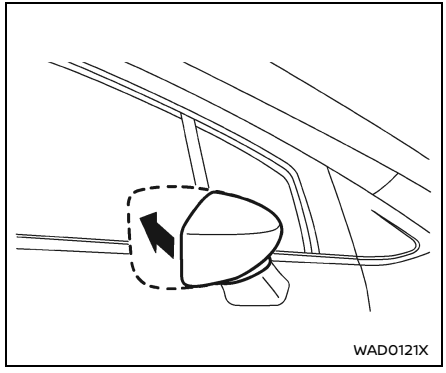

Example

Foldable outside mirrors

Fold the outside mirror by pushing it toward the rear of the vehicle.

Reverse tilt-down feature (if so equipped)

When backing up the vehicle, the outside mirror will turn downward automatically to provide better rear visibility. Depending on the model, the outside mirror on one side (selected) or both sides will move.

1. Place the power switch in the ON position.
2. Select the R (Reverse) position.

3. Choose the right or left outside mirror.
4. The selected outside mirror surface moves downward.

When one of the following conditions has occurred, the outside mirror surface will return to its original position.

- The vehicle is shifted out of the R (Reverse) position for a short period of time when the vehicle speed is lower than 5 MPH (8 km/h).
- The shift position is in any position other than R (Reverse).

To disable the function, make sure that neither the right nor the left outside mirror is selected.

The reverse tilt position can be changed. While in R (Reverse), adjust the glass position to the desired location. The next time the vehicle is shifted into R (Reverse), the glass position will go to the newly set position. Additionally, the changed reverse tilt position can be saved to a memory seat position. After the reverse tilt glass position has been changed, vehicle is shifted back into P (Park) and the glass has returned to the original position, push the SET switch and push the desired memory switch (1 or 2) to assign the new reverse tilt position memory.

(See "Memory seat (if so equipped)" (P.292).)

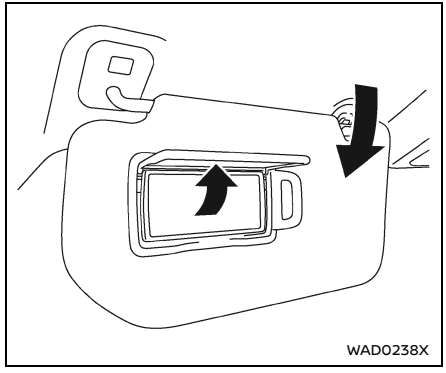

VANITY MIRROR

To use the vanity mirror, pull down the sun visor and pull up the cover.

MEMORY SEAT (if so equipped)

BASIC INFORMATION

The memory seat system has the following features:

- Memory storage function
- Entry/exit function

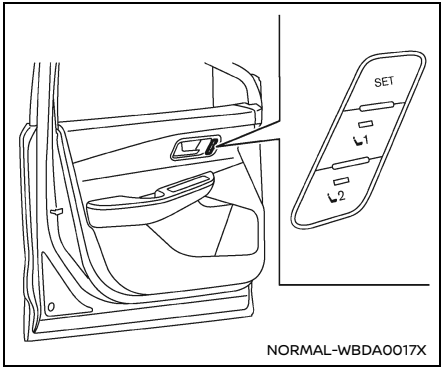

Memory seat switch (driver's side shown; passenger side similar)

MEMORY STORAGE FUNCTION

Basic information

Two positions for the driver's seat and outside mirrors can be stored in the memory switch. Follow these procedures to use the memory system.

1. Adjust the driver's seat and outside mirrors to the desired positions by manually operating each adjusting switch. For additional information, refer to "Seats" (P.85) and "Outside mirrors" (P.290).
2. Push the SET switch and, within 5 seconds, push the memory switch (1 or 2).
3. The indicator light for the pushed memory switch will come on and stay on for approximately 5 seconds.
4. The chime will sound if the memory has been stored.

NOTE:
If a new memory position is stored in the same memory switch, the previous memory position will be overwritten by the new stored position.

Confirming memory storage

Push the SET switch. If a memory position has been stored in the switch (1 or 2) then the indicator light for the respective switch will stay ON for approximately 5 seconds.

Recalling switch memory positions

To recall the manually stored positions, push the memory switch (1 or 2). The driver's seat and the outside mirrors will move to the positions stored in the memory switch.

Linking the profiled user function to a stored memory position

The profiled user function can be linked to a stored memory position with the following procedure.

1. Place the power switch in the ON position while carrying the Intelligent Key that was registered to the vehicle with a user.

NOTE:
Make sure the single Intelligent Key is inside the vehicle. If multiple keys are inside the vehicle, the vehicle may detect a wrong Intelligent Key.

2. Adjust the position of the driver's seat and outside mirrors. (See "Seats" (P.85) and "Outside mirrors" (P.290).)
3. Place the power switch in the OFF position.

The next time you sign in (selecting the user on the display) after placing the power switch in the ON position while carrying the Intelligent Key, the system will automatically adjust to the memorized driving position. (See the separate NissanConnect® Owner's Manual for the profiled user settings.)

ENTRY/EXIT FUNCTION

This system is designed so that the driver's seat will automatically move when the shift position is in the P (Park) position. This allows the driver to get into and out of the driver's seat more easily.

The driver's seat will slide backward:

- When the driver's door is opened with the power switch placed in the OFF position.
- When the power switch is changed from ON to OFF with the driver's door open.

The driver's seat will return to the previous position:

- When the power switch is placed in the ON position while the shift position is in the P (Park) position.

The entry/exit function is disabled by factory default. You can enable the function through "Vehicle Settings" in the vehicle information display by performing the following:

- Switch the "Exit Seat Slide" from OFF to ON. For additional information, refer to "Vehicle Settings" (P.175).

SYSTEM OPERATION

The memory seat system will not work or will stop operating under the following conditions:

- When the vehicle speed is 4 MPH (7 km/h).
- When any of the memory switches are pushed while the memory seat system is operating.
- When the switch for the driver's seat is pushed while the memory seat system is operating.
- When the seat and outside mirrors have already been moved to the memorized position.
- When no seat position is stored in the memory switch.
- When the vehicle is shifted from P (Park) to any other position.

4 Monitor, heater, air conditioner, audio and phone systems

NissanConnect® Owner's Manual 296
Safety precautions 296
Safety information 297
USB memory device, iPod® and Bluetooth® audio player 297
Intelligent Around View® Monitor 298
- Basic information 298
- Intelligent Around View® Monitor system operation 299
- Difference between predictive and actual distances 305
- How to park with predictive course lines 307
- How to switch the display 308
- Adjusting the screen 309
- Setting the vehicle color 310
- Camera widgets 310
- Intelligent Around View® Monitor system limitations 310
- System maintenance 312

Moving Object Detection (MOD) 313
- Basic information 313
- MOD system operation 314
- Turning MOD on and off 315
- MOD system limitations 315
- System maintenance 316

Ventilators 317
- Center ventilators 317
- Side ventilators 317
- Rear ventilators (if so equipped) 318

Heater and air conditioner 318
- Basic information 318
- Automatic air conditioner 319
- Air conditioner settings 322
- Adjusting button sensitivity 323
- Turning the button operation sound on/off 323
- Operating tips 323
- Climate Schedule 324
- Servicing air conditioner 327

Radio antenna 327

NISSANCONNECT® OWNER'S MANUAL

NORMAL-WBEA0002X

QR code (U.S. only)

For models with NissanConnect® System, refer to the digital NissanConnect® Owner's Manual using the QR code on this page (US only), or your printed NissanConnect® Owner's Manual (if so equipped). This manual includes the following information.

Available functions may vary depending on the models and specifications.

- Audio
- Hands-Free Phone
- Apple CarPlay®
- Android Auto™
- NissanConnect® Services powered by SiriusXM®
- Voice Recognition System

SAFETY PRECAUTIONS

WARNING

- **Do not adjust the display controls, heater and air conditioner controls or audio controls while driving so that full attention may be given to vehicle operation.**
- **If you noticed any foreign objects entering the system hardware, spilled liquid on the system, or noticed smoke or fumes coming out from the system, or any other unusual operation is observed, stop using the system immediately and contact the nearest knowledgeable repairer such as a NISSAN certified LEAF dealer. Ignoring such conditions may lead to an accident, fire or electric shock.**
- **Do not disassemble or modify this system. If you do, it may lead to an accident, fire, or electric shock.**

CAUTION

Do not use the system when the electric vehicle system is not engaged for extended periods of time to prevent battery discharge.

SAFETY INFORMATION

WARNING

- **To operate the system, first park the vehicle in a safe location and set the parking brake. Operating the system while driving can distract the driver and may result in a serious accident.**
- **Exercise extreme caution at all times so full attention may be given to vehicle operation. If the system does not respond immediately, please be patient and keep your eyes on the road. Inattentive driving may lead to a crash resulting in serious injuries or death.**
- **Laws in some jurisdictions may restrict the use of some of the applications and features such as "Text-to-Speech", social networking, and texting. Check local regulations for any requirements before using this feature.**

USB MEMORY DEVICE, iPod® AND Bluetooth® AUDIO PLAYER

WARNING

Do not connect, disconnect or operate the USB device while driving. Doing so can be a distraction. If distracted you could lose control of your vehicle and cause an accident or serious injury.

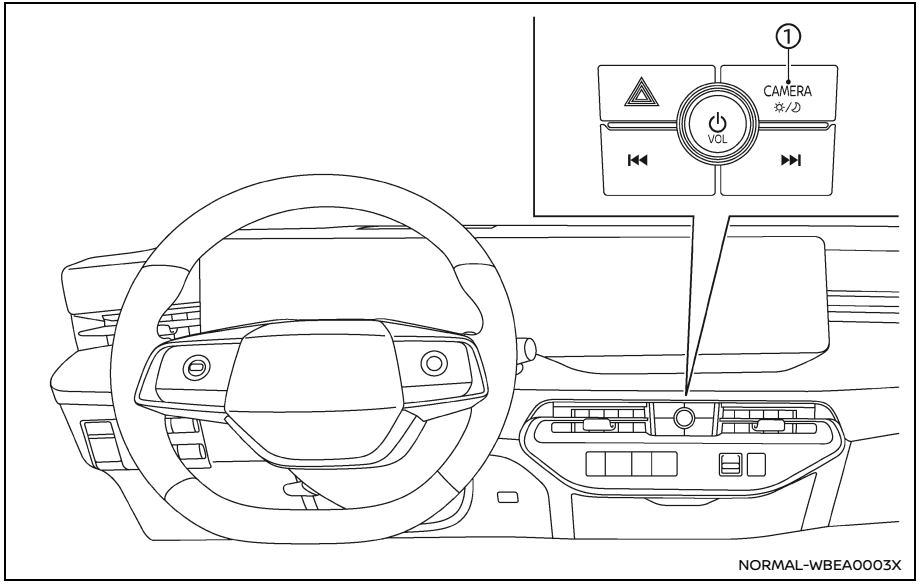

① CAMERA/☼/☽ button

BASIC INFORMATION

⚠ WARNING

- **Failure to follow the warnings and instructions for the proper use of the Intelligent Around View® Monitor system could result in serious injury or death.**
- **The Intelligent Around View® Monitor is a convenience feature and is not a substitute for proper vehicle operation because it has areas where objects cannot be viewed. The four corners of the vehicle in particular, are areas where objects do not always appear in the bird's-eye, front, rear, 3D and Invisible Hood views. Always check your surroundings to be sure that it is safe to move before operating the vehicle. Always operate the vehicle slowly.**
- **The driver is always responsible for safety during parking and other maneuvers.**

CAUTION

Do not scratch the lens when cleaning dirt or snow from the front of the camera.

The Intelligent Around View® Monitor system is designed as an aid to the driver in situations such as slot parking or parallel parking.

The monitor displays various views of the position of the vehicle in a split screen format. Not all views are available at all times.

Available views:

- Front view
  A view of the front of the vehicle
- Rear view
  A view of the rear of the vehicle
- Bird's-eye view
  The surrounding view of the vehicle from above
- Front-side view
  The view around and ahead of the driver's side and the front passenger's side wheel
- Front-wide view
  A wider area view of the front view
- Rear-wide view
  A wider area view of the rear view
- 3D view
  A 360-degree view around the vehicle
- Invisible Hood View
  A view of the front of the vehicle with the transparent motor compartment hood

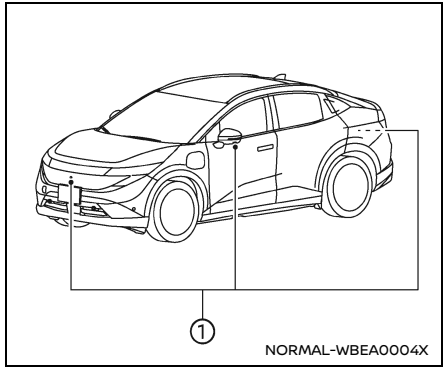

To display the multiple views, the Intelligent Around View® Monitor system uses cameras ① located on the front grille, on the vehicle's outside mirrors and one just above the vehicle's rear license plate.

INTELLIGENT AROUND VIEW® MONITOR SYSTEM OPERATION

Basic information

When the power switch is placed in the ON position, push the CAMERA/☀/☽ button or shift the vehicle in the R (Reverse) position to operate the Intelligent Around View® Monitor.

The screen displayed on the Intelligent

Around View® Monitor will automatically return to the previous screen 3 minutes after the CAMERA/☀/☽ button has been pushed with the vehicle in a position other than the R (Reverse) position.

Available views

WARNING

- **The distance guide lines and the vehicle width guide lines should be used as a reference only when the vehicle is on a paved, level surface. The apparent distance viewed on the monitor may be different than the actual distance between the vehicle and displayed objects.**
- **Use the displayed lines and the bird's-eye view as a reference. The lines and the bird's-eye view are greatly affected by the number of occupants, vehicle position, road condition and road grade.**
- **If the tires are replaced with different sized tires, the predictive course lines and the bird's-eye view may be displayed incorrectly.**
- **When driving the vehicle up a hill, objects viewed in the monitor are farther than they appear. When driving the vehicle down a hill, objects viewed in the monitor are closer than they appear.**
- **Objects in the rear view will appear visually opposite compared to when viewed in the rearview and outside mirrors.**
- **Use the mirrors or actually look to properly judge distances to other objects.**
- **The distance between objects viewed in the rear view differs from actual distance because a wide-angle lens is used.**
- **On a snow-covered or slippery road, there may be a difference between the predictive course line and the actual course line.**
- **The vehicle width and predictive course lines are wider than the actual width and course.**

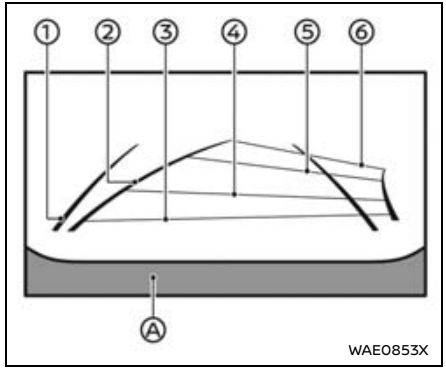

Front view

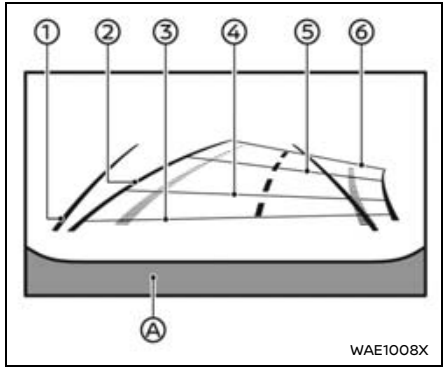

Rear view

Front and rear view:

Guiding lines that indicate the approximate vehicle width and distances to objects with reference to the vehicle body line Ⓐ, are displayed on the monitor.

Vehicle width guide lines ①:

Indicate the vehicle width.

Predictive course lines ②:

Indicate the predictive course when operating the vehicle. The predictive course lines will move depending on how much the steering wheel is turned.

Distance guide lines:

Indicate distances from the vehicle body.

- Red line ③: approximately 1.5 ft (0.5 m)
- Blue line ④: approximately 3 ft (1 m)
- Blue line ⑤: approximately 7 ft (2 m)
- Blue line ⑥: approximately 10 ft (3 m)

The front view will not be displayed when the vehicle speed is above 12 MPH (20 km/h).

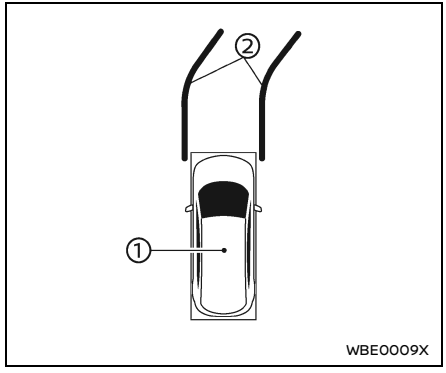

Example

Bird's-eye view:

The bird's-eye view shows the overhead view of the vehicle which helps confirm the vehicle position and the predictive course to a parking space.

The vehicle icon ① shows the position of the vehicle. Note that the distance between objects viewed in the bird's-eye view differs from the actual distance.

The predictive course lines ② indicate the predicted course when operating the vehicle.

⚠ WARNING

- **Objects in the bird's-eye view will appear farther than the actual distance.**
- **Tall objects, such as a curb or vehicle, may be misaligned or not displayed at the seam of the views.**
- **Objects that are above the camera cannot be displayed.**
- **The view for the bird's-eye view may be misaligned when the camera position alters.**
- **A line on the ground may be misaligned and is not seen as being straight at the seam of the views. The misalignment will increase as the line proceeds away from the vehicle.**

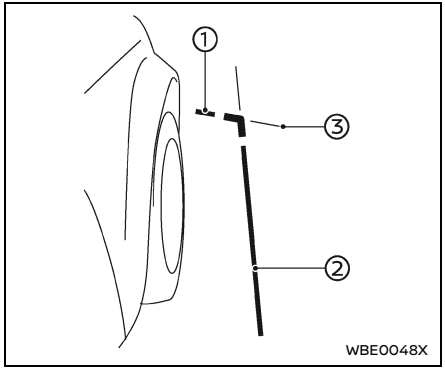

Front passenger's side

Front-side view:

Guiding lines:

Guiding lines that indicate the approximate width and the front end of the vehicle (both the driver's and front passenger's sides) are displayed on the monitor.

The front-of-vehicle line ① shows the front part of the vehicle.

The side-of-vehicle line ② shows the vehicle width including the outside mirrors.

The extensions ③ of both the front ① and side ② lines are shown with a blue line.

CAUTION

The turn signal light may look like the side-of-vehicle line. This is not a malfunction.

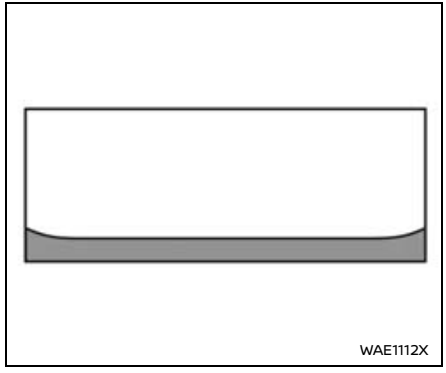

Front-wide view

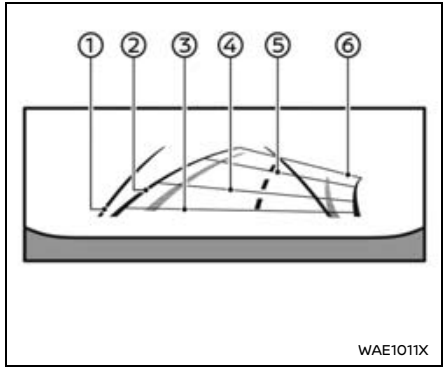

Rear-wide view

Front-wide/rear-wide view:

While the front view/rear view shows a normal view on the split screens, the front-wide view/rear-wide view shows a wider area on the entire screen and allows checking of the blind corners on the right and left sides.

Vehicle width guide lines ①:

Indicate the approximate vehicle width.

Predictive course lines ②:

Indicate the predictive course when operating the vehicle. The predictive course lines will move depending on how much the steering wheel is turned.

Distance guide lines:

Indicate distances from the vehicle body.

- Red line ③: approximately 1.5 ft (0.5 m)
- Blue line ④: approximately 3 ft (1 m)
- Blue line ⑤: approximately 7 ft (2 m)
- Blue line ⑥: approximately 10 ft (3 m)

The front-wide view will not be displayed when the vehicle speed is above 12 MPH (20 km/h).

Saved Locations:

You can save the points where the front-wide view will automatically pop up. This can be useful when the driver needs to check the blind corners at intersections with poor visibility, for example.

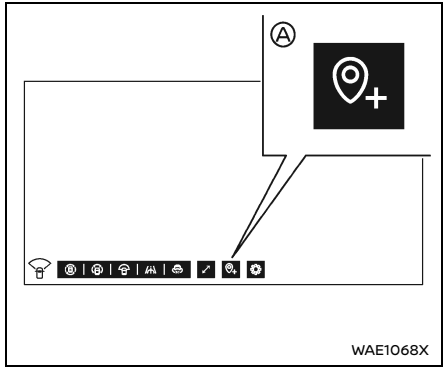

How to save the location:

When the camera screen is displayed, touch Ⓐ key.

See "Camera" (P.204) for more information.

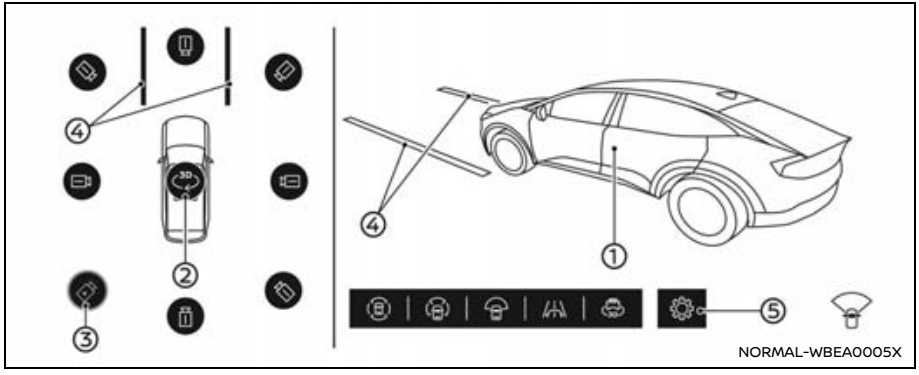

3D view

The 3D view shows the 360-degree view around the vehicle which helps confirm the vehicle position and the predictive course to a parking space.

When touching the rotation icon ②, the vehicle image ① and the surrounding area image will pop up and turn 360° to check the vehicle surroundings.

8 different camera directions can be selected by touching the camera position icon ③.

When the vehicle speed exceeds 10 MPH (16 km/h), the three cameras that are shooting in the direction of travel can only be selected.

The predictive course lines ④ indicate the predicted course when operating the vehicle.

WARNING

- **The distance between objects viewed in the view differs from the actual distance.**
- **There are some areas where the system will not show objects. See "Intelligent Around View® Monitor system limitations" (P.310) for more details.**

Automatic 360° Moving:

When you push the CAMERA/☀/☽ button at the first time after the power switch has been placed in the ON position, the vehicle image and the surrounding area image will pop up and turn 360° automatically (Auto 360° Moving) to check the vehicle surroundings.

How to ON/OFF the Auto 360° Moving feature

When the camera screen is displayed, touch ⚙ key ⑤ to open the "Settings" menu, then select "Automatic 360° Moving" and enable or disable this feature.

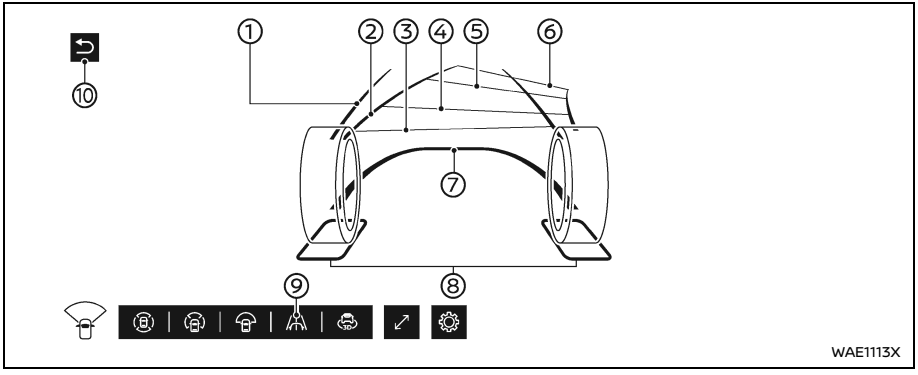

Example

Invisible Hood View

The Invisible Hood View allows user to see the road surface underneath the virtually transparent vehicle body. This may be useful for aligning the front wheels with the rails of the automatic car wash, or help to avoid hitting the side of the vehicle against curbs when operating at low speeds, for example.

NOTE:
The image of the road surface under the body is a composite from the front camera images, and does not actually show the road surface under the vehicle body.

Vehicle width guide lines ①:

Indicate the approximate vehicle width.

Predictive course lines ②:

Indicate the predictive course when operating the vehicle. The predictive course lines will move depending on how much the steering wheel is turned.

Distance guide lines:

Indicate distances from the vehicle body.

- Red line ③: approximately 1.5 ft (0.5 m)
- Blue line ④: approximately 3 ft (1 m)
- Blue line ⑤: approximately 7 ft (2 m)
- Blue line ⑥: approximately 10 ft (3 m)

Vehicle outline ⑦:

Indicates the vehicle outline of the front area.

Wheel area lines ⑧:

Indicate the outlines of the front wheels.

The Invisible Hood View will not be displayed when the vehicle speed is above 12 MPH (20 km/h).

How to ON/OFF the Invisible Hood View:

When the camera screen is displayed, touch ⑨ icon to activate the Invisible Hood View. To deactivate the Invisible Hood View, select other camera view or touch the return key ⑩.

DIFFERENCE BETWEEN PREDICTIVE AND ACTUAL DISTANCES

Basic information

The displayed guide lines and their locations on the ground are for approximate reference only. Objects on uphill or downhill surfaces or projecting objects will be actually located at distances different from those displayed in the monitor relative to the guide lines (refer to illustrations). When in doubt, turn around and view the objects as you are backing up, or park and exit the vehicle to view the positioning of objects behind the vehicle.

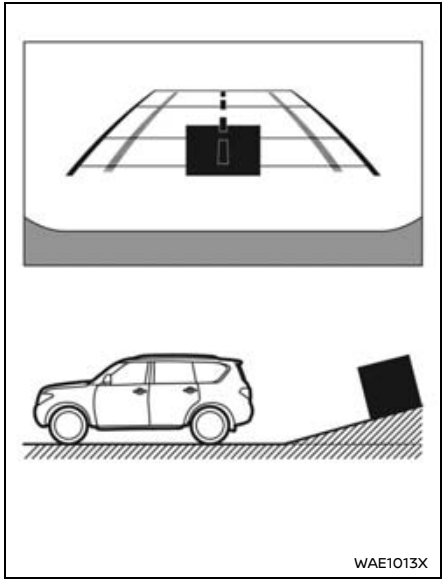

Backing up on a steep uphill

When backing up the vehicle up a hill, the distance guide lines and the vehicle width guide lines are shown closer than the actual distance. Note that any object on the hill is farther than it appears on the monitor.

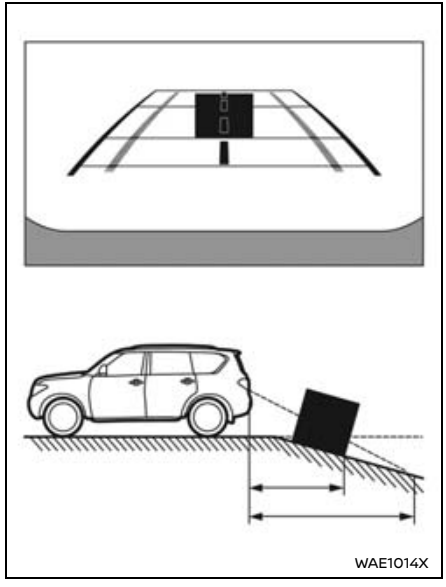

Backing up on a steep downhill

When backing up the vehicle down a hill, the distance guide lines and the vehicle width guide lines are shown farther than the actual distance. Note that any object on the hill is closer than it appears on the monitor.

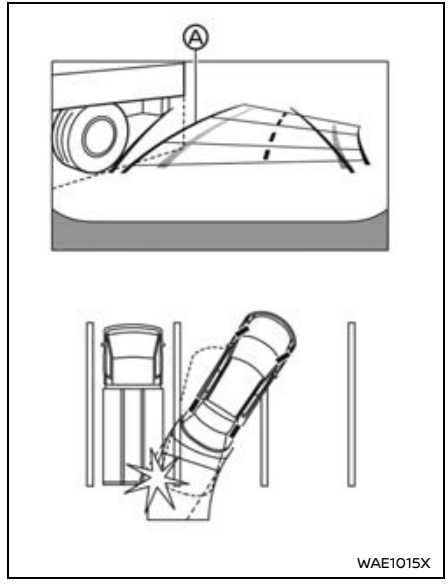

Backing up near a projecting object

The predictive course lines Ⓐ do not touch the object in the display. However, the vehicle may hit the object if it projects over the actual backing up course.

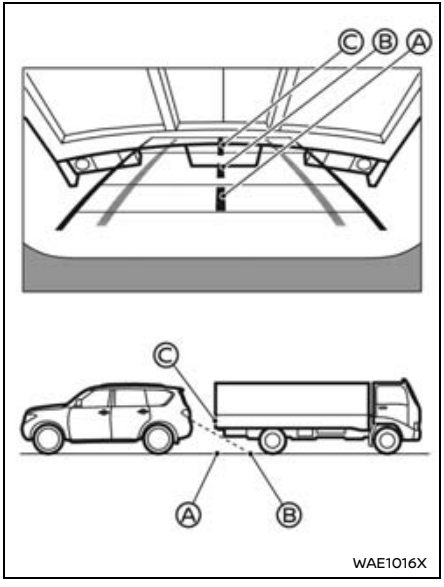

Backing up behind a projecting object

The position Ⓒ is shown farther than the position Ⓑ in the display. However, the position Ⓒ is actually at the same distance as the position Ⓐ. The vehicle may hit the object when backing up to the position Ⓐ if the object projects over the actual moving course.

HOW TO PARK WITH PREDICTIVE COURSE LINES

Basic information

WARNING

- **If the tires are replaced with different sized tires, the predictive course lines may be displayed incorrectly.**
- **On a snow-covered or slippery road, there may be a difference between the predictive course line and the actual course line.**
- **If the battery is disconnected or becomes discharged, the predictive course lines may be displayed incorrectly. If this occurs, please perform the following procedures:**
  - **Turn the steering wheel from lock to lock while the EV system is in the READY to drive position.**
  - **Drive the vehicle on a straight road for more than 5 minutes.**
- **When the steering wheel is turned with the power switch in the ON position, the predictive course lines may be displayed incorrectly.**

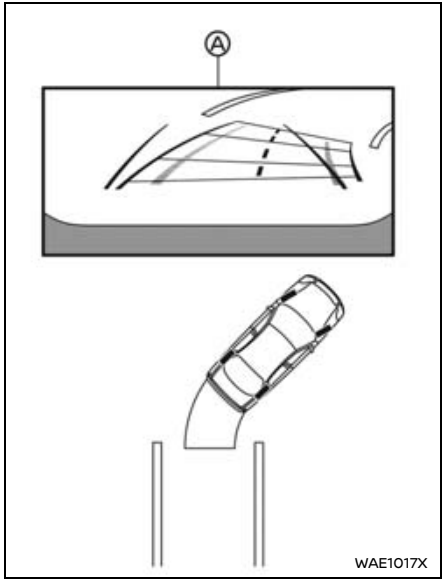

1. Visually check that the parking space is safe before parking your vehicle.
2. The rear view of the vehicle is displayed on the screen Ⓐ when the R (Reverse) position is selected.

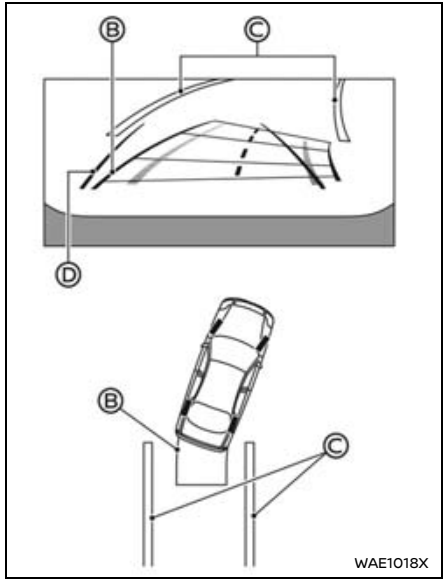

3. Slowly back up the vehicle adjusting the steering wheel so that the predictive course lines Ⓑ enter the parking space Ⓒ.
4. Maneuver the steering wheel to make the vehicle width guide lines Ⓓ parallel to the parking space Ⓒ while referring to the predictive course lines.
5. When the vehicle is parked in the space completely, place the shift position in the P (Park) position and apply the parking brake.

HOW TO SWITCH THE DISPLAY

With the power switch placed in the ON position, push the CAMERA/☀/☽ button or select the R (Reverse) position to operate the Intelligent Around View® Monitor.

The Intelligent Around View® Monitor displays different split screen views depending on the shift position. Push the CAMERA/☀/☽ button or touch the screen icon at the bottom of the display to switch between the available views.

If the vehicle is in the R (Reverse) position, the available views are:

- Rear view/bird's-eye view split screen
- Rear view/front-side view split screen
- Rear-wide view

3D view is not available in the R (Reverse) position.

If the vehicle is out of the R (Reverse) position, the available views are:

- Front view/bird's-eye view split screen
- Front view/front-side view split screen
- Front-wide view
- Invisible Hood View
- 3D view (touch the screen icon)

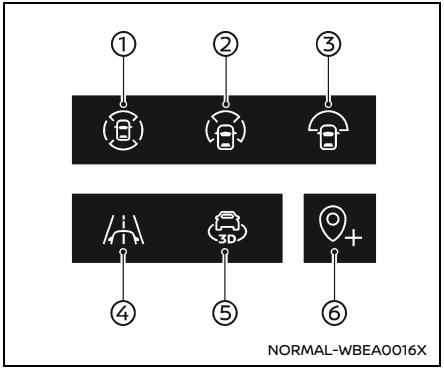

Screen icons (example)

① Bird's-eye view (with front or rear view)

② Front side view* (with front or rear view)

③ Wide view*

④ Invisible Hood View

⑤ 3D view (3D view is not available in the R (Reverse) position)

⑥ Save Location (for front-wide view pop-up)

*: The shape changes when the vehicle is in the R (Reverse) position.

The display will switch from the Intelligent Around View® Monitor screen when:

- The vehicle is in the D (Drive) position and the vehicle speed increases above approximately 12 MPH (20 km/h).
- A different screen is selected.
- 3 minutes have passed without doing any operation.

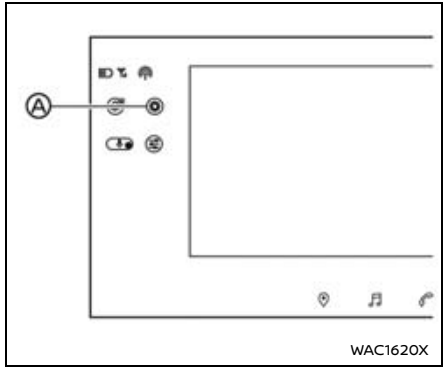

Example

1. Touch " ⚙ " key Ⓐ on the touch screen display.
2. Touch "Vehicle" key.
3. Touch “Camera” key.
4. Touch “Display Settings” key.
5. Touch the “+” or “-” key of the desired item on the touch screen display. You can change the brightness, contrast, tint, color, and black level.

ADJUSTING THE SCREEN

The “Display Settings” key can also be selected directly on the Intelligent Around View® Monitor display by touching " ⚙ " key.

NOTE:
Do not adjust the display settings of the Intelligent Around View® Monitor while the vehicle is moving. Make sure the parking brake is firmly applied.

SETTING THE VEHICLE COLOR

The color of the vehicle shown on the bird's-eye view and the 3D view can be changed. To change the color, perform the following operation.

1. Push the CAMERA/☀/☽ button.
2. Select a view while the vehicle is not in the R (Reverse) position.
3. Touch " ⚙ " key on the touch screen display.
4. Touch the "Vehicle Color" key.
5. Touch the desired color.

CAMERA WIDGETS

The camera-related widgets can be set on the home menu screen of the touch screen display. See the separate NissanConnect® Owner's Manual for more details about customizing the home menu screen.

INTELLIGENT AROUND VIEW® MONITOR SYSTEM LIMITATIONS

Basic information

⚠ WARNING

Listed below are the system limitations for Intelligent Around View® Monitor. Failure to operate the vehicle in accordance with these system limitations could result in serious injury or death.

- **Do not use the Intelligent Around View® Monitor with the outside mirrors in the stored position, and make sure that the liftgate is securely closed when operating the vehicle using the Intelligent Around View® Monitor.**
- **The apparent distance between objects viewed on the Intelligent Around View® Monitor differs from the actual distance.**
- **The cameras are installed on the front grille, the outside mirrors and above the rear license plate. Do not put anything on the cameras.**
- **When washing the vehicle with high pressure water, be sure not to spray it around the cameras. Otherwise, water may enter the camera unit causing water condensation on the lens, a malfunction, fire or an electric shock.**
- **Do not strike the cameras. They are precision instruments. Doing so could cause a malfunction or cause damage resulting in a fire or an electric shock.**

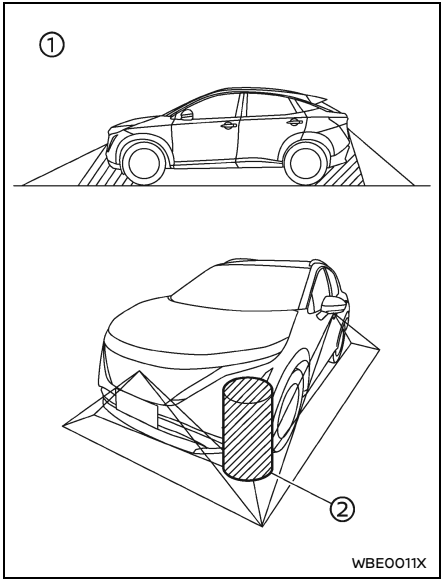

There are some areas where the system will not show objects and the system does not warn of moving objects. When in the front or the rear view display, an object below the bumper or on the ground may not be viewed ①. When in the bird's-eye view, a tall object near the seam ② of the camera viewing areas will not appear in the monitor.

The following are operating limitations and do not represent a system malfunction:

- There may be a delay when switching between views.
- When the temperature is extremely high or low, the screen may not display objects clearly.
- When strong light directly shines on the camera, objects may not be displayed clearly.
- The screen may flicker under fluorescent light.
- The colors of objects on the Intelligent Around View® Monitor may differ somewhat from the actual color of objects.
- Objects on the Intelligent Around View® Monitor may not be clear and the color of the object may differ in a dark environment.
- There may be differences in sharpness between each camera view of the bird's-eye view.
- Do not use wax on the camera lens. Wipe off any wax with a clean cloth that has been dampened with a diluted mild cleaning agent, then wipe with a dry cloth.

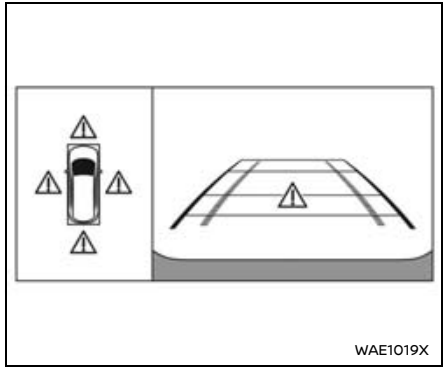

System temporarily unavailable

When the "⚠" icon is displayed on the screen, there will be abnormal conditions in the Intelligent Around View® Monitor. This will not hinder normal driving operation but the system should be inspected. It is recommended you visit a NISSAN certified LEAF dealer.

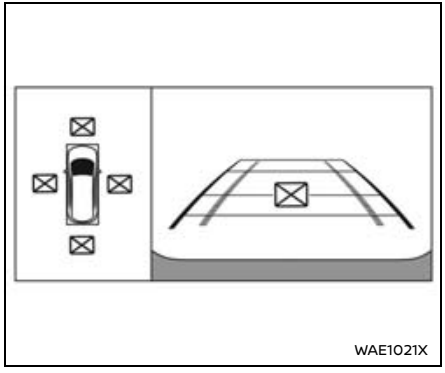

When the "⊠" icon is displayed on the screen, the camera image may be receiving temporary electronic disturbances from surrounding devices. This will not hinder normal driving operation but the system should be inspected. It is recommended you visit a NISSAN certified LEAF dealer.

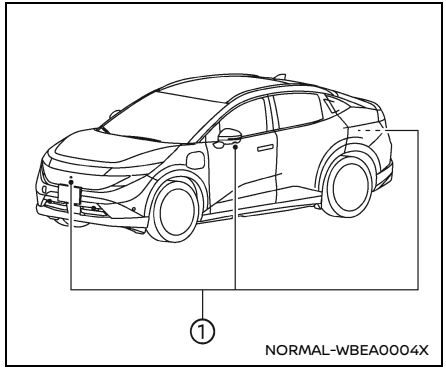

SYSTEM MAINTENANCE

⚠ CAUTION

- **Do not use alcohol, benzine or thinner to clean the camera. This will cause discoloration.**
- **Do not damage the camera as the monitor screen may be adversely affected.**

If dirt, rain or snow accumulates on any of the cameras ①, the Intelligent Around View® Monitor may not display objects clearly. Clean the camera by wiping with a cloth dampened with a diluted mild cleaning agent and then wiping with a dry cloth.

MOVING OBJECT DETECTION (MOD)

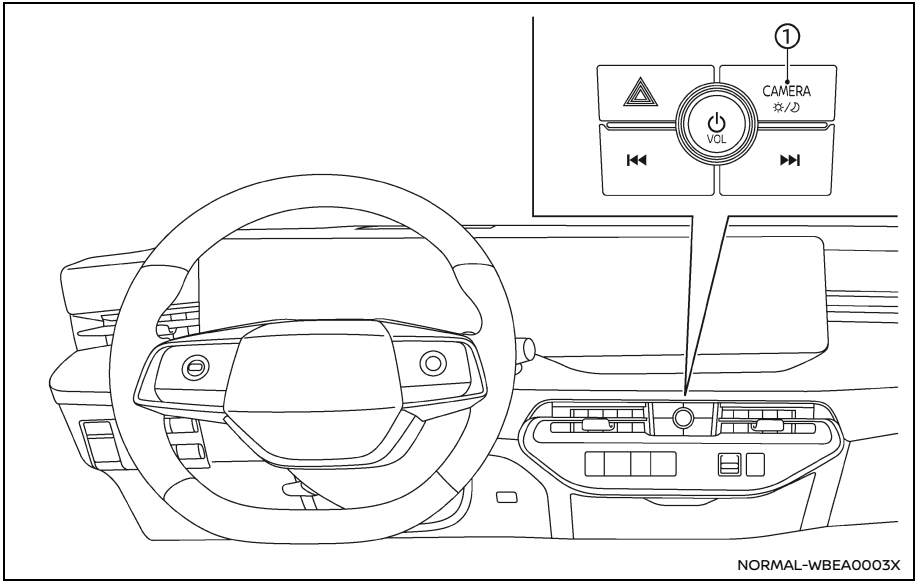

① CAMERA/☀/☽ button

BASIC INFORMATION

⚠ WARNING

- **Failure to follow the warnings and instructions for proper use of the Moving Object Detection system could result in serious injury or death.**
- **The MOD system is not a substitute for proper vehicle operation and is not designed to prevent contact with objects surrounding the vehicle. When maneuvering, always use the outside mirrors and rearview mirror and turn and check the surroundings to ensure it is safe to maneuver.**
- **The system is deactivated at speeds above 5 MPH (8 km/h). It is reactivated at lower speeds.**
- **The MOD system is not designed to detect the surrounding stationary objects.**

The MOD system can inform the driver of moving objects near the vehicle when driving out of garages, maneuvering in parking lots and in other such instances.

The MOD system detects moving objects by using image processing technology on

the image shown in the display.

MOD SYSTEM OPERATION

The MOD system will turn on automatically under the following conditions:

- When the vehicle is in the R (Reverse) position.
- When the CAMERA/☀/☽ button is pushed to activate the Intelligent Around View® Monitor system on the display.
- When vehicle speed decreases below approximately 5 MPH (8 km/h).

The MOD system operates in the following conditions when the camera view is displayed:

- When the vehicle is in the P (Park) or N (Neutral) position and the vehicle is stopped, the MOD system detects the moving objects in the bird's-eye view. The MOD system will not operate if either door is opened. If outside mirrors are folded, MOD may not operate properly.
- When the vehicle is in the D (Drive) position, and the vehicle speed is below approximately 5 MPH (8 km/h), the MOD system detects moving objects in the front view, front-wide view or Invisible Hood View.
- When the vehicle is in the R (Reverse) position and the vehicle speed is below approximately 5 MPH (8 km/h), the MOD system detects moving objects in the rear view or rear-wide view. The MOD system will not operate if the liftgate is open.

The MOD system does not detect moving objects in the front-side view and the 3D view. The MOD icon is not displayed on the screen when in these views (depending on models).

When the MOD system detects a moving object near the vehicle, the orange frame will be displayed on the view where the object is detected and a chime will sound once. While the MOD system continues to detect moving objects, the orange frame continues to be displayed.

NOTE:
While the RCTA chime is beeping, the MOD system does not chime.

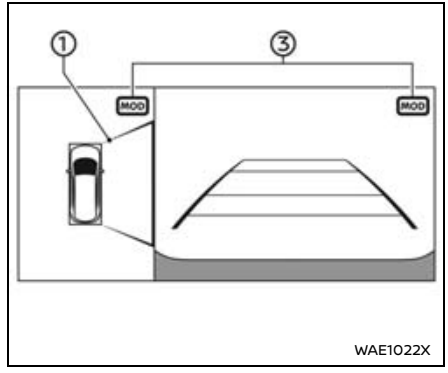

Front and bird's-eye views

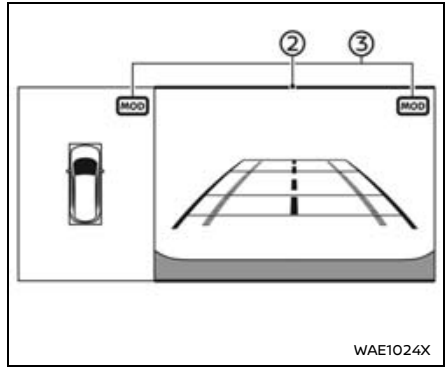

Rear and bird's-eye views

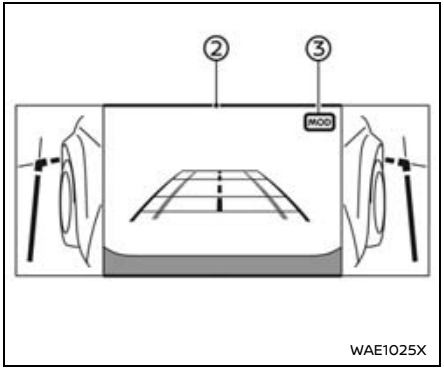

Rear and front-side views

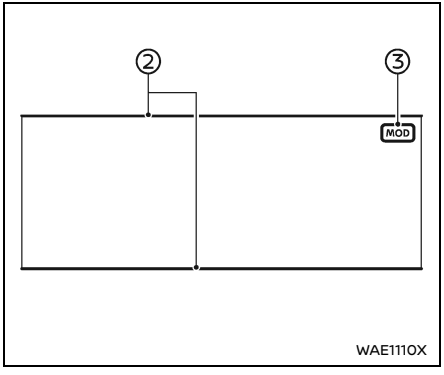

Front-wide view

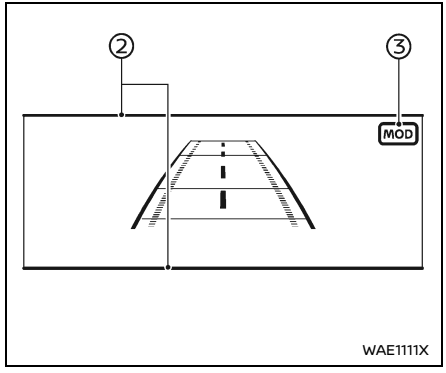

Rear-wide view

In the bird's-eye view, the orange frame ① is displayed on each camera image (front, rear, right, left) depending on where moving objects are detected.

The orange frame ② is displayed on the front view, rear view, front-wide view, Invisible Hood View and rear-wide view.

A green MOD icon ③ is displayed in the view where the MOD system is operative. A gray MOD icon ③ is displayed in the view where the MOD system is not operative.

If the MOD system is turned off, the MOD icon ③ is not displayed.

TURNING MOD ON AND OFF

The MOD system can be turned on and off using the vehicle information display. (See "Driver Assistance" (P.173).)

MOD SYSTEM LIMITATIONS

⚠ WARNING

Listed below are the system limitations for MOD. Failure to operate the vehicle in accordance with these system limitations could result in serious injury or death.

- **Excessive noise (for example, audio system volume or open vehicle window) will interfere with the chime sound, and it may not be heard.**
- **The MOD system performance will be limited according to environmental conditions and surrounding objects such as:**
  - **When there is low contrast between background and the moving objects.**
  - **When there is blinking source of light.**
  - **When strong light such as another vehicle's headlight or sunlight is present.**

- When camera orientation is not in its usual position, such as when the outside mirror is folded.
- When there is dirt, water drops or snow on the camera lens.
- When the position of the moving objects in the display is not changed.

- The MOD system might detect flowing water droplets on the camera lens, white smoke from the muffler, moving shadows, etc.
- The MOD system may not function properly depending on the speed, direction, distance or shape of the moving objects.
- If your vehicle sustains damage to the parts where the camera is installed, leaving it misaligned or bent, the sensing zone may be altered and the MOD system may not detect objects properly.
- When the temperature is extremely high or low, the screen may not display objects clearly. This is not a malfunction.

NOTE:
The green MOD icon will change to orange if one of the following has occurred.

- **When the system is malfunctioning.**
- **When the component temperature reaches a high level.**
- **When the rear view camera has detected a blockage.**

If the icon light continues to illuminate in orange, have the MOD system checked. It is recommended that you visit a NISSAN certified LEAF dealer for this service.

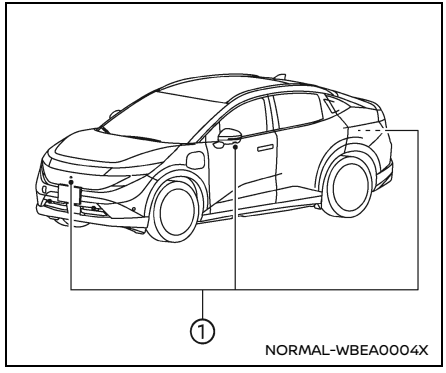

SYSTEM MAINTENANCE

CAUTION

- **Do not use alcohol, benzine or thinner to clean the camera. This will cause discoloration.**
- **Do not damage the camera as the monitor screen may be adversely affected.**

If dirt, rain or snow accumulates on any of the cameras ①, the MOD system may not operate properly. Clean the camera by wiping with a cloth dampened with a diluted mild cleaning agent and then wip-

ing with a dry cloth.

VENTILATORS

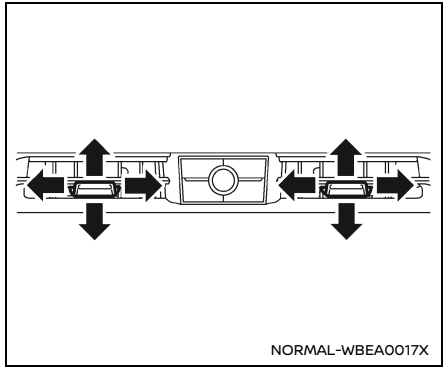

CENTER VENTILATORS

Open or close the vents, and adjust the air flow direction of the ventilators by moving the center knob as illustrated.

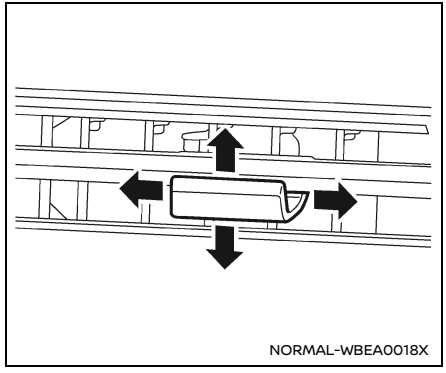

Right side

SIDE VENTILATORS

Open or close the vents, and adjust the air flow direction of the ventilators by moving the center knob as illustrated.

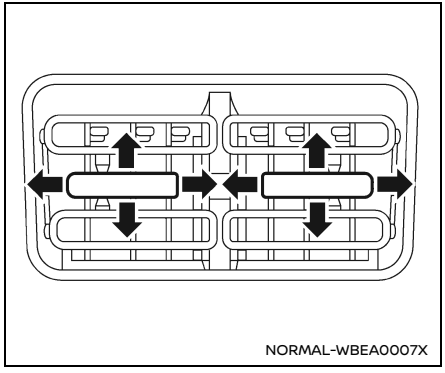

REAR VENTILATORS (if so equipped)

Open or close the vents, and adjust the air flow direction of the ventilators by moving the center knob as illustrated.

BASIC INFORMATION

WARNING

- **The air conditioning cooling function operates only when the power switch is in the ON position or when the READY to drive indicator light is illuminated.**
- **Never leave children or adults who would normally require the support of others alone in the vehicle. Pets should not be left alone either.**

  They could unknowingly activate switches or controls and inadvertently become involved in a serious accident and injure themselves. On hot, sunny days, temperatures in a closed vehicle could quickly become high enough to cause severe or possibly fatal injuries to people or animals.
- **Do not use the recirculation mode for long periods as it may cause the interior air to become stale and the windows to fog up.**
- **Do not adjust the heating and air conditioning controls while driving so that full attention may be given to vehicle operation.**

NOTE:

- **Odors from inside and outside the vehicle can build up in the air conditioner unit. Odor can enter the passenger compartment through the ventilators.**
- **When parking, set the heater and air conditioner controls to turn off air recirculation to allow fresh air into the passenger compartment. This should help reduce odors inside the vehicle.**

The heater and air conditioner operate when the READY to drive indicator light is illuminated. However, while charging, the heater and air conditioner can be used when the power switch is in the ON position.

The fan, heater and air conditioning can be turned on automatically using the timer function or the remote climate control function (if so equipped).

These functions operate in the following conditions.

Power switch position	OFF
Fan	-
Heater and air conditioner	-
Timer (Climate Schedule)	X
Remote climate control (if so equipped)	X

Power switch position	Auto ACC
Fan	-
Heater and air conditioner	-
Timer (Climate Schedule)	X
Remote climate control (if so equipped)	X

Power switch position	ON
Fan	X
Heater and air conditioner	X
Timer (Climate Schedule)	-
Remote climate control (if so equipped)	-

Power switch position	READY to drive
Fan	X
Heater and air conditioner	X
Timer (Climate Schedule)	-
Remote climate control (if so equipped)	-

X: Available

NOTE:

- **A series of operation sounds may be heard immediately after heater and air conditioner system ON/OFF operation. This is not a malfunction.**
- **Condensation forms inside the heater and air conditioner system unit when the heater and air conditioner system is running, and is safely discharged underneath your vehicle. Traces of water on the ground are therefore normal.**
- **Compressor and motor fan may suddenly start to operate during charging operation. This is not a malfunction.**

AUTOMATIC AIR CONDITIONER

Basic information

You can use either buttons on the instrument panel or keys on the climate control screen to control the automatic air conditioner.

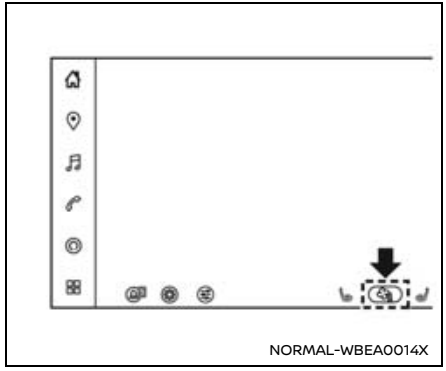

Example

To display the climate control screen, touch the "" key on the touch screen display.

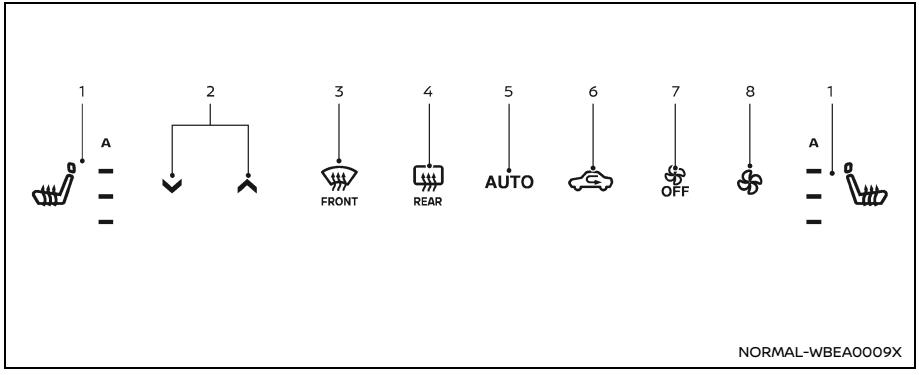

Buttons on the instrument panel

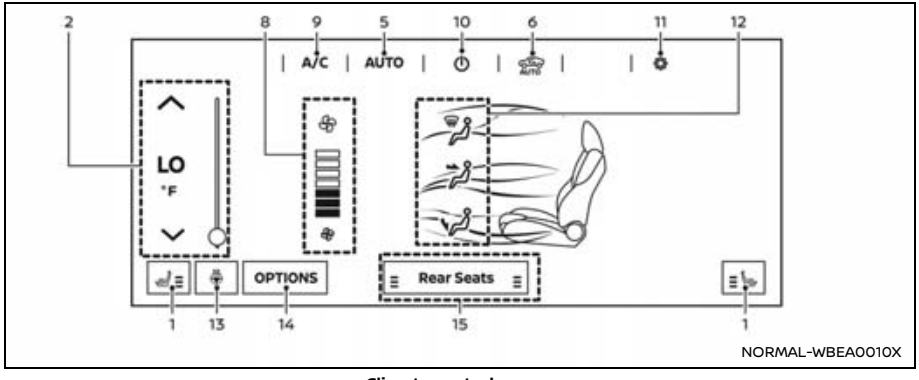

Climate control screen

1. Heated seat buttons/keys (if so equipped) (See "Heated seats (if so equipped)" (P.225).)
2. Temperature control button/temperature control key
3. (front defroster) button
4. (rear window defroster) button
   (See "Rear window and outside mirror (if so equipped) defroster switch" (P.215).)
5. AUTO (automatic) button/"AUTO" (automatic) key
6. Air intake control button/key
7. Fan speed control button/OFF button
   Push once to minimize the airflow, push twice to stop the airflow.
8. Fan speed control button/fan speed control key
9. "A/C" (air conditioner) key
10. ON·OFF key
11. Air conditioner settings key
12. Air flow control key
13. Heated steering wheel key (if so equipped) (See "Heated steering wheel (if so equipped)" (P.223).)
14. OPTIONS key (See "OPTIONS" (P.321).)

15. Rear Seats key (if so equipped) (See "Heated seats (if so equipped)" (P.225).)

CAUTION

Do not put anything in front of the buttons on the instrument panel. Unintended operation of the buttons may occur.

OPTIONS

Touch "OPTIONS" key on the climate control screen to display the air conditioner options.

DRIVER ONLY:

When this item is active, airflow is redirected thorough the driver's ventilators.

FAN ONLY:

The air conditioner does not activate in this mode. Use this mode when you only need ventilation.

NOTE:
The ventilation mode requires a lower power consumption, so driving range will increase.

Automatic operation

Heating and dehumidified cooling (AUTO):

This mode may be used all year round as the system automatically works to keep a constant temperature. Air flow distribution, fan speed are also controlled automatically.

Depending on the settings, heated seats (if so equipped), heated steering wheel (if so equipped) can also be controlled. (See "Air conditioner settings" (P.322).)

1. Use the AUTO button or key to turn on the heater and air conditioner in automatic mode. (The color of the button (indicator) and key will turn orange.)
2. Adjust the temperature by using the temperature control button or key, or sliding bar on the climate control screen.

NOTE:

- **A visible mist may be seen coming from the ventilators in hot, humid conditions as the air is cooled rapidly. This does not indicate a malfunction.**
- **To save power, use the automatic mode or the ventilation mode. While the AUTO button and key turning orange, electric power consumption of the air conditioner system can have a better efficiency compared to the amount consumed with the AUTO button and key turning white. While ventilation mode is activated, outside air is drawn into the cabin using the fans with no heating or cooling applied. This significantly reduces energy consumption.**

Heating (A/C OFF):

The air conditioner does not activate in this mode. Use this mode when you only need to heat.

1. Use the AUTO button or key to turn on the heater and air conditioner in automatic mode. (The color of the button (indicator) and key will turn orange.)
2. Touch the "A/C" key. (The color of the key will turn white.)
3. Use the temperature control button or key to set the desired temperature.

   The temperature of the passenger compartment will be maintained automatically. Air flow distribution and fan speed are also controlled automatically.

NOTE:
It is not recommended to use this mode if windows fog up.

Dehumidified defrosting or defogging:

1. Push the button. (The color of the button (indicator) will turn orange.)
2. Use the temperature control button or key to set the desired temperature.
   - To quickly remove ice from the outside of the windows, use the fan speed control button or key to set the fan speed to maximum.
   - As soon as possible after the windshield is clean, use the AUTO button or key to return to the automatic mode.
   - When the button is pushed, the air conditioner will automatically be turned on at outside temperatures more than slightly above freezing. The air recirculation mode automatically turns off, allowing outside air to be drawn into the passenger compartment to further improve the defogging performance.

Manual operation

Fan speed control:

Use the fan speed control buttons or keys to manually control the fan speed.

Air intake control:

The air intake control mode will change each time the air intake control button or key is pushed or touched.

- When the air recirculates inside the vehicle, the color of the air intake control button (indicator) and key are orange.
- When the air flow is drawn from outside the vehicle, the color of the air intake control button and key are white.
- When the " AUTO " icon is displayed in the climate control screen, the air intake will be controlled automatically.
- When the power switch is placed in the ON position, the air conditioning system may change to air recirculation mode automatically to increase cooling efficiency.

Air flow control:

Touching the air flow control key manually controls air flow and selects the air outlet:

—	Air flows mainly from the defroster
—	Air flows mainly from center and side ventilators.
—	Air flows mainly from the foot outlet and partly from the defroster.

You can also choose to have two or all three air flow control keys.

To stop the air flow, push the Fan speed control button/OFF button twice.

NOTE:

- **The air flow volume from each air outlet can be customized. Please contact a NISSAN certified LEAF dealer for more information.**
- **When you select air flow from the defroster or foot outlet, a small amount of air still come out of the side ventilators to reduce the cold air near the windows.**

To turn the system off

Push the OFF button or touch the ON·OFF key. The color of the button (indicator) and key will turn white.

AIR CONDITIONER SETTINGS

Touch the key on the climate control screen to change the air conditioner settings.

Available settings:

- **Heated Steering Wheel Sensitivity (if so equipped)**

  The temperature control sensitivity level of the heated steering wheel for

automatic control mode can be changed from 1 (low) to 3 (high).

See "Heated steering wheel (if so equipped)" (P.223).

While the setting is "OFF", the function will not be activated when using the automatic air conditioner.

- **Driver Auto Seat Sensitivity (if so equipped)**

  The temperature control sensitivity level of the driver's side of the heated seat for automatic control mode can be changed from 1 (low) to 3 (high).

  See "Heated seats (if so equipped)" (P.225).

  While the setting is "OFF", the function will not be activated when using the automatic air conditioner.

- **Passenger Auto Seat Sensitivity (if so equipped)**

  The temperature control sensitivity level of the passenger's side of the heated seat for automatic control mode can be changed from 1 (low) to 3 (high).

  See "Heated seats (if so equipped)" (P.225).

  While the setting is "OFF", the function will not be activated when using the automatic air conditioner.

ADJUSTING BUTTON SENSITIVITY

The sensitivity of the buttons on the instrument panel can be changed. It is recommended you consult a NISSAN certified LEAF dealer for this service.

TURNING THE BUTTON OPERATION SOUND ON/OFF

The button operation sound can be turned on/off. Follow the steps below to turn the button sounds on/off.

1. Turn the power switch ON, then OFF to set the system to AUTO ACC.

   (See "Power switch operation" (P.340).)

2. Push the air intake control button "" for longer then 5 seconds to activate the button operation sound on/off mode.
3. Push the air intake control button "" again to turn on/off the button operation sound.
   - Sound ON to OFF: All symbols flash.
   - Sound OFF to ON: All symbols illuminate and a sound is heard.

If no operation is performed for 5 seconds, the button operation sound on/off mode will end.

OPERATING TIPS

- Using the automatic mode will help reduce the power consumption of the air conditioner.
- When the AUTO button or key is used, the color of the button (indicator) and key will turn orange. The color of the "A/C" key also turns orange.
- When the fan speed control button or key, or air flow control keys are used while the AUTO mode is turned on, the corresponding function will change to manual operation mode. At this time, functions other than the operated function will keep the automatic mode.
- Power consumption of the heater and air conditioner system varies depending on the outside temperature and the temperature set for the heater and air conditioner system. Power consumption increases if the interior temperature is cooled down too much in summer or if it is warmed up too much in winter. This will result in a reduced driving range.
- The Climate Schedule or the remote climate control (if so equipped) may fog up windows depending on the set temperature or outside temperature.

- When the Climate Schedule or the remote climate control (if so equipped) is operating, the heated seat (if so equipped) and the heated steering wheel (if so equipped) may turn on automatically.
- Even when the air conditioner is off, the air conditioner may turn on automatically to cool the Li-ion battery. In this case, a noise from compressor and cooling fan may be heard. This is not a malfunction.
- When the Climate Schedule or the remote climate control (if so equipped) is operating, a noise from compressor and cooling fan may be heard. This is not a malfunction. When the temperature control system of the Li-ion battery uses power from the Li-ion battery, the air conditioner turns on automatically. This is not a malfunction.

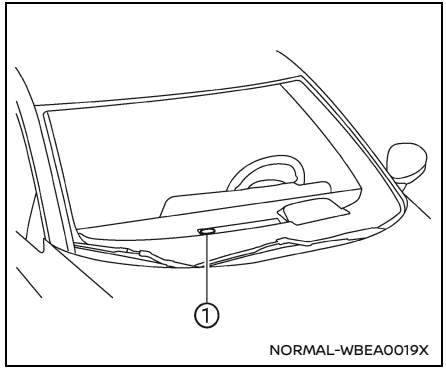

Example

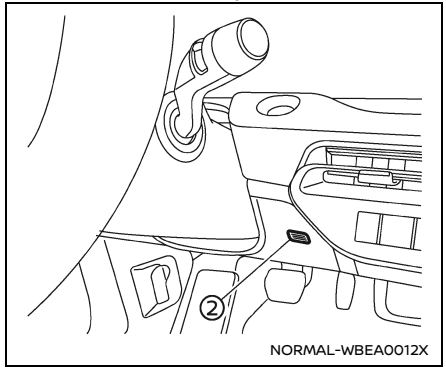

Sensors:

The sensors ① and ② located on the instrument panel, help maintain a constant temperature. Do not put anything on or around the sensors.

CLIMATE SCHEDULE

Basic information

This function pre-heats or pre-cools the passenger compartment of the vehicle to the preferred temperature before driving. This helps reduce power consumption from the Li-ion battery while driving.

The Climate Schedule operates the heater and air conditioner system using power from the charger or the Li-ion battery.

The Climate Schedule function allows four timer settings.

Once the Climate Schedule is set, it will complete air conditioning by the time that is set. It is not necessary to set the Climate Schedule everyday.

The Climate Schedule function will not operate when the remaining capacity of the Li-ion battery is low.

WARNING

Even if the Climate Schedule is set, the temperature in the passenger compartment may become high or low if the system automatically stops. Do not leave children or adults who would normally require the support of others alone in your vehicle. Pets should not be left alone either. On hot, sunny days, temperatures in a closed vehicle could quickly become high enough to cause severe or possibly fatal injuries to people or animals. Also on cold days, temperature in a vehicle could become low enough to cause sever or possible fatal injuries to people or animals.

How to set Climate Schedule

The Climate Schedule settings can be changed with the touch screen display.

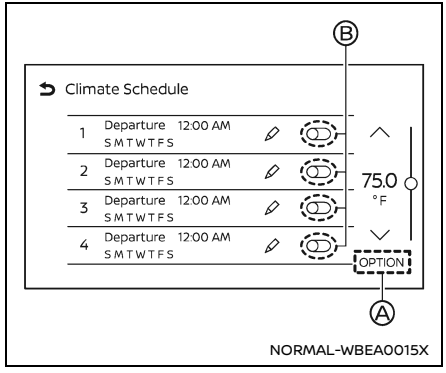

1. Touch the " ⌂ " key on the touch screen display.
2. Touch the " ⊞ " key and then touch "Electric Vehicle" key.
3. Touch the "Climate Schedule" key. Climate Schedule screen is displayed.

   Available setting items:

   - Temperature
     Touch the temperature control key to adjust the temperature.
   - Timer settings
     Touch Ⓑ to turn on/off the timer. The indicator light will turn on when the timer setting is turned on.
   - "✎" key
     Touch to display the Climate Schedule setting screen. Set preferred time and day of the week for Climate Schedule activation.
4. After completing the settings, place the power switch in the OFF position, and then connect the charge connector to the vehicle.

Touch "OPTION" Ⓐ to set the ECO Climate Schedule.

When this setting is on, only the heated steering wheel (if so equipped) and heated seats (if so equipped) will be used with the climate schedule. This allows less use of the battery for climate schedules.

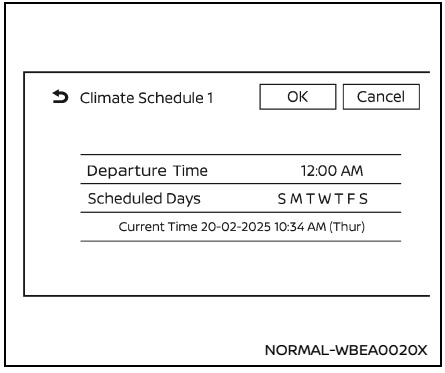

Example

Climate Schedule setting screen:

1. Touch "Departure Time" key to set the departure time.
2. Touch "Scheduled Days" key and select the days of the week you wish to activate the Climate Schedule.
3. Touch "OK" key to save the setting.

NOTE:
The Climate Schedule operates repeatedly once it is turned on.

Operating tips for using Climate Schedule:

- The Climate Schedule will only start when the power switch is in the OFF or Auto ACC position.
- To turn off the Climate Schedule function, touch Ⓑ key to turn the indicator light off. The departure time settings will not be deleted even if the Climate Schedule function is turned off.
- If the Climate Schedule starts operating while the vehicle is being charged, the time required for charging will be longer.
- Operating the Climate Schedule in an environment where the temperature is low may decrease the rate of battery charge.
- Timer setting can also be changed while Climate Schedule is operated. When the power switch is in the OFF position, the heater and air conditioner system starts or enters waiting mode depending on the new timer settings.
- When the difference in temperature between the Climate Schedule setting temperature and the temperature outside the vehicle is large, the temperature inside the vehicle may not be maintained at the setting temperature.
- The temperature in the passenger compartment may not be comfortable if entering the vehicle too soon before or too long after the scheduled time of departure.
- The heater and air conditioner system operation is limited to the capacity of the electric power when the charge connector is connected to the vehicle. Therefore, the temperature may not reach the set temperature due to limitations in heater and air conditioner system performance, if ambient temperature is excessively high or low.
- The Climate Schedule operates the heater and air conditioner system function so that a comfortable temperature is provided in the passenger compartment at the scheduled time of departure. The heater and air conditioner system is set to stop at the scheduled time of departure.
- Depending on the facilities of charging station, there may be time when it is not available for charging. Confirm the availability of the charging facility before setting the Climate Schedule. Be sure that the power switch of the

charger is turned on when setting the Climate Schedule.

- When the power switch is placed in the OFF position after changing the setting, the new setting will be applied.

SERVICING AIR CONDITIONER

Basic information

WARNING

The air conditioner system contains refrigerant under high pressure. To avoid personal injury, any air conditioner service should be done only by an experienced technician with the proper equipment.

The air conditioner system in your vehicle is charged with a refrigerant designed with the environment in mind.

This refrigerant will not harm the earth's ozone layer. However, it may contribute in a small part to global warming.

Special charging equipment and lubricant are required when servicing your vehicle's air conditioner. Using improper refrigerants or lubricants will cause severe damage to the air conditioner system. (See "Air conditioning system refrigerant and lubricant recommendations" (P.558).)

A NISSAN certified LEAF dealer will be able to service your environmentally friendly air conditioner system.

In-cabin microfilter

The air conditioner filter system is equipped with an in-cabin microfilter. To make sure the air conditioner heats, defogs, and ventilates efficiently, replace the filter according to the specified maintenance intervals listed in the "9. Maintenance and schedules" section. It is recommended to visit a NISSAN certified LEAF dealer to replace the filter.

The filter should be replaced if the air flow decreases significantly or if windows fog up easily when operating the heater or air conditioner.

RADIO ANTENNA

The antenna is located on the rear part of the vehicle roof. (See "Exterior rear" (P.6).)

CAUTION

- **A build up of ice on the antenna can affect radio performance. Remove the ice to restore radio reception.**
- **When removing snow from the roof, do not apply strong force to the antenna. That may cause broken antenna and roof panel dent.**
- **When using a high pressure car wash, keep the high pressure nozzle away from the antenna. The seal may be deformed or damaged.**
- **The radio performance may be affected if cargo carried on the roof blocks the radio signal. If possible, do not put cargo near the antenna.**

MEMO

5 Starting and driving

Precautions when starting and driving 333
Basic information 333
Tire Pressure Monitoring System (TPMS) 333
Avoiding collision and rollover 337
Off-road recovery 337
Rapid air pressure loss 337
Drinking alcohol/drugs and driving 338
Push-button power switch 339
Basic information 339
Intelligent Key system 339
Operating range for EV system start function 339
Power switch operation 340
Power switch positions 341
Emergency EV system shut off 341
Intelligent Key battery discharge 342
Before starting the EV system 342
Starting the EV (Electric Vehicle) system 343
Driving the vehicle 343
Electric shift control system 343
e-Step system 348
Basic information 348
e-Step system operation 349
e-Step system limitations 350
e-Step system temporarily unavailable 351
Parking brake 351
Basic information 351
Automatic operation 352
Manual operation 353
Automatic brake hold 354
Basic information 354
How to activate/deactivate the automatic brake hold function 355
How to use the automatic brake hold function 356
Drive Mode Selector 357
Basic information 357
PERSONAL mode 358
SPORT mode 358
STANDARD mode 358
ECO mode 358
Driver Assistance systems 359
Basic information 359
How to enable/disable the systems 361
Driver assistance troubleshooting guide 362
Traffic Sign Recognition (TSR) 368
Basic information 368
System operation 369
How to enable/disable the TSR system 371
System temporarily unavailable 371

System malfunction 371
System maintenance 372
Lane Departure Warning (LDW) 372
Basic information 372
LDW system operation 373
How to enable/disable the LDW system 374
LDW system limitations 375
System temporarily unavailable 376
System malfunction 376
System maintenance 376
Intelligent Lane Intervention (I-LI) 377
Basic information 377
I-LI system operation 378
How to enable/disable the I-LI system 379
I-LI system limitations 379
System temporarily unavailable 381
System malfunction 381
System maintenance 382
Blind Spot Warning (BSW) 383
Basic information 383
BSW system operation 384
How to enable/disable the BSW system 385
BSW system limitations 385
BSW driving situations 386
System temporarily unavailable 389
System malfunction 389
System maintenance 390
Intelligent Blind Spot Intervention (I-BSI) 391
Basic information 391
I-BSI system operation 393
How to enable/disable the I-BSI system 394
I-BSI system limitations 394
I-BSI driving situations 396
System temporarily unavailable 400
System malfunction 400
System maintenance 401
Rear Cross Traffic Alert (RCTA) 402
Basic information 402
RCTA system operation 403
How to enable/disable the RCTA system 405
RCTA system limitations 406
System temporarily unavailable 407
System malfunction 408
System maintenance 408
ProPILOT Assist Systems 409
Overview 409
ProPILOT Assist Systems Overview 412
ProPILOT Assist displays and indicators 419
Intelligent Cruise Control (ICC) 420
Conventional (fixed speed) cruise control 424
Steering Assist 425
Hands On Detection 427
Automatic Emergency Braking (AEB) with Pedestrian Detection system 429
Basic information 429
AEB with Pedestrian Detection system operation 430

Turning the AEB with Pedestrian Detection system ON/OFF 432
AEB with Pedestrian Detection system limitations 433
System temporarily unavailable 438
System malfunction 440
System maintenance 440
Intelligent Forward Collision Warning (I-FCW) 442
Basic information 442
I-FCW system operation 444
Turning the I-FCW system ON/OFF 445
I-FCW system limitations 447
System temporarily unavailable 448
System malfunction 449
System maintenance 449
Intelligent Driver Alertness (I-DA) 450
Basic information 450
I-DA system operation 451
How to enable/disable the I-DA system 452
I-DA system limitations 452
System malfunction 453
Rear Automatic Braking (RAB) 453
Basic information 453
RAB system operation 454
How to enable/disable the RAB system 455
RAB system limitations 456
System malfunction 458
System maintenance 458
Increasing power economy 459
Parking/parking on hills 460
Electric power steering 461
Brake system 462
Braking precautions 462
Brake assist 464
Brake assist 464
Anti-lock Braking System (ABS) 464
Secondary Collision Mitigation Braking (SCMB) 465
Vehicle Dynamic Control (VDC) system 466
Basic information 466
How to turn off the VDC system 467
Brake Force Distribution 468
Hill Start Assist system 469
Front and rear sonar system (if so equipped) 470
Basic information 470
System operation 471
How to enable/disable the sonar system 473
Sonar system limitations 474
System temporarily unavailable 475
System maintenance 475
Rear Sonar System (RSS) (if so equipped) 476
Basic information 476
System operation 477
How to enable/disable the RSS 478
RSS limitations 479
System temporarily unavailable 480
System maintenance 480

Cold weather driving 481
Basic information 481
12-volt battery 481
Coolant 481
Tire equipment 482
Special winter equipment 482
Parking brake 482
Corrosion protection 482
Freeing a frozen charge port lid 482

BASIC INFORMATION

WARNING

- **Do not leave children or adults who would normally require the support of others alone in your vehicle. Pets should not be left alone either.**

  They could accidentally injure themselves or others through inadvertent operation of the vehicle. Also, on hot, sunny days, temperatures in a closed vehicle could quickly become high enough to cause severe or possibly fatal injuries to people or animals.
- **Properly secure all cargo with ropes or straps to help prevent it from sliding or shifting. Do not place cargo higher than the seatbacks. In a sudden stop or collision, unsecured cargo could cause personal injury.**

TIRE PRESSURE MONITORING SYSTEM (TPMS)

Basic information

Each tire, including the spare (if provided), should be checked monthly when cold and inflated to the inflation pressure recommended by the vehicle manufacturer on the vehicle placard or tire inflation pressure label. (If your vehicle has tires of a different size than the size indicated on the vehicle placard or tire inflation pressure label, you should determine the proper tire inflation pressure for those tires.)

As an added safety feature, your vehicle has been equipped with a Tire Pressure Monitoring System (TPMS) that illuminates a low tire pressure telltale when one or more of your tires is significantly under-inflated. Accordingly, when the low tire pressure telltale illuminates, you should stop and check your tires as soon as possible, and inflate them to the proper pressure. Driving on a significantly under-inflated tire causes the tire to overheat and can lead to tire failure. Under-inflation also reduces energy efficiency and tire tread life, and may affect the vehicle's handling and stopping ability.

Please note that the TPMS is not a substitute for proper tire maintenance, and it is the driver's responsibility to maintain correct tire pressure, even if under-inflation has not reached the level to trigger illumination of the TPMS low tire pressure telltale.

Your vehicle has also been equipped with a TPMS malfunction indicator to indicate when the system is not operating properly. The TPMS malfunction indicator is combined with the low tire pressure telltale. When the system detects a malfunction, the telltale will flash for approximately one minute and then remain continuously illuminated. This sequence will continue upon subsequent vehicle start-ups as long as the malfunction exists. When the malfunction indicator is illuminated, the system may not be able to detect or signal low tire pressure as intended. TPMS malfunctions may occur for a variety of reasons, including the installation of replacement or alternate tires or wheels on the vehicle that prevent the TPMS from functioning properly. Always check the TPMS malfunction telltale after replacing one or more tires or wheels on your vehicle to ensure that the replacement or alternate tires and wheels allow the TPMS to continue to function properly.

Additional information

- The TPMS will activate only when the vehicle is driven at speeds above 16 MPH (25 km/h). Also, this system may not detect a sudden drop in tire pres-

sure (for example a flat tire while driving).

- The low tire pressure warning light does not automatically turn off when the tire pressure is adjusted. After the tire is inflated to the recommended pressure, the vehicle must be driven at speeds above 16 MPH (25 km/h) to activate the TPMS and turn off the low tire pressure warning light. Use a tire pressure gauge to check the tire pressure.
- The "Tire Pressure Low - Add Air" warning appears in the vehicle information display when the low tire pressure warning light is illuminated and low tire pressure is detected. The "Tire Pressure Low - Add Air" warning turns off when the low tire pressure warning light turns off.

  The "Tire Pressure Low - Add Air" warning does not appear if the low tire pressure warning light illuminates to indicate a TPMS malfunction.
- Tire pressure rises and falls depending on the heat caused by the vehicle's operation and the outside temperature. Do not reduce the tire pressure after driving because the tire pressure rises after driving. Low outside temperature can lower the temperature of the air inside the tire which can cause a lower tire inflation pressure. This may cause the low tire pressure warning light to illuminate. If the warning light illuminates in low ambient temperature, check the tire pressure for all four tires.
- You can also check the tire pressure of all tires in the vehicle information display. (See "Trip computer" (P.194).)

For additional information, see "Low tire pressure warning light" (P.165) and "Tire Pressure Monitoring System (TPMS)" (P.485).

WARNING

- **Radio waves could adversely affect electric medical equipment. Those who use a pacemaker should contact the electric medical equipment manufacturer for the possible influences before use.**
- **If the low tire pressure warning light illuminates while driving, avoid sudden steering maneuvers or abrupt braking, reduce vehicle speed, pull off the road to a safe location and stop the vehicle as soon as possible. Driving with under-inflated tires may permanently damage the tires and increase the likelihood of tire failure. Serious vehicle damage could occur and may lead to an accident and could result in serious personal injury. Check the tire pressure for all four tires. Adjust the tire pressure to the recommended COLD tire pressure shown on the Tire and Loading Information label to turn the low tire pressure warning light OFF. If you have a flat tire, repair it with an emergency tire puncture repair kit as soon as possible. (See "Flat tire" (P.485).)**
- **Replacing tires with those not originally specified by NISSAN could affect the proper operation of the TPMS.**

- **NISSAN recommends using only Genuine NISSAN Emergency Tire Sealant provided with your vehicle or equivalent. Other tire sealants may damage the valve stem seal which can cause the tire to lose air pressure. It is recommended that you visit a NISSAN certified LEAF dealer as soon as possible after using tire repair sealant.**
- **To help avoid serious personal injury or death, when checking your tire pressure, either as part of routine maintenance or because of a TPMS alert, please check the pressure in all of your tires. Driving on underinflated tires can cause tire failure and interfere with the proper operation of other vehicle systems.**

CAUTION

- **The TPMS may not function properly when the wheels are equipped with tire chains or the wheels are buried in snow.**
- **Do not place metalized film or any metal parts (antenna, etc.) on the windows. This may cause poor reception of the signals from the tire pressure sensors, and the TPMS will not function properly.**
- **When inflating the tires and checking the tire pressure, never bend the valves.**
- **Use Genuine NISSAN valve caps that comply with the factory-fitted valve cap specifications.**
- **Do not use metal valve caps.**
- **Fit the valve caps properly. Without the valve caps the valve and tire pressure monitor sensors could be damaged.**
- **Do not damage the valves and sensors when storing the wheels or fitting different tires.**
- **Replace the TPMS sensor valve stem (including valve core and cap) and screw (if so equipped) when the tires are replaced due to wear or age. The screw (if so equipped) must be fitted correctly with a torque setting of 1.4 ± 0.1 N.m. The TPMS sensors can be used again.**
- **Use caution when using tire inflation equipment with a rigid air supply tube, as leverage applied by the long nozzle can damage the valve stem.**

Some devices and transmitters may temporarily interfere with the operation of the TPMS and cause the low tire pressure warning light to illuminate. Some examples are:

- Facilities or electric devices using similar radio frequencies are near the vehicle.
- If a transmitter set to similar frequencies is being used in or near the vehicle.
- If a computer (or similar equipment) or a DC/AC converter is being used in or near the vehicle.

Low tire pressure warning light may illuminate in the following cases.

- If the vehicle is equipped with a wheel and tire without TPMS.
- If the TPMS has been replaced and the ID has not been registered.
- If the wheel is not originally specified by NISSAN.

NOTE:
FCC Notice:
For USA:
FCC ID: PAXPMVG000
This device complies with Part 15 of the FCC Rules. Operation is subject to the following two conditions: (1) this device may not cause harmful interference, and (2) this device must accept any interference received, including interference that may cause undesired operation.
NOTE:
Changes or modifications not expressly approved by the party responsible for compliance could void the user's authority to operate the equipment.
For Canada:
This device contains licence-exempt transmitter(s)/receiver(s) that comply with Innovation, Science and Economic Development Canada's licence-exempt RSS(s). Operation is subject to the following two conditions: (1) This device may not cause interference. (2) This device must accept any interference, including interference that may cause undesired operation of the device.
L'émetteur/récepteur exempt de licence contenu dans le présent appareil est conforme aux CNR d'Innovation, Sciences et Développement économique Canada applicables aux appareils radio exempts de licence. L'exploitation est autorisée aux deux conditions suivantes:
1. L'appareil ne doit pas produire de brouillage;
2. L'appareil doit accepter tout brouillage radioélectrique subi, même si le brouillage est susceptible d'en compromettre le fonctionnement.

TPMS with Easy Fill Tire Alert

WARNING

After rotating the tires, do not use the Easy-Fill Tire Alert to adjust the tire pressure. Instead use a gauge to adjust the tires to the correct pressure in accordance with Tire and Loading Information label.

When adding air to an under-inflated tire, the TPMS with Easy Fill Tire Alert provides visual and audible signals outside the vehicle to help you inflate the tires to the recommended COLD tire pressure.

Vehicle set-up:

1. Park the vehicle in a safe and level place.
2. Apply the parking brake and push the P (Park) button to shift to the P (Park) position.
3. Place the power switch in the ON position. Do not start the EV system.

Operation:

1. Add air to the tire.
2. After a few seconds, the hazard indicators will start flashing.
3. When the designated pressure is reached, the horn beeps once and the hazard indicators stop flashing.
4. Perform the above steps for each tire.

- If the tire is over-inflated more than approximately 4 psi (30 kPa), the horn beeps and the hazard indicators flash 3 times. To correct the pressure, push the core of the valve stem on the tire briefly to release pressure. When the pressure reaches the designated pressure, the horn beeps once.
- If the hazard indicator does not flash within approximately 15 seconds after starting to inflate the tire, it indicates that the TPMS with Easy Fill Tire Alert is not operating.
- The TPMS will not activate the Easy Fill Tire Alert under the following conditions:

- If there is interference from an external device or transmitter
- The air pressure from the inflation device such as those using a power socket is not sufficient to inflate the tire
- If an electrical equipment is being used in or near the vehicle
- There is a malfunction in the TPMS system
- There is a malfunction in the horn or hazard indicators

- If the TPMS with Easy Fill Tire Alert does not operate due to TPMS interference, move the vehicle about 3 ft (1m) backward or forward and try again.

If the TPMS with Easy Fill Tire Alert is not working, use a tire pressure gauge.

AVOIDING COLLISION AND ROLLOVER

WARNING

Failure to operate this vehicle in a safe and prudent manner may result in loss of control or an accident.

Be alert and drive defensively at all times. Obey all traffic regulations. Avoid excessive speed, high speed cornering, or sudden steering maneuvers, because these driving practices could cause you to lose control of your vehicle. **As with any vehicle, a loss of control could result in a collision with other vehicles or objects, or cause the vehicle to rollover, particularly if the loss of control causes the vehicle to slide sideways.** Be attentive at all times, and avoid driving when tired. Never drive when under the influence of alcohol or drugs (including prescription or over-the-counter drugs which may cause drowsiness). Always wear your seat belt as outlined in"Seat belts" (P.96), and also instruct your passengers to do so.

Seat belts help reduce the risk of injury in collisions and rollovers.

In a rollover crash, an unbelted person is significantly more likely to die than a person wearing a seat belt.

OFF-ROAD RECOVERY

If the right side or left side wheels leave the road surface, maintain control of the vehicle by following the procedure below. Please note that this procedure is only a general guide. The vehicle must be driven as appropriate based on the conditions of the vehicle, road and traffic.

1. Remain calm and do not overreact.
2. Do not apply the brakes.
3. Maintain a firm grip on the steering wheel with both hands and try to hold a straight course.
4. When appropriate, slowly release the accelerator pedal to gradually slow the vehicle.
5. If there is nothing in the way, steer the vehicle to follow the road while the vehicle speed is reduced. Do not attempt to drive the vehicle back onto the road surface until vehicle speed is reduced.
6. When it is safe to do so, gradually turn the steering wheel until both tires return to the road surface. When all tires are on the road surface, steer the vehicle to stay in the appropriate driving lane.
   - If you decide that it is not safe to return the vehicle to the road surface based on vehicle, road or traffic conditions, gradually slow the vehicle to a stop in a safe place off the road.

RAPID AIR PRESSURE LOSS

Rapid air pressure loss or a “blow-out” can occur if the tire is punctured or is damaged due to hitting a curb or pothole. Rapid air pressure loss can also be caused by driving on under-inflated tires.

Rapid air pressure loss can affect the han-

dling and stability of the vehicle, especially at highway speeds.

Help prevent rapid air pressure loss by maintaining the correct air pressure and visually inspect the tires for wear and damage. See "Tire wear and damage" (P.539).

If a tire rapidly loses air pressure or “blows-out” while driving, maintain control of the vehicle by following the procedure below. Please note that this procedure is only a general guide. The vehicle must be driven as appropriate based on the conditions of the vehicle, road and traffic.

WARNING

The following actions can increase the chance of losing control of the vehicle if there is a sudden loss of tire air pressure. Losing control of the vehicle may cause a collision and result in personal injury.

- **The vehicle generally moves or pulls in the direction of the flat tire.**
- **Do not rapidly apply the brakes.**
- **Do not rapidly release the accelerator pedal.**
- **Do not rapidly turn the steering wheel.**

1. Remain calm and do not overreact.
2. Maintain a firm grip on the steering wheel with both hands and try to hold a straight course.
3. When appropriate, slowly release the accelerator pedal to gradually slow the vehicle.
4. Gradually steer the vehicle to a safe location off the road and away from traffic if possible.
5. Lightly apply the brake pedal to gradually stop the vehicle.
6. Turn on the hazard warning flashers and either contact a roadside emergency service to change the tire or see "Repairing flat tire" (P.486) .

DRINKING ALCOHOL/DRUGS AND DRIVING

WARNING

Never drive under the influence of alcohol or drugs. Alcohol in the bloodstream reduces coordination, delays reaction time and impairs judgement. Driving after drinking alcohol increases the likelihood of being involved in an accident injuring yourself and others. Additionally, if you are injured in an accident, alcohol can increase the severity of the injury.

NISSAN is committed to safe driving. However, you must choose not to drive under the influence of alcohol. Every year thousands of people are injured or killed in alcohol-related accidents. Although the local laws vary on what is considered to be legally intoxicated, the fact is that alcohol affects all people differently and most people underestimate the effects of alcohol.

Remember, drinking and driving don’t mix! And that is true for drugs, too (over-the-counter, prescription, and illegal drugs). Don’t drive if your ability to operate your vehicle is impaired by alcohol, drugs, or some other physical condition.

PUSH-BUTTON POWER SWITCH

BASIC INFORMATION

⚠ WARNING

Do not operate the push-button power switch while driving the vehicle except in an emergency. (The EV system will stop when the power switch is pushed 3 consecutive times or the power switch is pushed and held for more than 2 seconds.) If the EV system stops while the vehicle is being driven, this could lead to a crash and serious injury.

Before operating the push-button power switch, be sure to push the P (Park) button to shift to the P (Park) position.

INTELLIGENT KEY SYSTEM

The Intelligent Key system can be used to operate the power switch without taking the key out from your pocket or bag. The operating environment and/or conditions may affect the Intelligent Key system operation.

Some indicators and warnings for operation are displayed on the vehicle information display. See "Vehicle information display" (P.170).

⚠ CAUTION

- **Be sure to carry the Intelligent Key with you when operating the vehicle.**
- **Never leave the Intelligent Key inside the vehicle when you leave the vehicle.**
- **If the 12-volt battery is discharged, the power switch cannot be switched from the OFF position, the steering wheel cannot be moved. Charge the 12-volt battery as soon as possible. See "Jump starting" (P.497).**

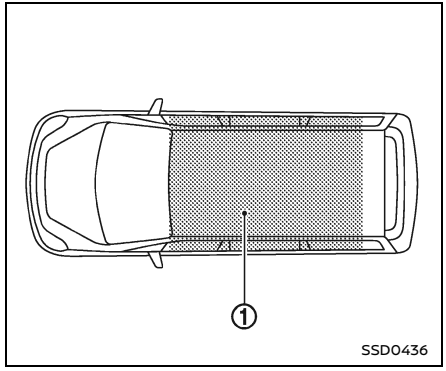

SSD0436

OPERATING RANGE FOR EV SYSTEM START FUNCTION

The Intelligent Key can only be used for starting the EV system when the Intelligent Key is within the specified operating range ①.

When the Intelligent Key battery is almost discharged or strong radio waves/noises are present near the operating location, the Intelligent Key system's operating range becomes narrower and may not function properly.

If the Intelligent Key is within the operating range, it is possible for anyone, even someone who does not carry the Intelligent Key, to push the power switch to

start the EV system.

- The cargo room area is not included in the operating range but the Intelligent Key may function.
- If the Intelligent Key is placed on the instrument panel, inside the glove box, multi center storage or door pocket, the Intelligent Key may not function.
- If the Intelligent Key is placed near the door or window outside the vehicle, the Intelligent Key may function.

If the battery of the Intelligent Key is discharged, see "Intelligent Key battery discharge" (P.342).

POWER SWITCH OPERATION

CAUTION

- **Do not leave the vehicle for extended periods of time when the power switch is in the ON position and the EV system is not running. This can discharge the battery.**
- **Use electrical accessories with the EV system running to avoid discharging the vehicle battery. If you must use accessories while the EV system is not running, do not use them for extended periods of time and do not use multiple electrical accessories at the same time.**

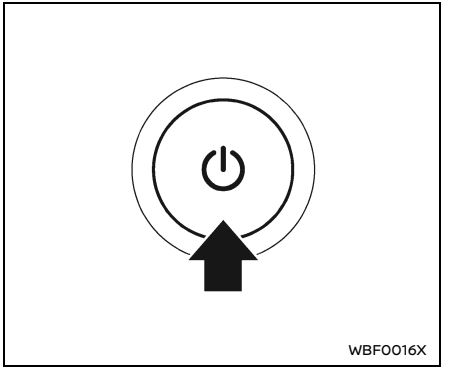

When the power switch is pushed without depressing the brake pedal, the power switch position will change as follows.

- once to change to ON.
- two times to change to OFF.

When the power switch cannot be switched to the OFF position, proceed as follows.

1. Push the P (Park) button to shift to the P (Park) position.
2. Push the power switch. The power switch position will change to the ON position.
3. Push the power switch again to the OFF position.

POWER SWITCH POSITIONS

ON

All the electrical power activate at this position.

The ON position has a battery saver feature that will place the power switch in the OFF position after a period of time under the following conditions:

- The power switch is in the ON position and the READY to drive indicator light is not illuminated.
- Vehicle is parked.

The battery saver feature will be canceled if the following occur:

- The battery saver is canceled while charging.

READY (Normal operating position)

This position turns on the EV system, electrical accessories and the vehicle can be driven.

OFF

The EV system is turned off in this position.

Auto ACC

Even when the power switch is in the OFF position, the Auto ACC function automatically switches to the state where electrical components such as the navigation system and door mirrors can be used (ACC state) under specific conditions. You can use the navigation system, door mirrors, etc. even after the EV system is stopped or before the power switch is turned ON.

The Auto ACC function is activated in the following cases.

- When the door is unlocked using the Intelligent Key function.
- When the power switch is placed in the OFF position.

The Auto ACC function will be stopped in the following cases.

- After a period of time have passed since the EV system was stopped and the vehicle has been locked with the Intelligent Key function.
- After a period of time have passed since the driver's door is opened and then closed without locking the doors.

CAUTION

To prevent the 12V battery from discharging, use the electrical components (navigation system, power socket, etc.) with the EV system started.

EMERGENCY EV SYSTEM SHUT OFF

To shut off the EV system in an emergency situation while driving or when the Intelligent Key battery is discharged, perform the following procedure:

- Rapidly push the push-button power switch 3 consecutive times in less than 1.5 seconds, or
- Push and hold the push-button power switch for more than 2 seconds.

After EV system shut-off, open the door to return to the normal condition.

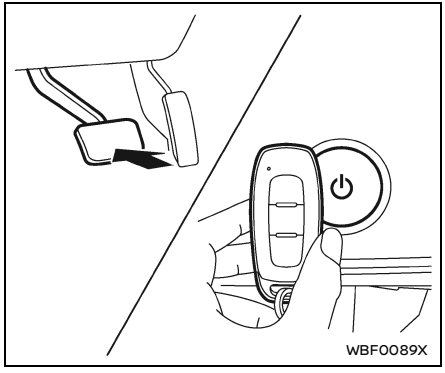

INTELLIGENT KEY BATTERY DISCHARGE

If the battery of the Intelligent Key is discharged, or environmental conditions interfere with the Intelligent Key operation, start the EV (Electric Vehicle) system in the READY to drive mode according to the following procedure:

1. Push the P (Park) button to shift to the P (Park) position.
2. Firmly apply the foot brake.
3. Push the power switch.
4. Touch the power switch with the Intelligent Key as illustrated. (A chime will sound.)
5. Push the power switch while depressing the brake pedal within 10 seconds after the chime sounds. The power switch position changes to READY to drive.

After step 3 is performed, when the power switch is pushed without depressing the brake pedal, the power switch position will change to ON.

NOTE:

- **When the power switch is pushed to the ON position or READY to drive position by the above procedures, the "Key Battery Low" warning may appear (on the vehicle information display) even if the Intelligent Key is inside the vehicle. This is not a malfunction. To turn off the warning, touch the power switch with the Intelligent Key again.**
- **If the "Key Battery Low" warning appears, replace the battery as soon as possible. (See "Intelligent Key battery replacement" (P.525).)**

⚠ WARNING

The driving characteristics of your vehicle will change remarkably by any additional load and its distribution, as well as by adding optional equipment (trailer coupling, roof racks, etc.). Your driving style and speed must be adjusted according to the circumstances. Especially when carrying heavy loads, your speed must be reduced adequately.

- Make sure the area around the vehicle is clear.
- Visually inspect tires for their appearance and condition. Measure and check the tire pressure for proper inflation.
- Check that all windows and lights are clean.
- Adjust the seat and head restraint/headrest positions.
- Adjust the inside and outside rearview mirror positions.
- Fasten your seat belt and ask all passengers to do the same.
- Check that all doors are locked.
- Check the operation of the warning lights when the power switch is placed in the ON position.

- Maintenance items in the "8. Do-it-yourself" section should be checked periodically.

STARTING THE EV (Electric Vehicle) SYSTEM

1. Confirm the parking brake is applied.
2. Confirm that the vehicle is in the P (Park) position.

   The EV (Electric Vehicle) is designed not to operate unless the shift position is in the P (Park) or N (Neutral) positions.

   The Intelligent Key must be carried with you when operating the power switch.
3. Firmly depress the brake pedal and push the power switch to place the EV system in the READY to drive position.

   To place the vehicle in the READY to drive position immediately, push and release the power switch while depressing the brake pedal with the power switch in any position. The READY to drive indicator light READY in the meter illuminates.
4. To stop the EV system, push the shift button "P" to shift to the P (Park) position, and push the power switch to the OFF position.

DRIVING THE VEHICLE

ELECTRIC SHIFT CONTROL SYSTEM

Basic information

This vehicle is electronically controlled to produce maximum available power and smooth operation.

The recommended operating procedures for this vehicle are shown on the following pages.

Starting the vehicle

1. After placing the vehicle in the READY to drive position, fully depress the foot brake pedal and push the shift button D (Drive) position.

   The shift buttons of this vehicle are designed so that the foot brake pedal must be depressed before shifting from the P (Park) position to any driving position while the power switch is in the READY to drive position.

   The shift position other than P (Park) cannot be selected if the power switch is placed in the OFF position.
2. Keep the foot brake pedal depressed, and push R (Reverse) or D (Drive) position.
3. Release the parking brake and foot brake pedal, and then gradually start the vehicle in motion.

WARNING

- **Do not depress the accelerator pedal while shifting from P (Park) or N (Neutral) to R (Reverse) or D (Drive) position. Always depress the brake pedal until shifting is completed. Failure to do so could cause you to lose control and have an accident.**
- **Do not shift to the B position (if so equipped) or select strong regenerative braking intensity (if so equipped) abruptly on slippery roads. This may cause a loss of control.**
- **Never shift to either P (Park) or R (Reverse) position while the vehicle is moving forward and P (Park) or D (Drive) position while the vehicle is moving reversing. This could cause an accident or damage the vehicle.**

CAUTION

To avoid possible damage to your vehicle; when stopping the vehicle on an uphill grade, do not hold the vehicle by depressing the accelerator pedal. The foot brake should be used for this purpose.

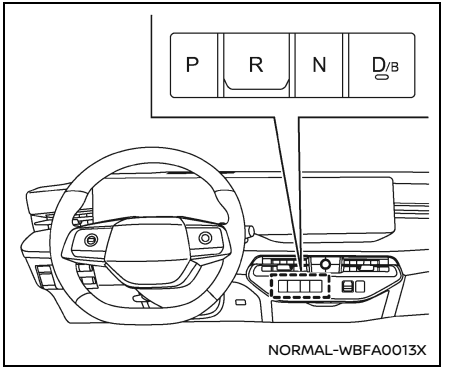

Example

Shifting

After starting the EV system, fully depress the brake pedal and push the shift button to the R (Reverse), N (Neutral) or D (Drive)/ B (if so equipped) position.

After operating the shift button, make sure that the shift position is switched to the intended one.

NOTE:

- **The vehicle automatically applies the P (Park) position when the power switch is in the OFF position.**
- **When the READY to drive indicator light does not illuminate, the shift**

position cannot be changed to the D (Drive) or R (Reverse) position even if the power switch is placed in the ON position.

- **To place the vehicle into the B position (if o equipped) from the D (Drive) position, push the D/B button.**

  When pushing the D/B button again, the position will be changed to D (Drive) position.
- **If the following conditions have been met, the shift position may be changed to the P (Park) position automatically.**
  - **When the driver's seat belt is not fastened.**
  - **When the driver's door is opened.**

WARNING

- **If you use an implantable cardiac pacemaker, an implantable cardioverter defibrillator (ICD) or other medical devices, keep the implanted body parts away from the shift button. The strong magnet in shift button may affect the operation of medical devices.**
- **Keep magnetic cards or things with magnetic force away from the shift button. It may cause malfunction and lead to an accident.**
- **On a hilly road, do not allow the vehicle to roll backwards while in the D (Drive) position, or allow the vehicle to roll forward while in the R (Reverse) position. This may cause an accident.**
- **Do not operate the shift button while the accelerator pedal is depressed. This may cause a sudden start which could result in an accident.**

CAUTION

The following operations are not allowed because excessive force would be applied to the traction motor and this may result in damage to the vehicle:

- **Selecting the R (Reverse) position when driving forward**
- **Selecting the D (Drive) position when reversing**

If these operations are attempted, a chime sounds and the vehicle shifts to the N (Neutral) position.

P (Park):

Use this position when the vehicle is parked or when placing the vehicle in the READY to drive position. Make sure the vehicle is completely stopped. **The brake pedal must be depressed to change the shift position from the N (Neutral) position or any drive position to the P (Park) position.** Apply the parking brake. When parking on a hill, apply the parking brake first, then select the P (Park) position.

CAUTION

Use this position only when the vehicle is completely stopped.

NOTE:

- **While the vehicle is stationary, if the shift position is placed in any position other than the P (Park) position when the power switch is set to OFF, it will automatically switch to the P (Park) position.**
- **When the P (Park) position button is pushed while driving, the operation is canceled. (A buzzer sounds and the**

shift position before being operated is maintained.)

R (Reverse):

Use this position to back up. Always be sure the vehicle is completely stopped before selecting the R (Reverse) position. **The brake pedal must be depressed to change the shift position from the P (Park) position, the N (Neutral) position or any drive position to the R (Reverse) position.**

If the vehicle is shifted to the R (Reverse) position while the vehicle is moving forward, the chime will sound and the vehicle will switch into the N (Neutral) position.

N (Neutral):

Neither forward nor reverse gear is engaged. The vehicle can be placed in READY to drive position in this position.

Do not shift to the N (Neutral) position while driving. The regenerative brake system does not operate in the N (Neutral) position. However, the vehicle brakes will still stop the vehicle.

D (Drive):

Use this position for all normal forward driving.

If the vehicle is placed in the D (Drive) position while the vehicle is reversing, the chime will sound and the vehicle will switch into the N (Neutral) position.

B (if so equipped):

Use the B position for downhill driving. When the B position is used, more regenerative brake is applied when the accelerator pedal is released in comparison to the D (Drive) position. Less deceleration is provided by the regenerative brake system when the Li-ion battery is fully charged or the battery temperature is low.

Neutral hold mode function

This function enables you to turn off the EV system with the vehicle in the N (Neutral) position. While this function is activated, the vehicle can be moved by pushing with hand (when car washing) even if the power switch is in the OFF position. When using this function, release the parking brake.

WARNING

- **Use this function on a level surface only. Failure to do so may cause the vehicle to move accidentally and could result in a collision or serious personal injury.**
- **Do not use this function for a purpose other than car washing.**
- **When the power switch is placed in the ON position after activating this function, depress the brake pedal to stop the vehicle because the shift position is in the N (Neutral) position.**
- **If this function is not activated regardless of proper operation, the vehicle powertrain may malfunction. It is recommended that you visit a NISSAN certified LEAF dealer for this service.**

To activate the Neutral hold mode, perform the following operations.

1. Push the power switch to start the EV system.
2. Release the parking brake and Automatic brake hold function.
3. Depress the brake pedal to stop the vehicle in the desired location such as parking space, an automatic car wash entrance, etc.
4. Depress and hold the brake pedal through all steps listed below. Do not release it during the process to activate the Neutral hold mode.

5. Wait for 10 seconds without pushing any shift buttons.

NOTE:

It is necessary to perform the steps 6 through 8 within approximately 5 seconds.

6. Push the P (Park) position button and confirm the shift position indicator indicates the P (Park) position.
7. Push the shift button to the N (Neutral) position and confirm the shift position indicator indicates the N (Neutral) position and then release the shift button.
8. Push the N (Neutral) position button again. The Neutral Hold Mode activated indicator appears in the vehicle information display when the Neutral hold mode function is activated. (See "Neutral Hold Mode activated indicator" (P.192).)
9. Confirm that the parking brake is released.
10. Place the power switch in the OFF position. The EV system will turn off with holding the N (Neutral) position.

To exit the Neutral hold mode, place the vehicle in other than N (Neutral) position.

NOTE:

- **If the parking brake is not released, release the parking brake. (See "Parking brake" (P.351).)**
- **When the power switch is placed in the OFF position while the shift position is in the N (Neutral) position, a message will appear in the vehicle information display. (See "Neutral Hold Mode guidance indicator" (P.192).)**
- **If the Neutral hold mode is unavailable, a message will appear in the vehicle information display. (See "Neutral Hold Mode was not activated indicator" (P.192).) To activate the Neutral hold mode, wait for a while without shifting operation and then perform the operations again.**

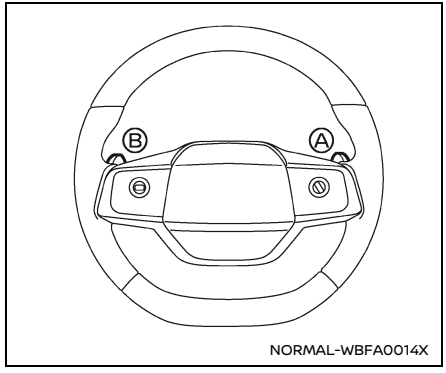

Paddle selector

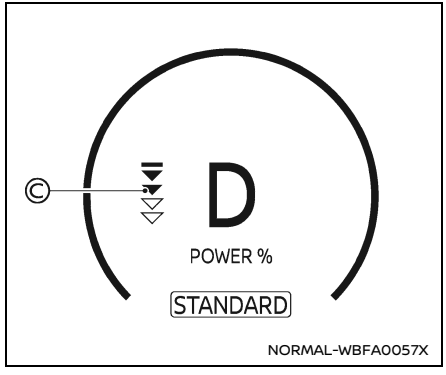

Vehicle information display

Manually selectable regenerative braking intensity (if so equipped)

When the vehicle is in D (Drive) position, regenerative braking intensity can be manually selected (level 1 - 4). The current intensity is displayed on the vehicle information display Ⓒ as a number of triangles.

Level 1 = least regenerative braking effect.

Level 4 = most regenerative braking effect.

The default setting is Level 2

When driving down a long downhill, for example, you can temporarily increase the intensity of the regenerative braking to achieve an effect similar to "engine braking."

To reduce the intensity of the regenerative braking, briefly pull the right-side paddle selector Ⓐ.

To increase the intensity of the regenerative braking, briefly pull the left-side paddle selector Ⓑ.

NOTE:

- **Less deceleration is provided by the regenerative brake system when the Li-ion battery has been charged to the limit. Regenerative brake is automatically reduced when the Li-ion battery is charged to the limit to prevent the Li-ion battery from becoming overcharged. Regenerating brake is also automatically reduced when the battery temperature is high/low to prevent Li-ion battery damage.**
- **The regenerative braking intensity cannot be selected manually while the e-Step system (see "e-Step system" (P.348)) or the Intelligent Cruise Control (ICC) system (see "ProPILOT Assist Systems" (P.409)) is active.**
- **After the EV system has been restarted, or the e-Step system or the ICC is deactivated, the regenerative braking intensity level will be reset to the default Level 2.**

e-Step SYSTEM

BASIC INFORMATION

WARNING

Never rely solely on the e-Step system, as there is a performance limit to the system function. Always drive carefully and attentively. The brake pedal should be operated depending on traffic or road conditions.

The e-Step system enables the driver to slow the vehicle by operating only the accelerator pedal. This system helps to keep the driver from moving his/her foot between the accelerator pedal and the brake pedal.

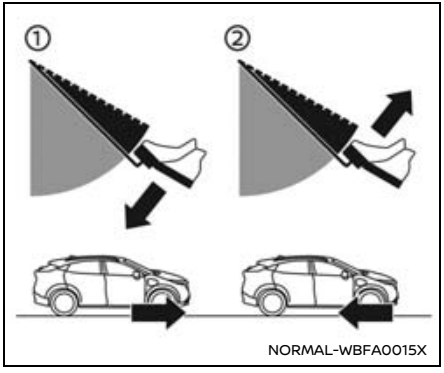

① Acceleration

② Deceleration (instead of brake pedal)

e-Step SYSTEM OPERATION

Basic information

When the e-Step system is activated, the regenerative brake is enhanced and the driver can adjust the vehicle speed by only depressing or returning the accelerator pedal. When you release (take your foot off) the accelerator pedal, the vehicle slows down smoothly without depressing the brake pedal.

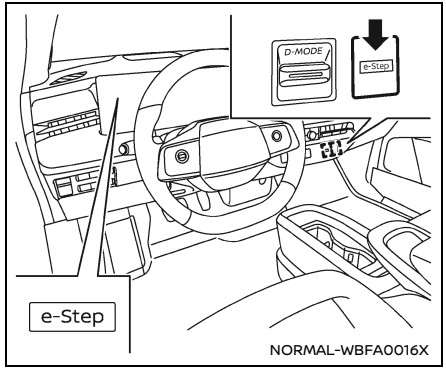

The e-Step system will be turned ON or OFF each time the e-Step switch (located on the instrument panel) is pushed. (The e-Step indicator in the vehicle information display shows the status of the e-Step system.)

When the e-Step system is activated, the characteristics of the accelerator pedal change significantly and the accelerator pedal operates differently than a conventional accelerator pedal operates. Be sure to confirm the status of the e-Step system (ON or OFF) in the vehicle information display before driving.

When the e-Step system is activated, the e-Step indicator illuminates in blue and displays “e-Step”. When the e-Step system is turned off, the indicator changes to gray and displays “e-Step OFF”.

System Activation

To activate the e-Step system, place the power switch in the READY to drive or ON position and push the e-Step switch, and be sure to confirm the status of the e-Step system.

System deactivation

To deactivate the e-Step system, with the power switch in the READY to drive or ON position, push the e-Step switch.

NOTE:

- **When the e-Step system is switched to ON or OFF, the degree of vehicle deceleration will change.**
- **The e-Step system is automatically turned OFF when the EV system is restarted.**
- **To keep the e-Step system activated even if the EV system is restarted, turn the "Retain Mode" ON in the "Driver Assistance" menu of the vehicle information display. (See "Settings" (P.172).)**
- **The "Retain Mode" setting is not reset by using the "Factory Reset" setting.**

e-Step driving features

The e-Step system provides the following driving features:

When driving the vehicle:

- Depressing or returning the accelerator pedal will change the degree of acceleration and deceleration accordingly.
- Returning the accelerator pedal generates more deceleration than normal. (The maximum deceleration changes according to the vehicle speed.)
- Releasing (taking your foot off) the accelerator pedal reduces the vehicle speed. To stop the vehicle, depress the brake pedal.
- The vehicle's stop lights illuminate when the deceleration level reaches an ordinary braking operation.

If the e-Step system may not decelerate the vehicle sufficiently, depress the brake pedal whenever necessary. The brake pedal can be operated to reduce the vehicle speed in the same way as normal even when the e-Step system is activated.

When backing up the vehicle:

With the shift position in the R (Reverse), the accelerator pedal can be used in the same way as in the e-Step system is off.

Other driving tips for the e-Step system:

- For smooth deceleration when the e-Step system is activated, it is recommended to adjust the accelerator pedal while driving with your foot on it (depressing or returning, but not releasing).
- Shifting the shift position from D (Drive) to B (if so equipped) or from B to D will not affect the e-Step system feature.
- The e-Step system will not function under the following conditions:
  - When the vehicle is placed in the P (Park) or N (Neutral) position.
  - When a driver assistance function such as ProPILOT Assist system is operating.
- Brake pedal may move depending on deceleration and you may feel a noise when e-Step is active. This is a normal system operation.

e-Step SYSTEM LIMITATIONS

WARNING

Listed below are the system limitations for the e-Step system. Failure to operate the vehicle in accordance with these system limitations could result in serious injury or death.

- **If the deceleration force provided by the e-Step system is not sufficient, depress the brake pedal.**
- **Under the following conditions the e-Step system may not decelerate the vehicle sufficiently. Depress the brake pedal whenever necessary.**
  - **When excessively heavy baggage is loaded in the vehicle.**
  - **When driving on steep downhill roads.**
  - **When driving on icy roads.**
- **Do not use the e-Step system when your vehicle is towed.**

- **Frequent braking may result in overheating the brakes and causing a loss of braking capability. This can lead to a crash causing injury or death. Apply the regenerative brake depending on a situation.**

CAUTION

- **The characteristics of deceleration changes according to the vehicle speed. At very low speeds, the vehicle "creeps", similar to the e-Step system is deactivated.**
- **Be careful not to operate the e-Step switch mistakenly or unintentionally.**

e-Step SYSTEM TEMPORARILY UNAVAILABLE

If the e-Step system is temporarily unavailable, "e-Step system Unavailable To slow press brake pedal" warning message appears on the vehicle information display. Stop the vehicle in a safe location. Turn the EV system off and restart the EV system. If the warning message continues to appear, have the system checked. It is recommended that you visit a NISSAN certified LEAF dealer for this service.

CAUTION

- **When the e-Step system is turned on, stop the vehicle regularly and take a break when driving on a long downhill road. Using the system continuously may reduce its effectiveness.**
- **When the e-Step system is turned on, turn it off when driving on downhill roads and apply the regenerative brake with the shift position placed in the "D" (Drive) position in conjunction with brake pedal.**

  If the e-Step system is used continuously, it may be temporarily unavailable and automatically switched off to prevent the brake system from overheating.

PARKING BRAKE

BASIC INFORMATION

WARNING

- **Never drive the vehicle with the parking brake applied. The brake will overheat and fail to operate and will lead to an accident.**
- **Never release the parking brake from outside the vehicle. If the vehicle moves, it will be impossible to push the foot brake pedal and will lead to an accident.**
- **Never use the shift buttons in place of the parking brake. When parking, be sure the parking brake is fully applied.**
- **To help avoid risk of injury or death through unintended operation of the vehicle and/or its systems, do not leave children, people who require the assistance of others or pets unattended in your vehicle. Additionally, the temperature inside a closed vehicle on a warm day can quickly become high enough to cause a significant risk of injury or death to people and pets.**

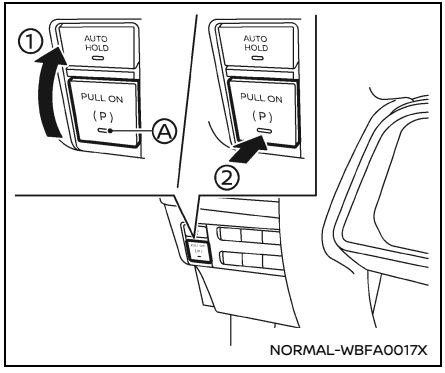

① Apply
② Release
Ⓐ Indicator light

The electronic parking brake can be applied or released automatically or by operating the parking brake switch.

AUTOMATIC OPERATION

The electronic parking brake is automatically released as soon as the vehicle starts while the accelerator pedal is depressed under the following conditions.

- While the EV system is running.
- When the shift position is in the D (Drive) or R (Reverse) position.
- When the driver's door is closed.

The electronic parking brake is automatically released within 5 seconds after the shift position is placed in the D (Drive) or R (Reverse) position even if the driver's door is opened. Be sure to close the door before starting the vehicle.

WARNING

Before leaving the vehicle, place the shift position in the P (Park) position and check that the electronic parking brake warning light is illuminated to confirm that the electronic parking brake is applied. The electronic parking brake warning light will remain on for a period of time after the driver's door is locked.

CAUTION

When parking in an area where the outside temperature is below 32°F (0°C), the electronic parking brake, if applied, may freeze in place and may be difficult to release.

For safe parking, it is recommended that you place the shift position in the P (Park) position and securely block the wheels.

NOTE:

- **To keep the electronic parking brake released after the EV system is turned off, place the power switch in the OFF position, depress the brake pedal and push down the parking brake switch before opening the driver's door.**
- **If a malfunction occurs in the electronic parking brake system (for example, due to battery discharge), it is recommended to contact a NISSAN certified LEAF dealer.**
- **Under the following conditions, the electronic parking brake will automatically be applied and the brake force of the automatic brake hold function will be released. The automatic brake hold indicator light turns off.**
  - **The braking force is applied by the automatic brake hold function for 3 minutes or longer.**
  - **The vehicle is in the P (Park) position.**
  - **The electronic parking brake is applied manually.**
  - **The driver's seat belt is unfastened.**
  - **The driver's door is opened.**
  - **The power switch is placed in the OFF position.**

- **A malfunction occurs in the automatic brake hold function.**

- **Make sure that the electronic parking brake system warning light is OFF before starting the vehicle.**

MANUAL OPERATION

Basic information

To apply: When the vehicle is stopped, pull the parking brake switch up. (The electronic parking brake will apply even if the power switch is placed in the OFF position.) The indicator light on the switch and the electronic parking brake warning light PARK or Ⓟ (red) will illuminate.

To release: With the power switch in the ON position, depress the brake pedal and push the parking brake switch down. The indicator light and the electronic parking brake warning light (red) will turn off.

Before driving, check that the electronic parking brake warning light (red) turns off. For additional information, see "Warning lights, indicator lights and audible reminders" (P.159).

NOTE:

- **While the electronic parking brake is applied or released, an operating sound is heard from the lower side of the rear seat. This is normal and does not indicate a malfunction.**

- **When the electronic parking brake is frequently applied and released in a short period of time, the electronic parking brake system warning light may blink and the electronic parking brake may not operate in order to prevent the electronic parking brake system from overheating. If this occurs, operate the parking brake switch again after waiting approximately 1 minute.**

- **If the electronic parking brake must be applied while driving in an emergency, pull up and hold the parking brake switch. When you release the parking brake switch, the electronic parking brake will be released.**

- **While pulling up the parking brake switch during driving, the electronic parking brake is applied and a chime sounds. The electronic parking brake warning light (red) and the indicator light on the parking brake switch illuminate. This does not indicate a malfunction. The electronic parking brake warning light (red) and the indicator light on the parking brake switch will turn off when the electronic parking brake is released.**

- **When pulling the parking brake switch up with the power switch in the OFF position, the indicator light on the parking brake switch will continue to illuminate for a short period of time.**

BASIC INFORMATION

The automatic brake hold function maintains the braking force without the driver having to depress the brake pedal when the vehicle is stopped at a traffic light or intersection. As soon as the driver depresses the accelerator pedal again, the automatic brake hold function is deactivated and the braking force is released. The operating status of the automatic brake hold function can be displayed. (See "Warning lights, indicator lights and audible reminders" (P.159).)

WARNING

- **The automatic brake hold function is not designed to hold the vehicle on a steep hill or slippery road. Never use the automatic brake hold function when the vehicle is stopped on a steep hill or slippery road. Failure to do so may cause the vehicle to move.**
- **Warnings may appear to request that the driver retake control by depressing the brake pedal.**
- **When the automatic brake hold function is activated but fails to maintain the vehicle at a standstill, depress the brake pedal to stop the vehicle. If the vehicle unexpectedly moves due to outside conditions, the chime may sound and warnings may appear.**
- **Be sure to deactivate the automatic brake hold function when using a drive-thru car wash, towing your vehicle or overloaded.**
- **Make sure the vehicle is in the P (Park) position and apply the electronic parking brake when parking your vehicle, riding on or off the vehicle, or loading or unloading luggage. Failure to do so could cause the vehicle to move or roll away unexpectedly and result in serious personal injury or property damage.**
- **If any of the following conditions occur, the automatic brake hold function may not function. Have the system checked promptly. It is recommended that you visit a NISSAN certified LEAF dealer for this service.**
  - **A warning message appears.**
  - **The indicator light on the automatic brake hold switch does not illuminate when the switch is pushed.**

  Failure to operate the vehicle in accordance with these conditions could cause the vehicle to move or roll away unexpectedly and result in serious personal injury or property damage.
- **The automatic brake hold function will not be activated if the slip indicator light, electronic parking brake warning light, brake system warning light (yellow), or master warning light illuminates and the Chassis control system Error warning message appears.**
- **The automatic brake hold function is operated by applying sufficient brake force to hold the vehicle in its place, so there are cases when this hold function is maintained even if the accelerator pedal is depressed. In this situation, it is advised to depress the brake pedal first, then to turn off the automatic brake hold switch. This will cancel the hold function.**

- **To maintain the braking force to keep the vehicle to a standstill, a noise may be heard. This is not a malfunction.**

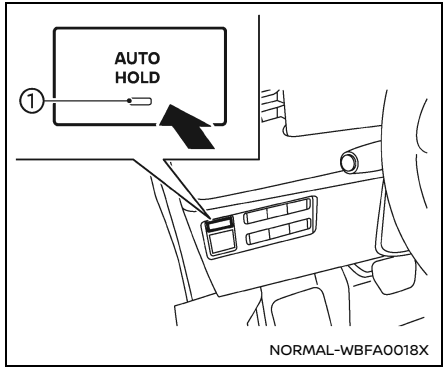

1. With the power switch in the ON position, push the automatic brake hold switch. The indicator light ① on the automatic brake hold switch illuminates.
2. When the automatic brake hold function goes into standby, the automatic brake hold indicator light (white) illuminates.

HOW TO ACTIVATE/DEACTIVATE THE AUTOMATIC BRAKE HOLD FUNCTION

How to activate the automatic brake hold function

To use the automatic brake hold function, the following conditions need to be met.

- The driver's seat belt is fastened.
- The electronic parking brake is released.
- The vehicle is not in the P (Park) position.
- The vehicle is not stopped on a steep hill.

NOTE:
The automatic brake hold function retains the last state until the driver changes the option even if the power switch is turned off.

How to deactivate the automatic brake hold function

While the automatic brake hold function is activated, push the automatic brake hold switch to turn off the automatic brake hold indicator light and deactivate the automatic brake hold function. To deactivate the automatic brake hold function while the brake force has been maintained by the automatic brake hold function, depress the brake pedal and push the automatic brake hold switch.

WARNING

Make sure to firmly depress and hold the brake pedal when turning off the automatic brake hold function while the brake force is applied. When the automatic brake hold function is deactivated, the brake force will be released. This could cause the vehicle to move or roll away unexpectedly.

Failure to prevent the vehicle from rolling may result in serious personal injury or property damage.

HOW TO USE THE AUTOMATIC BRAKE HOLD FUNCTION

Basic information

For additional information on using the automatic brake hold function, refer to the instructions outlined in this section.

To maintain braking force automatically

With the automatic brake hold function activated and the automatic brake hold indicator light (white) illuminated, depress the brake pedal to stop the vehicle, and the indicator light (green) illuminates. The brake force is automatically applied without your foot depressed on the brake pedal. While the brake force is maintained, the automatic brake hold indicator light (green) illuminates.

NOTE:
The automatic brake hold indicator light (green) will not illuminate if the brake pedal is not depressed with sufficient force to hold the vehicle or is released too quickly when the vehicle is stopped.

CAUTION

Confirm the automatic brake hold indicator light (green) is illuminated before removing your foot from the brake pedal.

To start the vehicle from a standstill

With the vehicle not in the P (Park) or the N (Neutral) position, depress the accelerator pedal while the brake force is maintained. The brake force will automatically be released to restart the vehicle. The automatic brake hold indicator light (white) illuminates and the automatic brake hold function returns to standby.

Parking

When the vehicle is in the P (Park) position with the brake force maintained by the automatic brake hold function, the electronic parking brake will automatically be applied and the brake force of the automatic brake hold will be released. The automatic brake hold indicator light turns off. When the electronic parking brake is applied with the brake force maintained by the automatic brake hold function, the brake force of the automatic brake hold will be released. The automatic brake hold indicator light turns off.

NOTE:

- **Under the following conditions, the electronic parking brake will automatically be applied and the brake force of the automatic brake hold will be released (the automatic brake hold indicator light turns off):**
  - **The braking force is applied by the automatic brake hold function for 3 minutes or longer.**
  - **The vehicle is in the P (Park) position.**
  - **The electronic parking brake is applied manually.**
  - **The driver's seat belt is unfastened.**
  - **The driver's door is opened.**
  - **The power switch is placed in the OFF position.**
  - **A malfunction occurs in the automatic brake hold function.**

- **When the vehicle stops, but the brake force is not automatically applied, depress the brake pedal firmly until the automatic brake hold indicator light (green) illuminates.**
- **When the vehicle stops on a slope, depress the brake pedal firmly until the automatic brake hold indicator light (green) illuminates.**

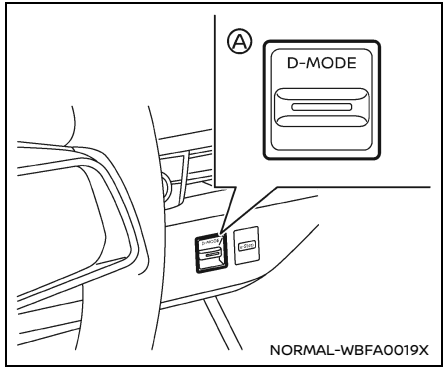

Drive Mode Selector

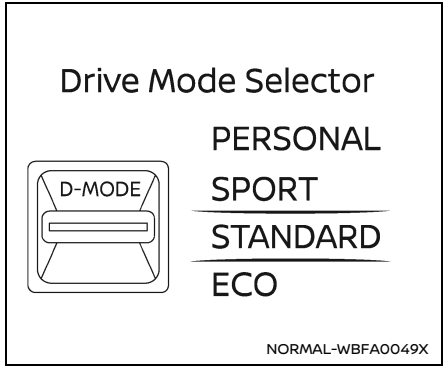

Vehicle information display

BASIC INFORMATION

Multiple driving modes can be selected by using the Drive Mode Selector as below.

PERSONAL, SPORT, STANDARD and ECO

To change the mode, push up or down the Drive Mode Selector Ⓐ.

NOTE:
When the Drive Mode Selector selects a mode, the mode may not switch immediately. This is not a malfunction.

The current mode is displayed in the vehicle information display. The mode list will appear in the vehicle information display and you can select the mode.

NOTE:
The mode list will be turned off in approximately 5 seconds after the mode is selected.

You can also clear the message by pushing the scroll dial on the steering-wheel-mounted controls.

If the driving mode cannot be switched using the Drive Mode Selector when the power switch is in the ON position, have the system checked. It is recommended you visit a NISSAN certified LEAF dealer for this service.

NOTE:
- **The drive mode selector retains the last state until the driver changes the**

option even if the power switch is turned off.

- **The regenerative braking intensity follows the operation of the paddle selector (If so equipped). (See "Manually selectable regenerative braking intensity (if so equipped)" (P.348).)**

⚠ WARNING

- **Do not stare at the Drive Mode Selector or the display while driving so that full attention may be given to vehicle operation.**
- **Avoid abrupt acceleration, steering or sudden braking especially on slippery roads. Otherwise tire slip, skid or tail-swing occurs; this may cause an accident.**

PERSONAL MODE

In PERSONAL mode, you can set the original drive mode of your own.

Depending on your preference, you can set each of the driving elements in the vehicle information display.

Perform the following steps to set the elements of the PERSONAL mode.

1. Push the ◀ ▶ button until "Settings" appears in the vehicle information display and then push the scroll dial. Use the scroll dial to select "Vehicle Settings". Then push the scroll dial.
2. Select "Personal Drive Mode" and push the scroll dial.
3. Select your favorite items and choose the settings for each item.

See "Personal Drive Mode:" (P.176) for the details on each item.

Up to 6 user settings can be stored. Each user setting is linked to a specific Intelligent Key.

SPORT MODE

- Provides higher motor torque response for agile driveability and stronger regeneration brake for sporty drive by acceleration pedal only.
- The setting of the steering system is adjusted to moderately increase steering wheel effort for a sporty feel.

NOTE:
In the SPORT mode, energy economy may be reduced.

STANDARD MODE

This is the normal mode that is most suitable for normal driving.

ECO MODE

Basic information

Improves energy efficiency and cruisingrange.

NOTE:
Selecting the ECO mode will not necessarily improve energy economy as many driving factors influence its effectiveness.

Operation

Select the ECO mode using the Drive Mode Selector. The ECO indicator illuminates.

Tire Pres ECO advice

The "Tire Pres ECO advice" is a function to show an ECO advice message in the vehicle information display when low tire pressure is detected. To activate or deactivate this function, see "ECO Mode Setting" (P.175).

When the setting is ON, the ECO Drive Report display shows "Check Tire Pressures for Best Energy Economy". You can switch the display to the Tire Pressures display by pushing the ◀ ▶ button on the steering wheel.

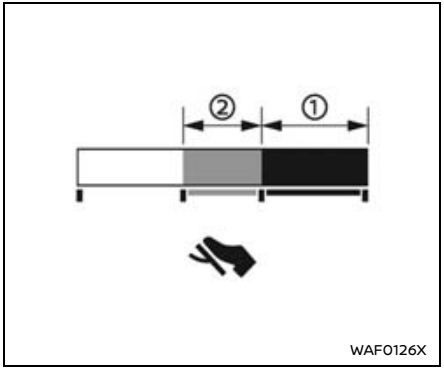

ECO Pedal Guide function

The ECO Pedal Guide display can be selected in the vehicle information display in the ECO mode. (See "ECO Pedal Guide" (P.196).) Use the ECO Pedal Guide function for improving energy economy.

When the ECO Pedal Guide bar is in the green range ①, it indicates that the vehicle is being driven within range of the super economy drive.

When the ECO Pedal Guide bar is in the light green range ②, it indicates that the vehicle is being driven within range of the economy drive.

If the ECO Pedal Guide bar is out of the green range (① and ②), it indicates that the accelerator pedal is depressed over the range of economy drive.

The ECO Pedal Guide bar is not displayed when:

- The vehicle speed is less than approximately 2 MPH (4 km/h).
- The shift button is in the P (Park), N (Neutral) or R (Reverse) position.

BASIC INFORMATION

Each Driver Assistance system is designed to help the driver in different ways as they drive. The following Driver Assistance systems (if so equipped) are available on this vehicle:

Forward Driving Aids
• Automatic Emergency Braking (AEB) with Pedestrian Detection OFF Assists the driver with a warning and/or braking operation when there is a risk of a forward collision with the vehicle ahead in the traveling lane, or with a pedestrian. P.429
• Intelligent Forward Collision Warning (I-FCW) Helps alert the driver when there is a sudden braking of a second vehicle traveling in front of the vehicle ahead in the same lane. P.442

Side Driving Aids (Lane and Blind Spot)
• Lane Departure Warning (LDW) Warns the driver that the vehicle is about to cross a lane marker with an indicator and a steering wheel vibration. P.372

- Intelligent Lane Intervention (I-LI)

Warns the driver that the vehicle is about to cross a lane marker with an indicator and a steering wheel vibration.
Assists the driver to return the vehicle to the center of the traveling lane. P.377

- Blind Spot Warning (BSW)

Warns the driver of a vehicle in an adjacent lane when changing lanes with an indicator. P.383

- Intelligent Blind Spot Intervention (I-BSI)

Warns the driver of a vehicle in an adjacent lane when changing lanes.
Assists the driver to return the vehicle to the center of the traveling lane. P.391

Rear Driving Aids

- Rear Cross Traffic Alert (RCTA)

Assists the driver when backing out from a parking space by detecting other vehicles approaching from the right or left of the vehicle. P.402

Rear Driving Aids

- Rear Automatic Braking (RAB)

OFF

Assists the driver when the vehicle is backing up and approaching stationary objects directly behind the vehicle by providing a warning and automatic braking if needed. P.453

Parking Aids

- Intelligent Around View® Monitor

Assists the driver in parking situations by showing various views of the position of the vehicle in a split screen format. P.298

- Moving Object Detection (MOD)

Informs the driver of moving objects near the vehicle in parking situations. P.313

- Sonar system

Informs the driver with a visual and audible alert of stationary obstacles near the bumpers. P.470

- Rear Sonar System (RSS)

Informs the driver with a visual and audible alert of stationary obstacles to the rear of the vehicle when the shift position is in the R (Reverse). P.476

ProPILOT Assist

- ProPILOT Assist

Consists of Intelligent Cruise Control (ICC) and Steering Assist. P. 409

ProPILOT Assist

- Intelligent Cruise Control (ICC)

Helps the driver maintain a selected distance from the vehicle ahead and can reduce the speed to match a slower vehicle ahead. Decelerates the vehicle to a standstill when a vehicle ahead slows to a stop. P. 420

- Steering Assist

Assists the driver to help keep the vehicle within the center of the traveling lane.

Other Driving Aids

- High beam assist

Switches the headlights to the low beam automatically when an oncoming vehicle or leading vehicle appears in front of your vehicle. P.219

- Traffic Sign Recognition (TSR)

LIMIT 40

Provides the driver with information about the most recently detected speed limit. P.368

- Intelligent Driver Alertness (I-DA)

Helps alert the driver when a lack of attention or driving fatigue is detected. P.450

Other Driving Aids
• Hill Start Assist Helps prevent the vehicle from rolling backwards in the time it takes the driver to release the brake pedal and apply the accelerator when the vehicle is stopped on a hill. P.469

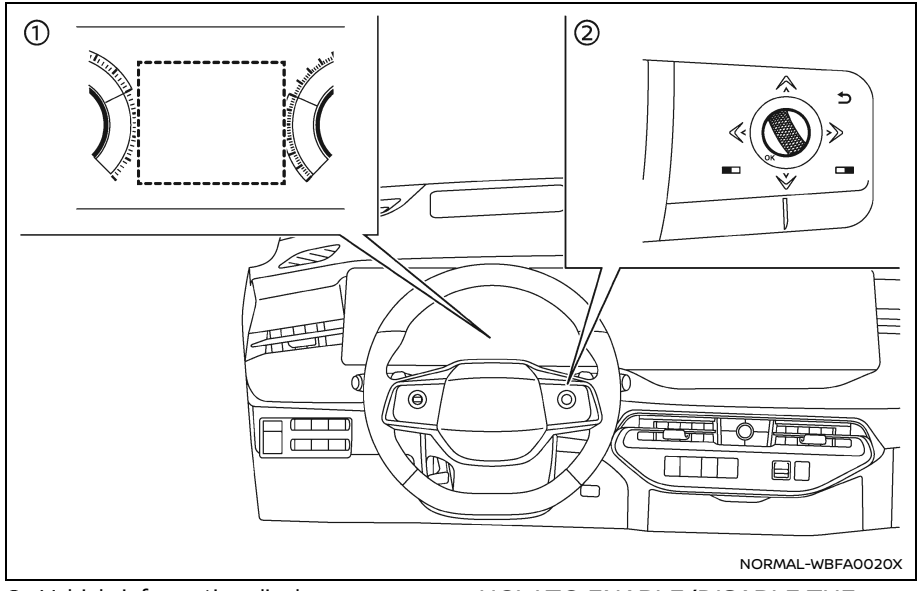

① Vehicle information display
② Steering-wheel-mounted controls (right side)

HOW TO ENABLE/DISABLE THE SYSTEMS

Basic information

The following systems (if so equipped) can be enabled or disabled using the settings menu in the vehicle information

display. Select each setting item using the scroll dial on the steering-wheel-mounted controls.

- Automatic Emergency Braking (AEB) with Pedestrian Detection
- Intelligent Forward Collision Warning (I-FCW)
- Lane Departure Warning (LDW)
- Intelligent Lane Intervention (I-LI)
- Blind Spot Warning (BSW)
- Intelligent Blind Spot Intervention (I-BSI)
- Steering Assist
- Rear Cross Traffic Alert (RCTA)
- Rear Automatic Braking (RAB)
- Moving Object Detection (MOD)
- Sonar system
- Rear Sonar System (RSS)
- Traffic Sign Recognition (TSR)
- Intelligent Driver Alertness (I-DA)

Driver Assistance display

The Driver Assistance display appears in the vehicle information display when selected using the scroll dial, or for a short period of time when the ProPILOT Assist switch is pushed.

The status of the following systems can be shown in each zone of the display.

Zone	Driving Aid
Forward	Automatic Emergency Braking (AEB) with Pedestrian Detection
	Intelligent Forward Collision Warning (I-FCW)
Lane	Lane Departure Warning (LDW)
	Intelligent Lane Intervention (I-LI)
Blind Spot	Blind Spot Warning (BSW)
	Intelligent Blind Spot Intervention (I-BSI)

- When any of the "Warning" systems are enabled, the "🔊" mark is shown in each zone.
- When any of the "Intervention" systems are enabled, the " " mark is shown in each zone.
- When no system is enabled, "OFF" is shown in each zone.

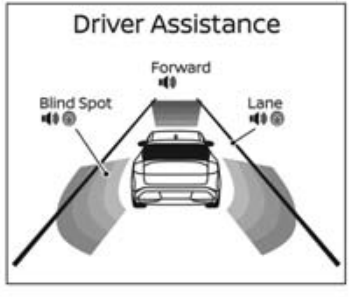

NORMAL-WBFA0054X

Example (all enabled)

DRIVER ASSISTANCE TROUBLE-SHOOTING GUIDE

Basic information

Some of the Driver Assistance systems use the common parts (camera, radar, sonar, etc.) to function. When a pop-up warning message appears in the vehicle information display or the warning light flashes/illuminated, check the system conditions.

For system temporarily unavailable

It is important to ensure the radar sensors, cameras and sonar sensors are clean before each drive. Unclear or damaged cameras and sensors, as well as environmental conditions can affect system performance. See "Camera, radar and sonar locations" (P.367) for detailed locations.

Forward Driving Aids temporarily disabled Front Sensor blocked See Owner's Manual	• Condition A: Poor weather conditions including heavy rain, snow, fog, etc • Condition B: Front radar sensor is obstructed due to dirt, snow, ice, etc • Condition C: Roads with limited structures or buildings (barren) • Clean the front radar area of the vehicle to remove any obstruction • Systems will automatically resume once conditions no longer exist. Intervention systems will need to be reactivated. • Systems Affected: ICC
Driving Aids Temporarily disabled Clean sensor area See Owner's Manual	• AEB system OFF warning light will illuminate • Condition A: Poor weather conditions including heavy rain, snow, fog, etc • Condition B: Front radar sensor or front camera area is obstructed due to dirt, snow, ice, etc • Condition C: Roads with limited structures or buildings (barren) • Clean the front radar area of the vehicle to remove any obstruction • Systems will automatically resume once conditions no longer exist. Intervention systems will need to be reactivated. • Systems Affected: I-FCW and AEB with Pedestrian Detection
Unavailable - Side Radar Obstruction	• Side radar sensor is obstructed due to dirt, snow, ice, etc • Clean the side radar area of the vehicle to remove any obstruction • Systems Affected: BSW, I-BSI and RCTA
Unavailable - Camera Temperature High	• Direct sunlight to camera or high cabin temperature • When the interior cabin temperature is reduced, systems will resume automatically. Intervention systems will need to be reactivated. • Systems Affected: LDW, I-LI, I-BSI and Steering Assist
Unavailable Low Visibility	• Poor camera visibility caused by direct sunlight or camera obstruction due to fog, ice, or condensation in camera housing • Clean windshield glass around camera area using wipers and defrost function • Systems Affected: Steering Assist

Currently Unavailable	• VDC system is turned off • Ensure VDC is active • Systems Affected: I-LI, I-BSI, and ICC
Unavailable Slippery Road	• Systems become unavailable because the road is slippery. • Systems Affected: ProPILOT Assist
Unavailable Seatbelt is Unfastened	• ProPILOT Assist cannot be used when the driver's seat belt is not fastened. • Fasten the driver's seat belt to use ProPILOT Assist.
Unavailable Adverse Weather	• Steering Assist will be canceled. • Condition A: When the wiper (HI) operates • Condition B: When lane markers in the traveling lane cannot be correctly detected
Steering Assist Not Available Cannot Detect Lane	• Steering Assist will be canceled when the lane markers in the traveling lane cannot be correctly detected. • A snow rut, reflection of light on a rainy day or several unclear lane markers are present.
Unavailable Parking Brake is ON	• ProPILOT Assist will be canceled when the electronic parking brake is applied. • The system cannot be used when the electronic parking brake is activated.
Step on Brake Now	• While the vehicle is stopped by ProPILOT Assist, the driver's door is opened but the electronic parking brake was not activated. • Step on the brake pedal immediately.
Limited driver's aid VDC setting OFF	• AEB light will also illuminate • VDC system is turned off. • Turn back on VDC system • System Affected: AEB with Pedestrian Detection
AEB system OFF warning light illumination	• VDC system is turned off. • Turn back on VDC system • System Affected: AEB with Pedestrian Detection

AEB system OFF warning light illumination	• Interference from an unknown radar source • Camera high temperature • Poor camera visibility due to dirt on the lens • Systems will automatically resume once conditions no longer exist. Intervention systems will need to be reactivated. • Systems Affected: I-FCW and AEB with Pedestrian Detection
Driving Aids temporarily limited Front Camera Too Hot	• Camera high temperature • Systems Affected: AEB with Pedestrian Detection
Driving Aids Temporarily limited Poor Visibility	• Poor weather conditions • When strong light, such as sunlight or high beams from oncoming vehicles, enters camera • Systems Affected: AEB with Pedestrian Detection
Driving Aids Temporarily limited Radar interference	• Interference from another radar source • Systems Affected: AEB with Pedestrian Detection and I-FCW
Driving Aids temporarily limited	• When the system check for the warning function did not end normally • When the vehicle is towed • Systems Affected: AEB with Pedestrian Detection
Rear Automatic Braking (RAB) light illumination (no message)	• The transmission is placed in the R position while VDC system is off. • Turn back on VDC system.
Rear Automatic Braking (RAB) light flashing (no message)	• Affected by sonar sound waves • RAB system will automatically resume once conditions no longer exist.

For system malfunction

If any of the following malfunction warnings appear (orange), stop the vehicle in a safe location. Turn the EV system off, restart the EV system. If the warning message/light continue to illuminate, it may be a malfunction. It is recommended that you visit a NISSAN certified LEAF dealer for service.

Malfunction - See Owner's Manual	• Systems Affected: TSR, LDW, I-LI, BSW, I-BSI, ProPILOT Assist, Steering Assist, I-DA and RCTA
Malfunction - See Owner's Manual and AEB system OFF warning light illumination	• Systems Affected: AEB with Pedestrian Detection and I-FCW
Malfunction - See Owner's Manual and RAB system OFF warning light illumination	• System Affected: Rear Automatic Braking (RAB)
Parking Sensor Error - See Owner's Manual	• Systems Affected: Sonar system

Camera, radar and sonar locations

The camera, radar and sonar that are used by each Driver Assistance systems are located on the front and rear of the vehicle. For the maintenance of each component, see "System maintenance" section in this Owner's Manual for each application system.

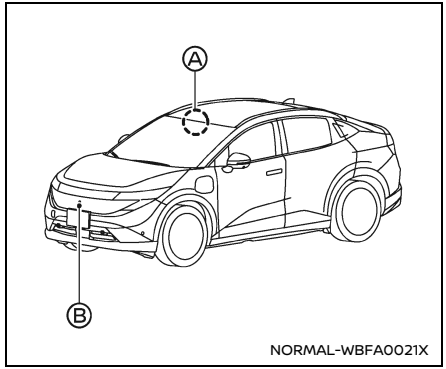

Vehicle front

Ⓐ Front camera unit
- Automatic Emergency Braking (AEB) with Pedestrian Detection
- Lane Departure Warning (LDW)
- Intelligent Lane Intervention (I-LI)
- Intelligent Blind Spot Intervention (I-BSI)
- Steering Assist (as part of ProPILOT Assist Systems)
- High beam assist
- Traffic Sign Recognition (TSR)

Ⓑ Front radar sensor
- Automatic Emergency Braking (AEB) with Pedestrian Detection
- Intelligent Forward Collision Warning (I-FCW)
- Intelligent Cruise Control (ICC) (as part of ProPILOT Assist Systems)

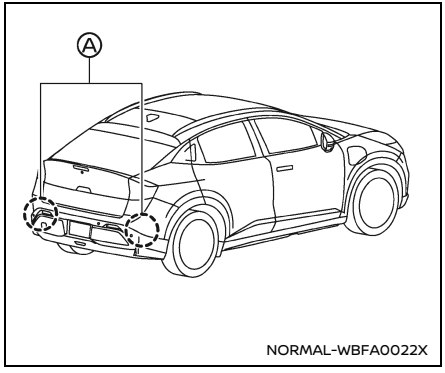

Vehicle rear

Ⓐ Side radar sensor
- Blind Spot Warning (BSW)
- Intelligent Blind Spot Intervention (I-BSI)
- Rear Cross Traffic Alert (RCTA)

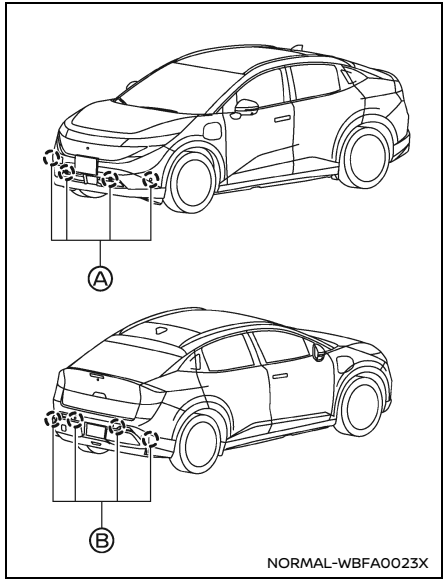

Sonar

Ⓐ Front sonar sensors (if so equipped)
- Sonar system

Ⓑ Rear sonar sensors
- Rear Automatic Braking (RAB)
- Sonar system
- Rear Sonar System (RSS)

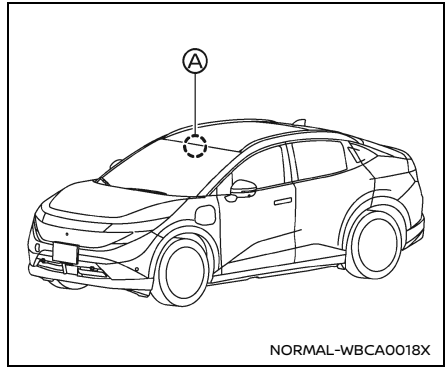

BASIC INFORMATION

The Traffic Sign Recognition (TSR) system provides the driver with information about the most recently detected speed limit. The system captures the road sign information with the multi-sensing front camera unit Ⓐ located on the windshield in front of the inside mirror and displays the detected signs in the vehicle information display. The speed limit displayed is based on a combination of Map locator system data (if so equipped) and live camera recognition. If the vehicle exceeds the speed limit, the system warns the driver by flashing the speed display icon. TSR information is shown in the vehicle infor-

mation display and in the Head Up Display (HUD) (if so equipped). (See "Head Up Display (HUD) (if so equipped)" (P.206).)

WARNING

The TSR system is only intended to be a support device to help provide the driver with information. It is not a replacement for the driver's attention to traffic conditions or responsibility to drive safely. It cannot prevent accidents due to carelessness. It is the driver's responsibility to stay alert and drive safely at all times.

SYSTEM OPERATION

The TSR system displays the following types of road sign:

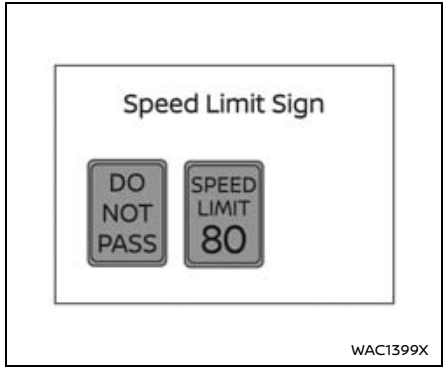

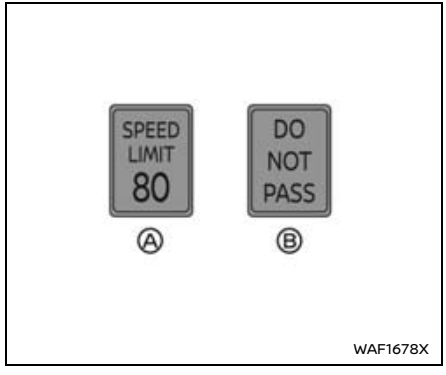

Ⓐ Latest detected speed limit

Ⓑ No passing zone

CAUTION

- **The TSR system is intended as an aid to careful driving. It is the driver's responsibility to stay alert, drive safely, and observe all road regulations that currently apply, including looking out for road signs.**
- **The TSR system may not function properly under all conditions. Below are some examples:**
  - **When the road sign is not clearly visible, for example, due to damage or weather conditions.**
  - **When rain, snow or dirt adheres to the windshield in front of the multi-sensing front camera unit.**
  - **When the headlights are not bright, for example, due to dirt on the lens or if the aiming is not adjusted properly.**
  - **When strong light enters the camera unit. (For example, the light directly shines on the front of the vehicle at sunrise or sunset.)**

- When a sudden change in brightness occurs. (For example, when the vehicle enters or exits a tunnel or under a bridge.)
- In areas not covered by the Map locator system (if so equipped).
- If there are deviations in relation to the navigation, for example due to changes in the road routing.
- When overtaking buses or trucks with speed stickers.
- When the data from the Map locator system (if so equipped) is not up-to-date or is unavailable.

- The TSR system may display a traffic sign, though there is no traffic sign in front of the vehicle. It may display a different speed limit from that for a passenger vehicle. (The maximum speed limit sign may show a higher or lower number than the actual maximum speed, for example, when detecting a speed limit sign for truck, advisory sign, different speed limit sign between daytime and nighttime, or speed limit sign written in different unit near the border, etc.)

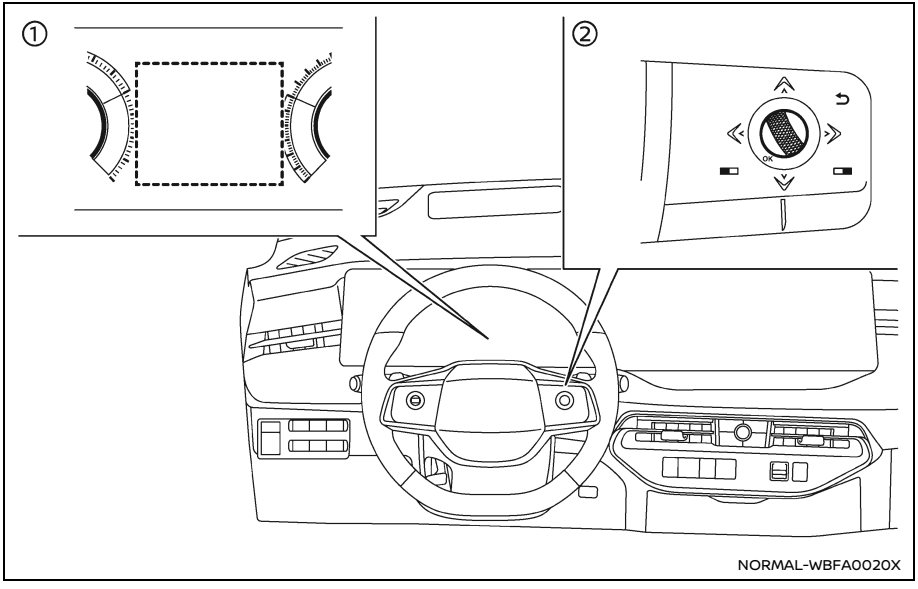

① Vehicle information display
② Steering-wheel-mounted controls (right side)

HOW TO ENABLE/DISABLE THE TSR SYSTEM

Perform the following steps to enable or disable the TSR system:

1. Push the ◀ ▶ button until “Settings” appears in the vehicle information display and then push the scroll dial. Use the scroll dial to select “Driver Assistance”. Then push the scroll dial.
2. Select "Traffic Sign Assist" and push the scroll dial. Then select "Speed Limit Sign" or "Speed Limit Warning" and push the scroll dial to turn the system on or off.

SYSTEM TEMPORARILY UNAVAILABLE

If the vehicle is parked in direct sunlight under high temperature conditions (over approximately 104°F (40°C) and then started, the TSR system may be deactivated automatically.

Action to take:

When the interior temperature is reduced, the TSR system will resume operating automatically.

See "Driver assistance troubleshooting guide" (P.362).

SYSTEM MALFUNCTION

If the TSR system malfunctions it will be turned off automatically and the TSR “Malfunction See Owner’s Manual” warning message will appear in the vehicle information display.

Action to take

If the warning message appears, pull off the road at a safe location and stop the vehicle. Turn the EV system off and restart the EV system. If the warning message continues to appear, have the system checked. It is recommended that you visit a NISSAN certified LEAF dealer.

SYSTEM MAINTENANCE

The TSR system uses the same multi-sensing front camera unit that is used by the Lane Departure Warning (LDW) system, located in front of the inside mirror. For maintenance of the camera, see "System maintenance" (P.376).

BASIC INFORMATION

WARNING

Failure to follow the warnings and instructions for proper use of the LDW system could result in serious injury or death.

- **This system is only a warning device to inform the driver of a potential unintended lane departure. It will not steer the vehicle or prevent loss of control. It is the driver's responsibility to stay alert, drive safely, keep the vehicle in the traveling lane, and be in control of the vehicle at all times.**

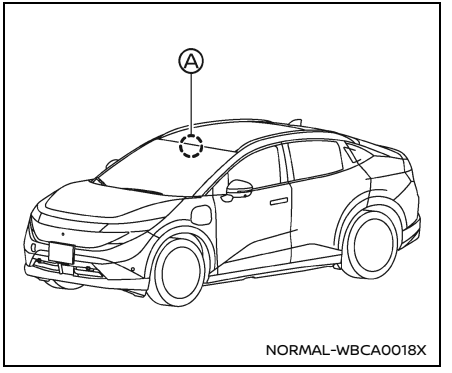

The LDW system will operate when the vehicle is driven at speeds of approximately 37 – 125 MPH (60 – 200 km/h), and the lane markings and road edges are clearly visible on the road.

The LDW system monitors the lane markers on the traveling lane using the camera unit Ⓐ located above the inside mirror.

The LDW system warns the driver that the vehicle is beginning to leave the driving lane with an indicator and a steering wheel vibration. (See "LDW system operation" (P.373).)

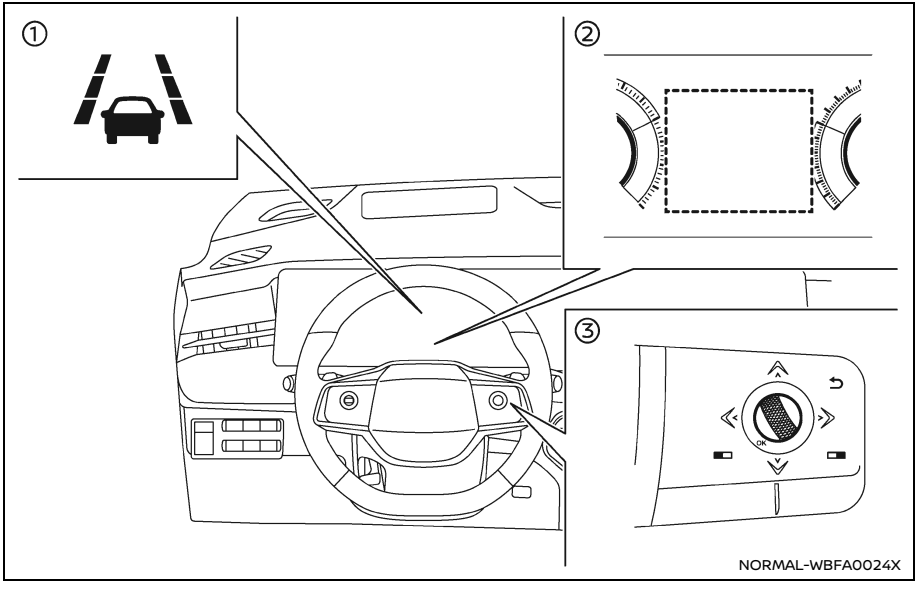

① LDW indicator (on the vehicle information display)

② Vehicle information display

③ Steering-wheel-mounted controls (right side)

LDW SYSTEM OPERATION

The LDW system provides a lane departure warning function when the vehicle is driven at speeds of approximately 37 – 125 MPH (60 – 200 km/h) and the lane markings and road edges are clear. When the vehicle approaches either the left or the right side of the traveling lane, the steering wheel will vibrate and the LDW indicator on the vehicle information display will blink to alert the driver.

The warning function will stop when the vehicle returns inside of the lane markers.

The strength of the steering wheel vibration can be changed in the settings menu of the vehicle information display. (See "Driver Assistance" (P.173).)

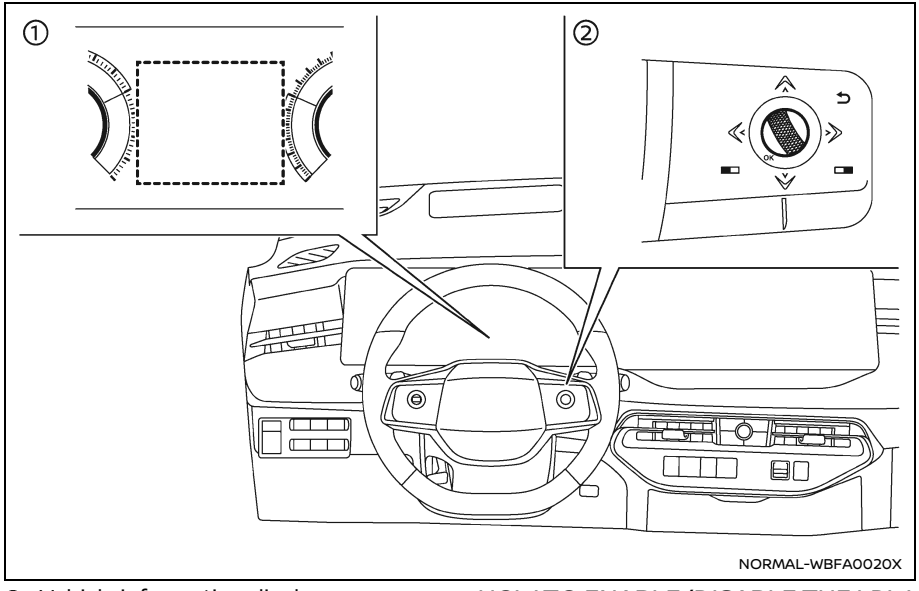

① Vehicle information display
② Steering-wheel-mounted controls (right side)

HOW TO ENABLE/DISABLE THE LDW SYSTEM

Basic information

Perform the following steps to enable or disable the LDW system.

1. Push the ◀ ▶ button until “Settings” appears in the vehicle information display and then push the scroll dial. Use the scroll dial to select “Driver Assistance”. Then push the scroll dial.
2. Select “Lane Assist” and push the scroll dial.
3. Select “Warning” and push the scroll dial.

NOTE:
If you disable the LDW system, the system will remain disabled the next time you start the vehicle's EV system.

Setting lane sensitivity

You can set lane sensitivity using the “Settings” menu in the vehicle information display.

1. Push the ◀ ▶ button until "Settings" appears in the vehicle information display and then push the scroll dial. Use the scroll dial to select "Driver Assistance." Then push the scroll dial.
2. Select "Lane Assist" and push the scroll dial.
3. Select "Lane Sensitivity".

- Strong
- Normal
- Mild

NOTE:
The sensitivity setting will be retained even if the EV system is restarted. This setting is also applied to the Intelligent Lane Intervention (I-LI) system.

LDW SYSTEM LIMITATIONS

WARNING

Listed below are the system limitations for the LDW system. Failure to follow the warnings and instructions for proper use of the LDW system could result in serious injury or death.

- **The system will not operate at speeds below approximately 37 MPH (60 km/h) or if it cannot detect lane markers.**
- **Do not use the LDW system under the following conditions as it may not function properly:**
  - **During bad weather (rain, fog, snow, etc.).**
  - **When driving on slippery roads, such as on ice or snow.**
  - **When driving on winding or uneven roads.**
  - **When there is a lane closure due to road repairs.**
  - **When driving in a makeshift or temporary lane.**
  - **When driving on roads where the lane width is too narrow.**
  - **When driving without normal tire conditions (for example, tire wear, low tire pressure, installation of tire chains or non-standard wheels).**
  - **When the vehicle is equipped with non-original brake parts or suspension parts.**
- **The system may not function properly under the following conditions:**
  - **On roads where there are multiple parallel lane markers; lane markers that are faded or not painted clearly; yellow painted lane markers; non-standard lane markers; or lane markers covered with water, dirt, snow, etc.**
  - **On roads where the edge of the road is not clearly visible.**
  - **On roads where discontinued lane markers are still detectable.**
  - **On roads where there are sharp curves.**
  - **On roads where there are sharply contrasting objects, such as shadows, snow, water, wheel ruts, seams or lines remaining after road repairs. (The LDW system could detect these items as lane markers.)**
  - **On roads where the traveling lane merges or separates.**
  - **When the vehicle's traveling direction does not align with the lane marker.**
  - **When traveling close to the vehicle in front of you, which obstructs the lane camera unit detection range.**
  - **When rain, snow, dirt or object adheres to the windshield in front of the lane camera unit.**
  - **When the headlights are not bright due to dirt on the lens or if the aiming is not adjusted properly.**
  - **When strong light enters the lane camera unit. (For example, the light directly shines on the front of the vehicle at sunrise or sunset.)**

- **When a sudden change in brightness occurs. (For example, when the vehicle enters or exits a tunnel or under a bridge.)**

- **Steering wheel vibration may not be felt depending on the road surface conditions.**

SYSTEM TEMPORARILY UNAVAILABLE

Condition A:

If the vehicle is parked in direct sunlight under high temperature conditions (over approximately 104°F (40°C)) and then started, the LDW system may be deactivated automatically and the following message will appear in the vehicle information display.

- "Unavailable Camera Temperature High"

When the interior temperature is reduced, the LDW system will resume operating automatically.

Condition B:

The warning function of the LDW system is not designed to work under the following conditions:

- When you operate the lane change signal and change traveling lanes in the direction of the signal. (The LDW system will become operable again approximately 2 seconds after the lane change signal is turned off.)
- When the vehicle speed lowers to less than approximately 37 MPH (60 km/h).

Action to take:

After the above conditions have finished and the necessary operating conditions are satisfied, the LDW system will resume.

See "Driver assistance troubleshooting guide" (P.362).

SYSTEM MALFUNCTION

If the LDW system malfunctions, it will cancel automatically and "Malfunction See Owner's Manual" warning message will appear in the vehicle information display. If the warning message appears, pull off the road to a safe location and stop the vehicle. Place the power switch in the OFF position and restart the EV system. If the warning message continues to appear, have the system checked. It is recommended that you visit a NISSAN certified LEAF dealer for this service.

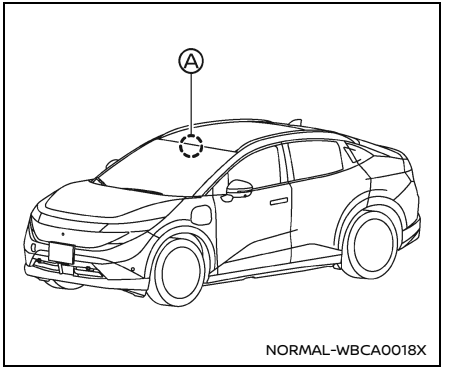

SYSTEM MAINTENANCE

The lane camera unit Ⓐ for the LDW system is located above the inside mirror.

To keep the proper operation of the LDW system and prevent a system malfunction, be sure to observe the following:

- Always keep the windshield clean.
- Do not attach a sticker (including transparent material) or install an accessory near the camera unit.
- Do not place reflective materials, such as white paper or a mirror, on the instrument panel. The reflection of sunlight may adversely affect the

camera unit's capability of detecting the lane markers.

- Do not strike or damage the areas around the camera unit. Do not touch the camera lens or remove the screw located on the camera unit. If the camera unit is damaged due to an accident, it is recommended that you visit a NISSAN certified LEAF dealer.

INTELLIGENT LANE INTERVENTION (I-LI)

BASIC INFORMATION

WARNING

Failure to follow the warnings and instructions for proper use of the I-LI system could result in serious injury or death.

- **The I-LI system will not steer the vehicle or prevent loss of control. It is the driver's responsibility to stay alert, drive safely, keep the vehicle in the traveling lane, and be in control of the vehicle at all times.**
- **The I-LI system is primarily intended for use on well-developed freeways or highways. It may not detect the lane markers in certain road, weather, or driving conditions.**

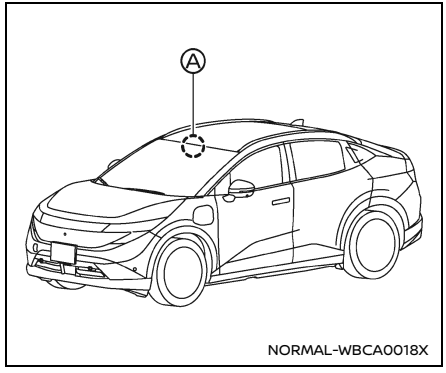

The I-LI system will operate when the vehicle is driven at speeds of approximately 37 – 125 MPH (60 – 200 km/h), and only when the lane markings and road edges are clearly visible on the road. The I-LI system warns the driver when the vehicle has left the center of the traveling lane with an indicator and steering wheel vibration. The system helps assist the driver to return the vehicle to the center of the traveling lane.

The I-LI system monitors the lane markers on the traveling lane using the camera unit Ⓐ located above the inside mirror.

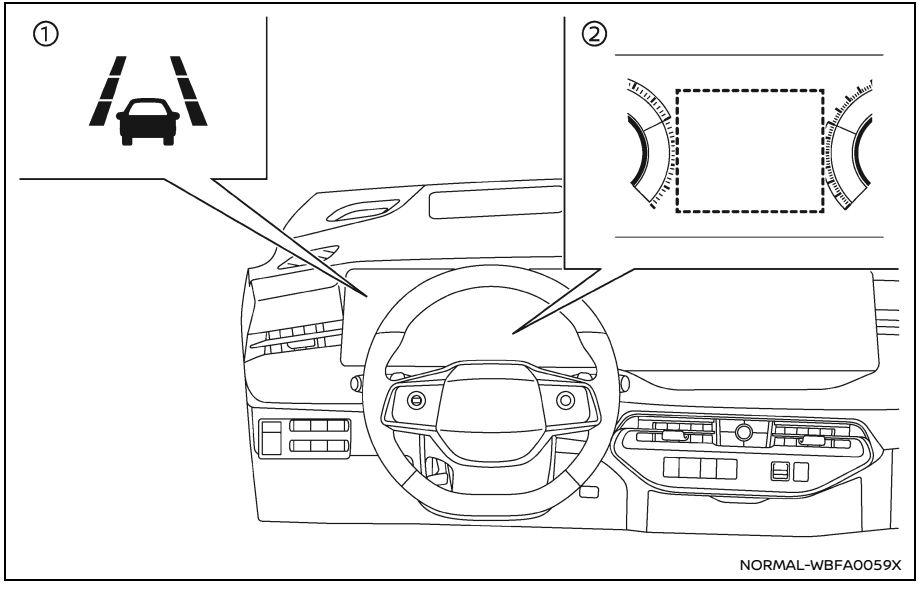

Example

① I-LI indicator (on the vehicle information display)

② Vehicle information display

I-LI SYSTEM OPERATION

The I-LI system operates when the vehicle is driven at speeds of approximately 37 – 125 MPH (60 – 200 km/h) and when the lane markings are clear. When the vehicle approaches either the left or the right side of the traveling lane, steering wheel will vibrate and the I-LI indicator (orange) on the vehicle information display will blink to alert the driver. Then, the I-LI system will help assist the driver to return the vehicle to the center of the traveling lane.

The strength of the steering wheel vibration can be changed in the settings menu of the vehicle information display. (See "Driver Assistance" (P.173).)

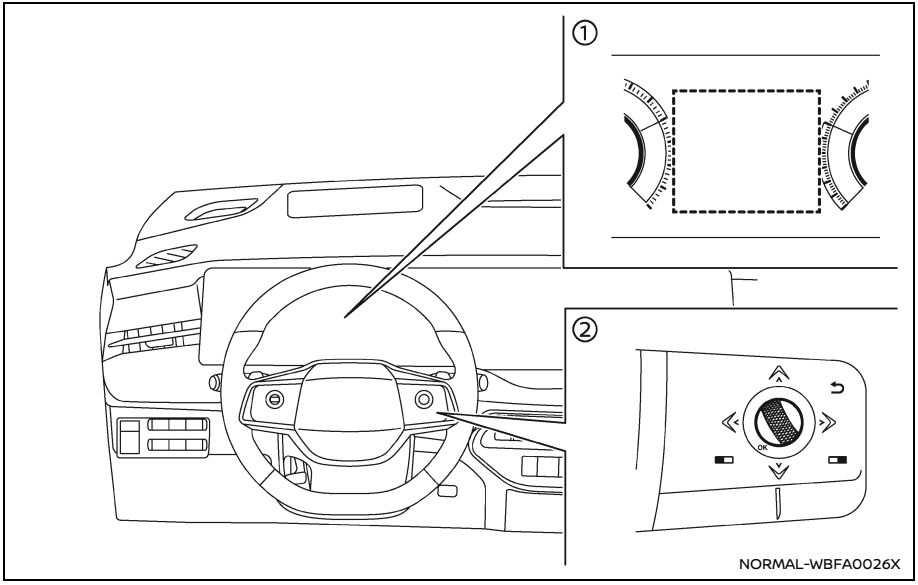

Example

① Vehicle information display
② Steering-wheel-mounted control (right side)

HOW TO ENABLE/DISABLE THE I-LI SYSTEM

Basic information

Perform the following steps to enable or disable the I-LI system.

1. Push the ◀ ▶ button until “Settings” appears in the vehicle information display and then push the scroll dial. Use the scroll dial to select “Driver Assistance.” Then push the scroll dial.
2. Select “Lane Assist” and push the scroll dial.
3. Select “Intervention” and push the scroll dial.

NOTE:
The system will retain current settings in the vehicle information display even if the EV system is restarted.

Setting lane sensitivity

See "Setting lane sensitivity" (P.374).

I-LI SYSTEM LIMITATIONS

⚠ WARNING

Listed below are the system limitations for the I-LI system. Failure to follow the warnings and instructions for proper use of the I-LI system could result in serious injury or death.

- The I-LI system may activate if you change lanes without first activating your turn signal or, for example, if a construction zone directs traffic to cross an existing lane marker. If this occurs you may need to apply corrective steering to complete your lane change.
- Because the I-LI may not activate under the road, weather, and lane marker conditions described in this section, it may not activate every time your vehicle begins to leave its lane and you will need to apply corrective steering.
- The I-LI system will not operate at speeds below approximately 37 MPH (60 km/h) or if it cannot detect lane markers.
- When the I-LI system is operating, avoid excessive or sudden steering maneuvers. Otherwise, you could lose control of the vehicle.
- Do not use the I-LI system under the following conditions as it may not function properly:
  - During bad weather (rain, fog, snow, etc.).
  - When driving on slippery roads, such as on ice or snow.
  - When driving on winding or uneven roads.
  - When there is a lane closure due to road repairs.
  - When driving in a makeshift or temporary lane.
  - When driving on roads where the lane width is too narrow.
  - When driving without normal tire conditions (for example, tire wear, low tire pressure, installation of tire chains or non-standard wheels).
  - When the vehicle is equipped with non-original brake parts or suspension parts.
  - On roads where there are multiple parallel lane markers; lane markers that are faded or not painted clearly; yellow painted lane markers; non-standard lane markers; or lane markers covered with water, dirt, snow, etc.
  - On roads where the edge of the road is not clearly visible.
  - On roads where discontinued lane markers are still detectable.
  - On roads where there are sharp curves.
  - On roads where there are sharply contrasting objects, such as shadows, snow, water, wheel ruts, seams or lines remaining after road repairs. (The I-LI system could detect these items as lane markers.)
  - On roads where the traveling lane merges or separates.
  - When the vehicle's traveling direction does not align with the lane marker.
  - When traveling close to the vehicle in front of you, which obstructs the lane camera unit detection range.
  - When rain, snow or dirt adheres to the windshield in front of the lane camera unit.
  - When the headlights are not bright due to dirt on the lens or if the aiming is not adjusted properly.

- **When strong light enters the lane camera unit. (For example, the light directly shines on the front of the vehicle at sunrise or sunset.)**
- **When a sudden change in brightness occurs. (For example, when the vehicle enters or exits a tunnel or under a bridge.)**

- **Steering wheel vibration may not be felt depending on the road surface conditions.**

SYSTEM TEMPORARILY UNAVAILABLE

Condition A:

The warning and assist functions of the I-LI system are not designed to work under the following conditions:

- When you operate the lane change signal and change the traveling lanes in the direction of the signal. (The I-LI system will be deactivated for approximately 2 seconds after the lane change signal is turned off.)
- When the vehicle speed lowers to less than approximately 37 MPH (60 km/h).

Action to take:

After the above conditions have finished and the necessary operating conditions are satisfied, the warning and assist functions will resume.

Condition B:

The assist function of the I-LI system is not designed to work under the following conditions (warning is still functional):

- When the brake pedal is depressed or if the vehicle decelerates strongly.
- When the steering wheel is turned as far as necessary for the vehicle to change lanes.
- When the vehicle is accelerated during the I-LI system operation.
- When the Intelligent Cruise Control (ICC) approach warning occurs.
- When the hazard warning flashers are operated.
- When driving on a curve at high speed.

Action to take:

After the above conditions have finished and the necessary operating conditions are satisfied, the assist function of the I-LI system will resume.

Condition C:

If the following message appears in the vehicle information display, a chime will sound and the I-LI system will be turned off automatically.

- "Currently Unavailable":
  - When the Vehicle Dynamic Control (VDC) system is turned off.

Action to take:

When the above conditions no longer exist, the assist function of the I-LI system will resume.

Temporary disabled status at high temperature:

If the vehicle is parked in direct sunlight under high temperature conditions (over approximately 104°F (40°C)) and then the I-LI system is turned on, the I-LI system may be deactivated automatically, a chime sounds and the following message will appear on the vehicle information display:

- "Unavailable Camera Temperature High"

When the interior temperature is reduced, the assist function of the I-LI system will resume.

See "Driver assistance troubleshooting guide" (P.362).

SYSTEM MALFUNCTION

If the I-LI system malfunctions, it will cancel automatically. The I-LI indicator (orange) will illuminate, a chime will sound and the "Malfunction See Owner's Manual" warning message will appear in the vehicle information display.

If the I-LI indicator (orange) illuminates, pull off the road to a safe location. Turn the EV system off and restart the EV system. If the I-LI indicator (orange) continues to illuminate, have the I-LI system checked. It is recommended that you visit a NISSAN certified LEAF dealer for this service.

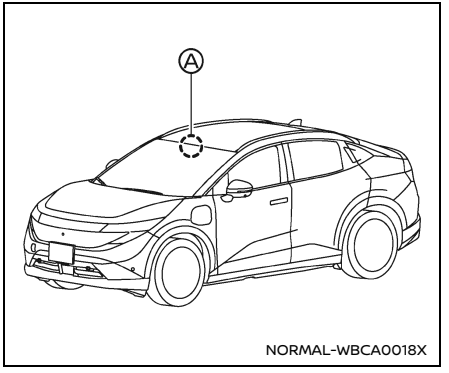

SYSTEM MAINTENANCE

The lane camera unit Ⓐ for the I-LI system is located above the inside mirror. To keep the proper operation of the I-LI system and prevent a system malfunction, be sure to observe the following:

- Always keep the windshield clean.
- Do not attach a sticker (including transparent material) or install an accessory near the camera unit.
- Do not place reflective materials, such as white paper or a mirror, on the instrument panel. The reflection of sunlight may adversely affect the camera unit's capability of detecting the lane markers.
- Do not strike or damage the areas around the camera unit. Do not touch the camera lens or remove the screw located on the camera unit. If the camera unit is damaged due to an accident, it is recommended that you visit a NISSAN certified LEAF dealer.

BLIND SPOT WARNING (BSW)

BASIC INFORMATION

WARNING

Failure to follow the warnings and instructions for proper use of the BSW system could result in serious injury or death.

- **The BSW system is not a replacement for proper driving procedure and is not designed to prevent contact with vehicles or objects. When changing lanes, always use the side and rear mirrors and turn and look in the direction your vehicle will move to ensure it is safe to change lanes. Never rely solely on the BSW system.**

The BSW system helps alert the driver of other vehicles in adjacent lanes when changing lanes.

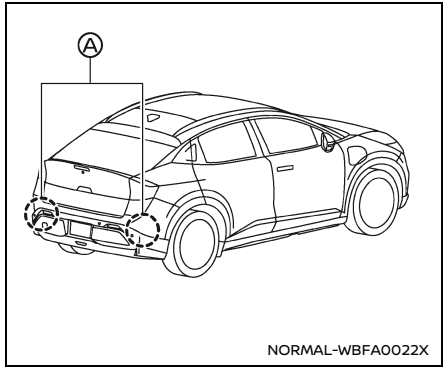

The BSW system uses radar sensors Ⓐ installed near the rear bumper to detect other vehicles in an adjacent lane.

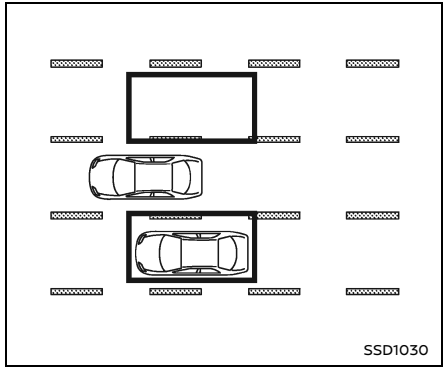

Detection zone

The radar sensors can detect vehicles on either side of your vehicle within the detection zone shown as illustrated. This detection zone starts from the outside mirror of your vehicle and extends approximately 10 ft (3.0 m) behind the rear bumper, and approximately 10 ft (3.0 m) sideways.

The detection zone extends if the vehicle in an adjacent lane is approaching from behind at high speed.

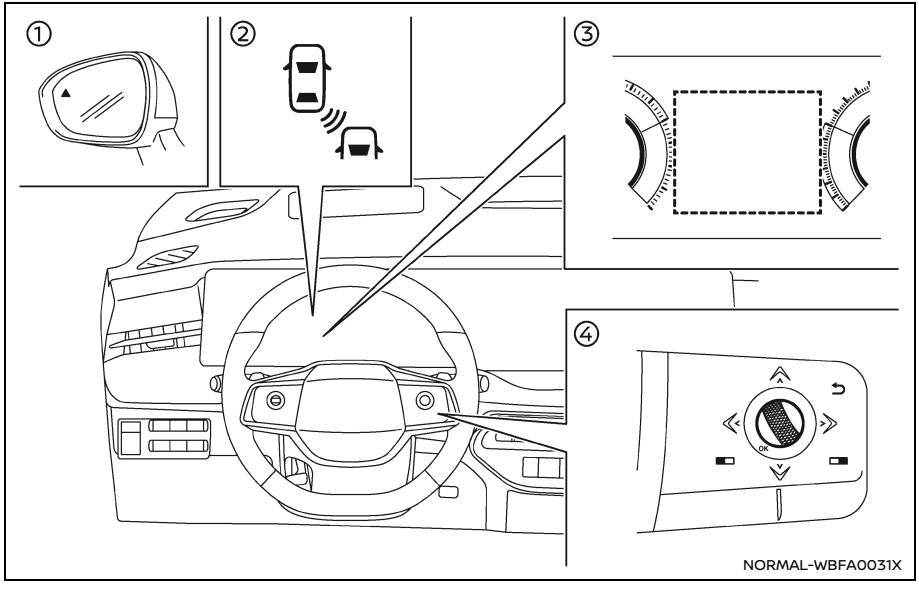

① Side indicator light

② BSW indicator (on the vehicle information display)

③ Vehicle information display

④ Steering-wheel-mounted controls (right side)

BSW SYSTEM OPERATION

The BSW system operates above approximately 20 MPH (32 km/h).

If the radar sensors detect a vehicle in the detection zone, the side indicator light illuminates.

If the turn signal is then activated, the system chimes (twice) and the side indicator light and BSW indicator flash. The side indicator light and BSW indicator continue to flash until the detected vehicle leaves the detection zone.

The side indicator light illuminates for a few seconds when the power switch is placed in the ON position.

The brightness of the side indicator light is adjusted automatically depending on the brightness of the ambient light.

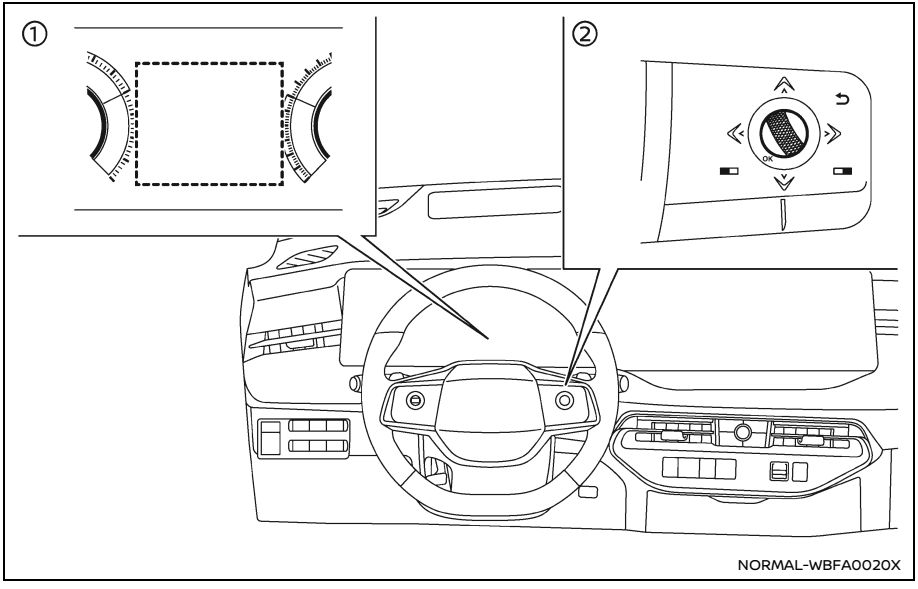

① Vehicle information display
② Steering-wheel-mounted controls (right side)

HOW TO ENABLE/DISABLE THE BSW SYSTEM

Perform the following steps to enable or disable the BSW system.

1. Push the ◀ ▶ button until "Settings" appears in the vehicle information display and then push the scroll dial. Use the scroll dial to select "Driver Assistance". Then push the scroll dial.
2. Select "Blind Spot Assist" and push the scroll dial.
3. Select "Warning" and push the scroll dial.

NOTE:
The system will retain current settings in the vehicle information display even if the EV system is restarted.

BSW SYSTEM LIMITATIONS

⚠ WARNING

Listed below are the system limitations for the BSW system. Failure to operate the vehicle in accordance with these system limitations could result in serious injury or death.

- **The BSW system cannot detect all vehicles under all conditions.**
- **The radar sensors may not be able to detect and activate BSW when certain objects are present such as:**
  - **Pedestrians, bicycles, animals.**
  - **Vehicles such as motorcycles, low height vehicles, or high ground clearance vehicles.**
  - **Oncoming vehicles.**
  - **Vehicles remaining in the detection zone when you accelerate from a stop.**

- A vehicle merging into an adjacent lane at a speed approximately the same as your vehicle.
- A vehicle approaching rapidly from behind.
- A vehicle which your vehicle overtakes rapidly.
- A vehicle that passes through the detection zone quickly.
- When overtaking several vehicles in a row, the vehicles after the first vehicle may not be detected if they are traveling close together.

- The radar sensor's detection zone is designed based on a standard lane width. When driving in a wider lane, the radar sensors may not detect vehicles in an adjacent lane. When driving in a narrow lane, the radar sensors may detect vehicles driving two lanes away.
- The radar sensors are designed to ignore most stationary objects, however objects such as guardrails, walls, foliage and parked vehicles may occasionally be detected. This is a normal operation condition.
- The following conditions may reduce the ability of the radar to detect other vehicles:
  - Severe weather
  - Road spray
  - Ice/frost/dirt build-up on the vehicle
- Do not attach stickers (including transparent material), install accessories or apply additional paint near the radar sensors. These conditions may reduce the ability of the radar to detect other vehicles.
- Excessive noise (for example, audio system volume, open vehicle window) will interfere with the chime sound, and it may not be heard.

BSW DRIVING SITUATIONS

Basic information

Indicator on	●
Indicator off	○
Indicator flashing	◉

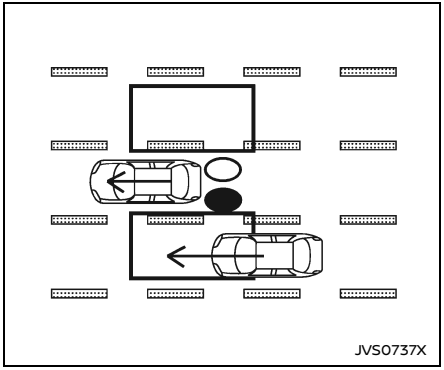

Illustration 1 – Approaching from behind

Another vehicle approaching from behind

Illustration 1: The side indicator light illuminates if a vehicle enters the detection zone from behind in an adjacent lane.

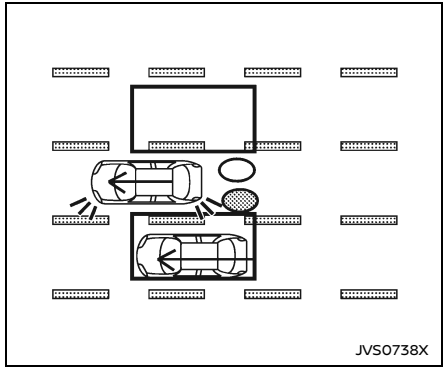

Illustration 2 – Approaching from behind

Illustration 2: If the driver activates the turn signal while another vehicle is in the detection zone, then the system chimes (twice) and the side indicator light and BSW indicator flash.

NOTE:

- **The radar sensors may not detect vehicles which are approaching rapidly from behind.**
- **If the driver activates the turn signal before a vehicle enters the detection zone, the side indicator light and BSW indicator will flash but no chime will sound when the other vehicle is detected.**

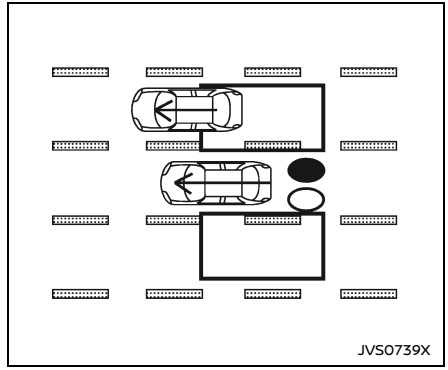

Illustration 3 – Overtaking another vehicle

Overtaking another vehicle

Illustration 3: The side indicator light illuminates if you overtake a vehicle and that vehicle stays in the detection zone for approximately 2 seconds.

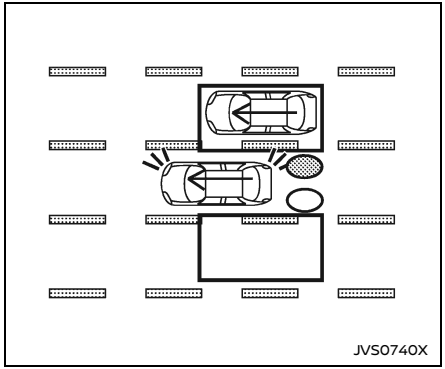

Illustration 4 – Overtaking another vehicle

Illustration 4: If the driver activates the turn signal while another vehicle is in the detection zone, then the system chimes (twice) and the side indicator light and BSW indicator flash.

NOTE:

- **When overtaking several vehicles in a row, the vehicles after the first vehicle may not be detected if they are traveling close together.**
- **The radar sensors may not detect slower moving vehicles if they are passed quickly.**
- **If the driver activates the turn signal before a vehicle enters the detection zone, the side indicator light and BSW indicator will flash but no chime will sound when the other vehicle is detected.**

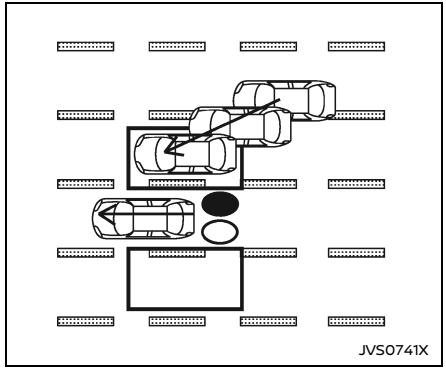

Illustration 5 – Entering from the side

Entering from the side

Illustration 5: The side indicator light illuminates if a vehicle enters the detection zone from either side.

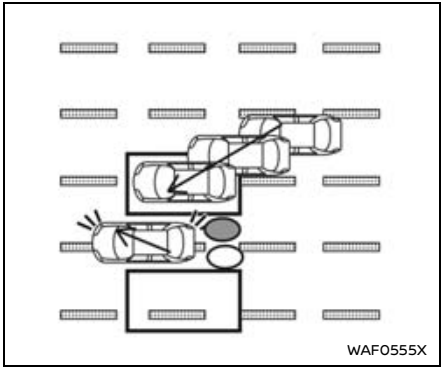

Illustration 6 – Entering from the side

Illustration 6: If the driver activates the turn signal while another vehicle is in the detection zone, then the system chimes (twice) and the side indicator light and BSW indicator flash.

NOTE:

- **The radar sensors may not detect a vehicle which is traveling at about the same speed as your vehicle when it enters the detection zone.**
- **If the driver activates the turn signal before a vehicle enters the detection zone, the side indicator light and BSW indicator will flash but no chime will sound when the other vehicle is detected.**

SYSTEM TEMPORARILY UNAVAILABLE

When radar blockage is detected, the BSW system will be turned off automatically and the "Unavailable Side Radar Obstruction" warning message will appear in the vehicle information display.

The system is not available until the conditions no longer exist.

The radar sensors may be blocked by temporary ambient conditions such as snow, splashing water, mist or fog. The blocked condition may also be caused by objects such as ice, frost or dirt obstructing the radar sensors.

NOTE:

If the BSW system stops working, the Intelligent Blind Spot Intervention (I-BSI) and the Rear Cross Traffic Alert (RCTA) systems will also stop working.

Action to take:

When the above conditions no longer exist, the system will resume automatically.

See "Driver assistance troubleshooting guide" (P.362).

SYSTEM MALFUNCTION

When the BSW system malfunctions, it will be turned off automatically and the "Malfunction See Owner's Manual" warning message will appear in the vehicle information display.

NOTE:

If the BSW system stops working, the Intelligent Blind Spot Intervention (I-BSI) and Rear Cross Traffic Alert (RCTA) systems will also stop working.

Action to take:

Stop the vehicle in a safe location, turn the EV system off and restart the EV system. If the message continues to appear, have the BSW system checked. It is recommended that you visit a NISSAN certified LEAF dealer for this service.

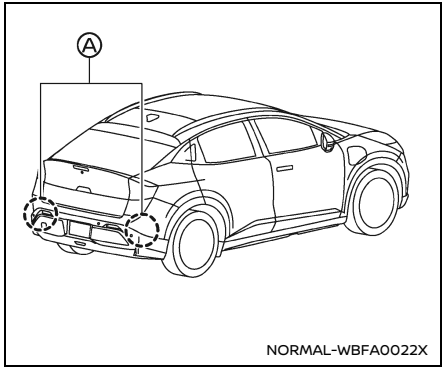

SYSTEM MAINTENANCE

Basic information

The two radar sensors Ⓐ for the BSW system are located near the rear bumper. Always keep the area near the radar sensors clean.

The radar sensors may be blocked by temporary ambient conditions such as snow, splashing water, mist or fog.

The blocked condition may also be caused by objects such as ice, frost or dirt obstructing the radar sensors.

Check for and remove objects obstructing the area around the radar sensors.

Do not attach stickers (including transparent material), install accessories or apply additional paint near the radar sensors.

Do not strike or damage the area around the radar sensors.

See a NISSAN certified LEAF dealer or other authorized repair shop if the area around the radar sensors is damaged due to a collision.

Precautions on repairing the bumper

When repairing the bumper, take caution because the radar sensors are installed on the bumper.

The radar sensor detects objects by emitting a radar signal and then measuring its reflection.

⚠ WARNING

If an improper repair is performed on the bumper (for example, application of putty made from different materials, repaint, etc.) the radar signal could be weakened or prevented from functioning properly. This may cause the radar sensor not to detect objects correctly. Improper repair may result in serious personal injury. If it is necessary to repair the bumper, it is recommended you visit a NISSAN certified LEAF dealer for this service.

Radio frequency statement

NOTE:
FCC Notice:
For USA:
This device complies with Part 15 of the FCC Rules. Operation is subject to the following two conditions: (1) this device may not cause harmful interference, and (2) this device must accept any interference received, including interference that may cause undesired operation.
CAUTION TO USERS:
Changes or modifications not expressly approved by the party responsible for

compliance could void the user's authority to operate the equipment.

For Canada:

This device contains licence-exempt transmitter(s)/receiver(s) that comply with Innovation, Science and Economic Development Canada's licence-exempt RSS(s). Operation is subject to the following two conditions: (1) This device may not cause interference. (2) This device must accept any interference, including interference that may cause undesired operation of the device.

L'émetteur/récepteur exempt de licence contenu dans le présent appareil est conforme aux CNR d'Innovation, Sciences et Développement économique Canada applicables aux appareils radio exempts de licence. L'exploitation est autorisée aux deux conditions suivantes:

1) L'appareil ne doit pas produire de brouillage;

2) L'appareil doit accepter tout brouillage radioélectrique subi, même si le brouillage est susceptible d'en compromettre le fonctionnement.

INTELLIGENT BLIND SPOT INTERVENTION (I-BSI)

BASIC INFORMATION

WARNING

Failure to follow the warnings and instructions for proper use of the I-BSI system could result in serious injury or death.

- **The I-BSI system is not a replacement for proper driving procedures and is not designed to prevent contact with vehicles or objects. When changing lanes, always use the side and rear mirrors and turn and look in the direction your vehicle will move to ensure it is safe to change lanes. Never rely solely on the I-BSI system.**
- **There is a limitation to the detection capability of the radar. Not every moving object or vehicle will be detected. Using the I-BSI system under some road, ground, lane marker, traffic or weather conditions could lead to improper system operation. Always rely on your own operation to avoid accidents.**

The I-BSI system helps alert the driver of other vehicles in adjacent lanes when changing lanes, and helps assist the driver to return the vehicle to the center of the traveling lane.

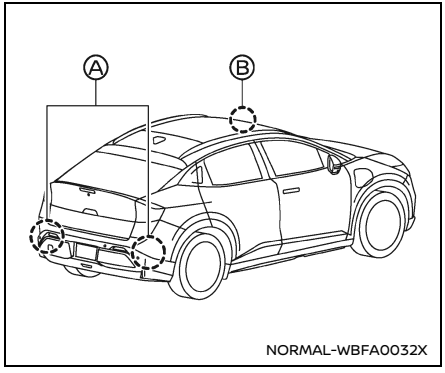

The I-BSI system uses radar sensors Ⓐ installed near the rear bumper to detect other vehicles in an adjacent lane. In addition to the radar sensors, the I-BSI system uses a camera Ⓑ installed behind the windshield to monitor the lane markers of your traveling lane.

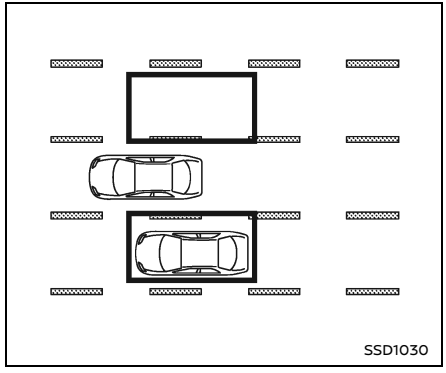

Detection zone

The radar sensors can detect vehicles on either side of your vehicle within the detection zone shown as illustrated.

This detection zone starts from the outside mirror of your vehicle and extends approximately 10 ft (3.0 m) behind the rear bumper, and approximately 10 ft (3.0 m) sideways.

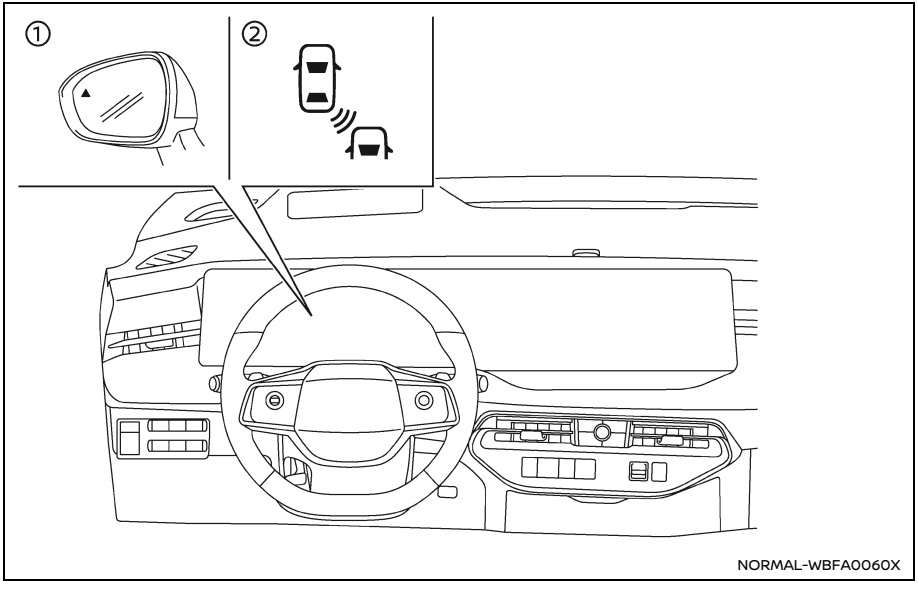

Example

① Side indicator light

② I-BSI indicator (on the vehicle information display)

I-BSI SYSTEM OPERATION

The I-BSI system operates above approximately 37 MPH (60 km/h).

If the radar sensors detect a vehicle in the detection zone, the side indicator light illuminates.

If the turn signal is then activated, the system chimes (twice) and the side indicator light and I-BSI indicator flash. The side indicator light and I-BSI indicator continue to flash until the detected vehicle leaves the detection zone.

If the I-BSI system is ON and your vehicle approaches a lane marker while another vehicle is in the detection zone, the system chimes (three times) and the side indicator light and I-BSI indicator flash. The I-BSI system activates to help return the vehicle back to the center of the driving lane. The I-BSI system operates regardless of turn signal usage.

NOTE:

- **I-BSI warning and system application will only be activated if the side indicator light is already illuminated when your vehicle approaches a lane marker. If another vehicle comes into the detection zone after your vehicle has crossed a lane marker, no I-BSI warning or system application will be activated. (For additional information, see "I-BSI driving situations" (P.396).)**
- **The I-BSI system is typically activated earlier than the Intelligent Lane Intervention (I-LI) system when your vehicle is approaching a lane marker.**

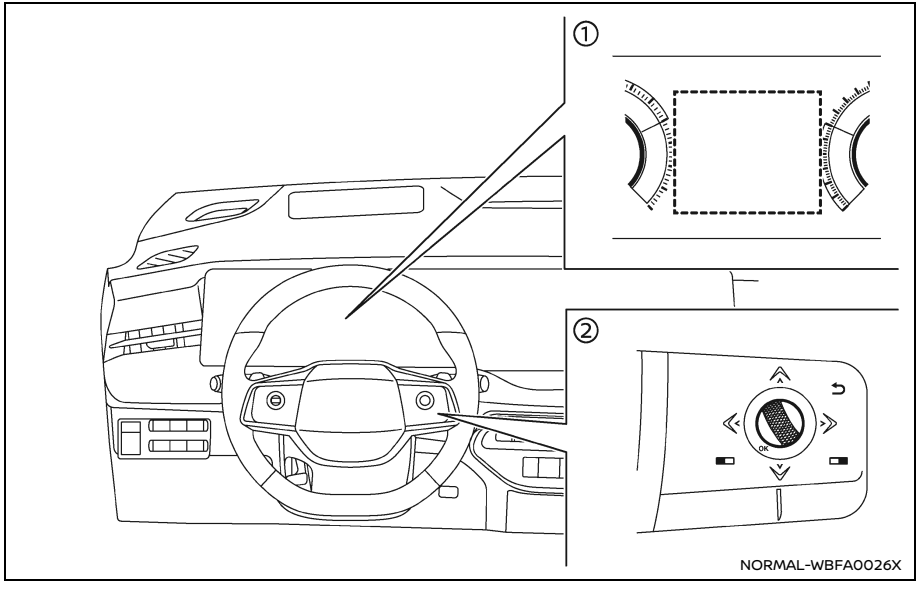

Example

① Vehicle information display
② Steering-wheel-mounted control (right side)

HOW TO ENABLE/DISABLE THE I-BSI SYSTEM

1. Push the ◀ ▶ button until "Settings" appears in the vehicle information display and then push the scroll dial. Use the scroll dial to select "Driver Assistance." Then push the scroll dial.
2. Select "Blind Spot Assist" and push the scroll dial.
3. Select "Intervention" and push the scroll dial.

NOTE:
The system will retain current settings in the vehicle information display even if the EV system is restarted.

I-BSI SYSTEM LIMITATIONS

⚠ WARNING

Listed below are the system limitations for the I-BSI system. Failure to operate the vehicle in accordance with these system limitations could result in serious injury or death.

- **The I-BSI system cannot detect all vehicles under all conditions.**
- **The radar sensors may not be able to detect and activate I-BSI when certain objects are present such as:**
  - **Pedestrians, bicycles, animals.**
  - **Vehicles such as motorcycles, low height vehicles, or high ground clearance vehicles.**
  - **Vehicles remaining in the detection zone when you accelerate from a stop.**

- Oncoming vehicles.
- A vehicle merging into an adjacent lane at a speed approximately the same as your vehicle.
- A vehicle approaching rapidly from behind.
- A vehicle which your vehicle overtakes rapidly.
- A vehicle that passes through the detection zone quickly.

- The radar sensor's detection zone is designed based on a standard lane width. When driving in a wider lane, the radar sensors may not detect vehicles in an adjacent lane. When driving in a narrow lane, the radar sensors may detect vehicles driving two lanes away.
- The radar sensors are designed to ignore most stationary objects, however objects such as guardrails, walls, foliage and parked vehicles may occasionally be detected. This is a normal operation condition.
- The following conditions may reduce the ability of the radar to detect other vehicles:
  - Severe weather
  - Road spray
  - Ice/frost/dirt build-up on the vehicle
- Do not attach stickers (including transparent material), install accessories or apply additional paint near the radar sensors. These conditions may reduce the ability of the radar to detect other vehicles.
- The camera may not detect lane markers in the following situations and the I-BSI system may not operate properly.
  - On roads where there are multiple parallel lane markers; lane markers that are faded or not painted clearly; yellow painted lane markers; nonstandard lane markers; lane markers covered with water, dirt, snow, etc.
  - On roads where discontinued lane markers are still detectable.
  - On roads where there are sharp curves.
  - On roads where there are sharply contrasting objects, such as shadows, snow, water, wheel ruts, seams or lines remaining after road repairs.
  - On roads where the traveling lane merges or separates.
  - When the vehicle's traveling direction does not align with the lane markers.
  - When traveling close to the vehicle in front of you, which obstructs the lane camera unit detection range.
  - When rain, snow or dirt adheres to the windshield in front of a lane camera unit.
  - When the headlights are not bright due to dirt on the lens or if aiming is not adjusted properly.
  - When strong light enters a lane camera unit. (For example: light directly shines on the front of the vehicle at sunrise or sunset.)
  - When a sudden change in brightness occurs. (For example: when the vehicle enters or exits a tunnel or under a bridge.)

- **Do not use the I-BSI system under the following conditions because the system may not function properly.**
  - **During bad weather. (For example: rain, fog, snow, etc.)**
  - **When driving on slippery roads, such as on ice or snow, etc.**
  - **When driving on winding or uneven roads.**
  - **When there is a lane closure due to road repairs.**
  - **When driving in a makeshift or temporary lane.**
  - **When driving on roads where the lane width is too narrow.**
  - **When driving with a tire that is not within normal tire conditions (for example, tire wear, low tire pressure, installation of tire chains or non-standard wheels).**
  - **When the vehicle is equipped with non-original steering parts or suspension parts.**
- **Excessive noise (for example, audio system volume, open vehicle window) will interfere with the chime sound, and it may not be heard.**

I-BSI DRIVING SITUATIONS

Basic information

Indicator on

Indicator off

Indicator flashing

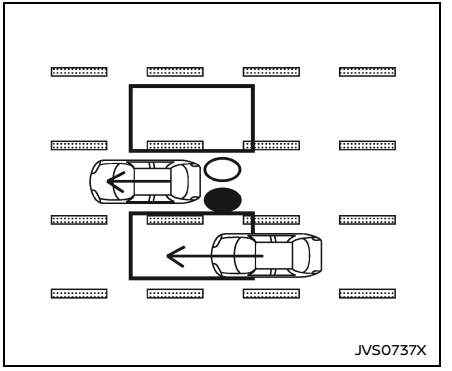

Illustration 1 – Approaching from behind

Another vehicle approaching from behind

Illustration 1: The side indicator light illuminates if a vehicle enters the detection zone from behind in an adjacent lane.

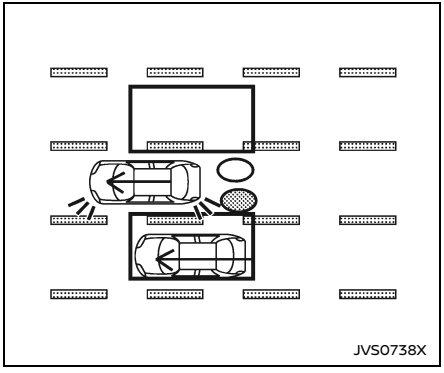

Illustration 2 – Approaching from behind

Illustration 2: If the driver activates the turn signal then the system chimes a sound (twice) and the side indicator light and I-BSI indicator flash.

NOTE:

If the driver activates the turn signal before a vehicle enters the detection zone, the side indicator light and I-BSI indicator will flash but no chime will sound when the other vehicle is detected.

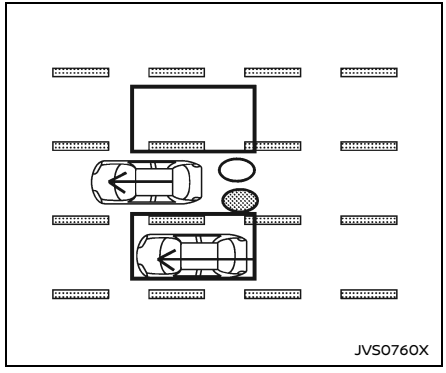

Illustration 3 - Approaching from behind

Illustration 3: If the I-BSI system is on and your vehicle approaches a lane marker while another vehicle is in the detection zone, the system chimes (three times) and the side indicator light and I-BSI indicator flash. The I-BSI system activates to help return the vehicle back to the center of the driving lane.

NOTE:

- **The radar sensors may not detect vehicles which are approaching rapidly from behind.**

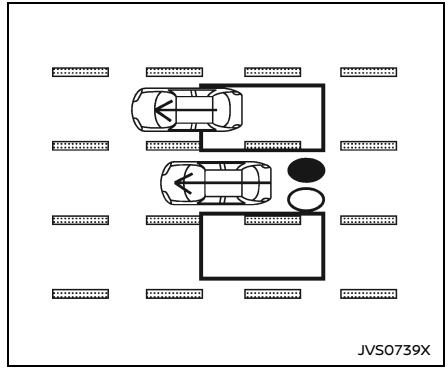

Illustration 4 - Overtaking another vehicle

Overtaking another vehicle

Illustration 4: The side indicator light illuminates if you overtake a vehicle and that vehicle stays in the detection zone for approximately 3 seconds.

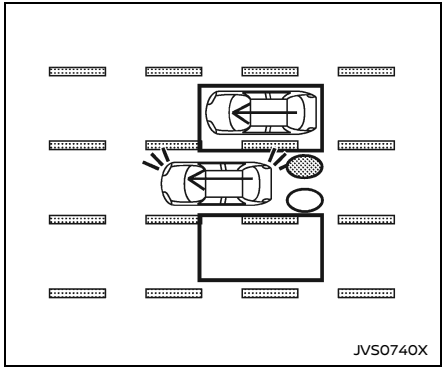

Illustration 5 - Overtaking another vehicle

Illustration 5: If the driver activates the turn signal while another vehicle is in the detection zone, then the system chimes (twice) and the side indicator light and I-BSI indicator flash.

NOTE:

If the driver activates the turn signal before a vehicle enters the detection zone, the side indicator light and I-BSI indicator will flash but no chime will sound when the other vehicle is detected.

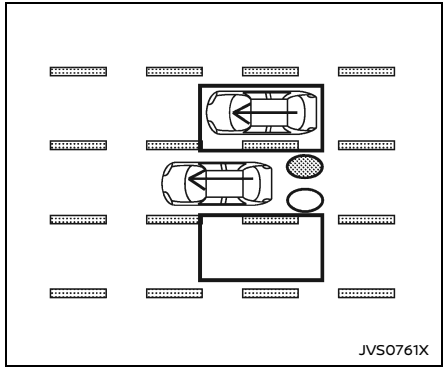

Illustration 6 - Overtaking another vehicle

Illustration 6: If the I-BSI system is on and your vehicle approaches a lane marker while another vehicle is in the detection zone, the system chimes (three times) and the side indicator light and I-BSI indicator flash. The Intelligent Blind Spot Intervention (I-BSI) system activates to help return the vehicle back to the center of the driving lane.

NOTE:

- **When overtaking several vehicles in a row, the vehicles after the first vehicle may not be detected if they are traveling close together.**
- **The radar sensors may not detect slower moving vehicles if they are passed quickly.**

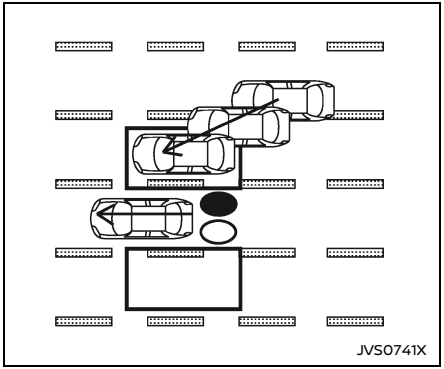

Illustration 7 - Entering from the side

Entering from the side

Illustration 7: The side indicator light illuminates if a vehicle enters the detection zone from either side.

NOTE:
The radar sensors may not detect a vehicle which is traveling at about the same speed as your vehicle when it enters the detection zone.

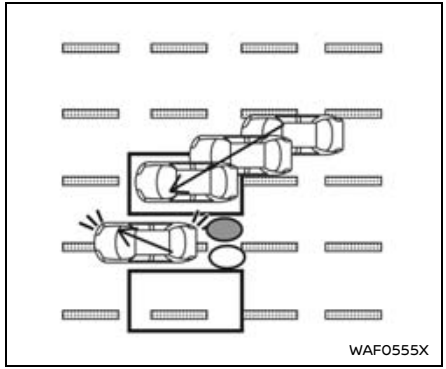

Illustration 8 - Entering from the side

Illustration 8: If the driver activates the turn signal while another vehicle is in the detection zone, then the side indicator light and I-BSI indicator flash and a chime will sound twice.

NOTE:

- **If the driver activates the turn signal before a vehicle enters the detection zone, the side indicator light and I-BSI indicator will flash but no chime will sound when another vehicle is detected.**

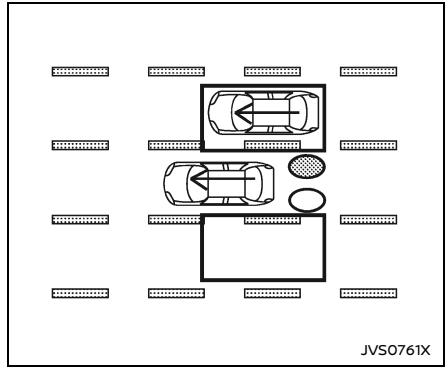

Illustration 9 - Entering from the side

Illustration 9: If the I-BSI system is on and your vehicle approaches the lane marker while another vehicle is in the detection zone, the system chimes (three times) and the side indicator light and I-BSI indicator flash. The I-BSI system activates to help return the vehicle back to the center of the driving lane.

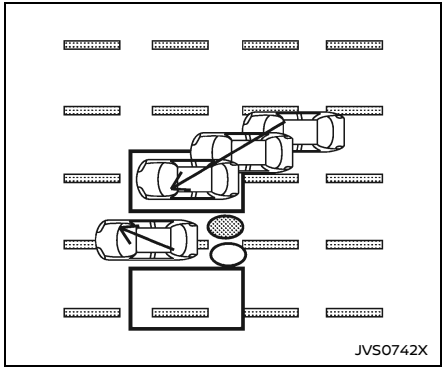

Illustration 10 - Entering from the side

Illustration 10: The I-BSI system will not operate if your vehicle is on a lane marker when another vehicle enters the detection zone. In this case only the BSW system operates.

NOTE:

- **The radar sensors may not detect a vehicle which is traveling at about the same speed as your vehicle when it enters the detection zone.**
- **Intelligent Blind Spot Intervention (I-BSI) will not operate or will stop operating and only a warning chime will sound under the following conditions.**
  - **When the brake pedal is depressed.**
  - **When the vehicle is accelerated during I-BSI system operation**
  - **When steering quickly**
  - **When the ICC, I-FCW or AEB warnings sound.**
  - **When the hazard warning flashers are operated.**
  - **When driving on a curve at a high speed.**
  - **When the BSW system is turned off.**

SYSTEM TEMPORARILY UNAVAILABLE

When any of the following messages appear on the vehicle information display, a chime will sound and the I-BSI system will be turned off automatically.

- "Currently unavailable":

  When the VDC system is turned off.
- "Unavailable Camera Temperature High":

  If the vehicle is parked in direct sunlight under high temperature conditions (over approximately 104°F (40°C)).
- "Unavailable Side Radar Obstruction":

  When side radar blockage is detected.

After the above conditions have finished, the assist function of the I-BSI system will resume.

See "Driver assistance troubleshooting guide" (P.362).

SYSTEM MALFUNCTION

When the I-BSI system malfunctions, it will be turned off automatically, the I-BSI indicator illuminates and a chime will sound, and the "Malfunction See Owner's Manual" warning message will appear in the vehicle information display.

Action to take:

Stop the vehicle in a safe location and push the P (Park) button to engage the P (Park) position. Turn the EV system off and restart the EV system. If the warning message continues to appear, It is recommended you visit a NISSAN certified LEAF dealer for this service.

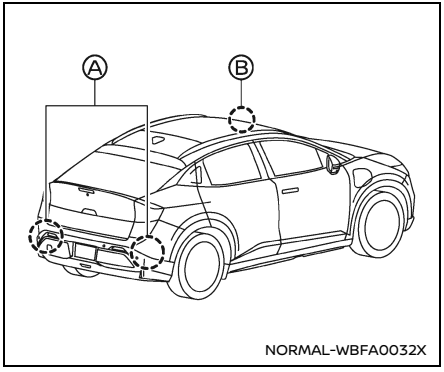

SYSTEM MAINTENANCE

Basic information

The two radar sensors Ⓐ for the I-BSI system are located near the rear bumper. Always keep the area near the radar sensors clean.

The radar sensors may be blocked by temporary ambient conditions such as snow, splashing water, mist or fog.

The blocked condition may also be caused by objects such as ice, frost or dirt obstructing the radar sensors.

Check for and remove objects obstructing the area around the radar sensors.

Do not attach stickers (including transparent material), install accessories or apply additional paint near the radar sensors.

Do not strike or damage the area around the radar sensors.

It is recommended you visit a NISSAN certified LEAF dealer if the area around the radar sensors is damaged due to a collision.

The lane camera unit Ⓑ for I-BSI system is located above the inside mirror. To keep the proper operation of I-BSI and prevent a system malfunction, be sure to observe the following:

- Always keep the windshield clean.
- Do not attach a sticker (including transparent material) or install an accessory near the camera unit.
- Do not place reflective materials, such as white paper or a mirror, on the instrument panel. The reflection of sunlight may adversely affect the camera unit's capability of detecting the lane markers.
- Do not strike or damage the areas around the camera unit. Do not touch the camera lens or remove the screw located on the camera unit. It is recommended you contact a NISSAN certified LEAF dealer if the camera unit is damaged due to an accident.

Precautions on repairing the bumper

When repairing the bumper, take caution because the radar sensors are installed on the bumper.

The radar sensor detects objects by emitting a radar signal and then measuring its reflection.

⚠ WARNING

If an improper repair is performed on the bumper (for example, application of putty made from different materials, repaint, etc.) the radar signal could be weakened or prevented from functioning properly. This may cause the radar sensor not to detect objects correctly. Improper repair may result in serious personal injury. If it is necessary to repair the bumper, it is recommended you visit a NISSAN certified LEAF dealer for this service.

Radio frequency statement

NOTE:
FCC Notice:
For USA:
This device complies with Part 15 of the FCC Rules. Operation is subject to the following two conditions: (1) this device may not cause harmful interference, and (2) this device must accept any interference received, including interference that may cause undesired operation.
CAUTION TO USERS:
Changes or modifications not expressly approved by the party responsible for compliance could void the user's authority to operate the equipment.
For Canada:
This device contains licence-exempt transmitter(s)/receiver(s) that comply with Innovation, Science and Economic Development Canada's licence-exempt RSS(s). Operation is subject to the following two conditions: (1) This device may not cause interference. (2) This device must accept any interference, including interference that may cause undesired operation of the device.
L'émetteur/récepteur exempt de licence contenu dans le présent appareil est conforme aux CNR d'Innovation, Sciences et Développement économique Canada applicables aux appareils radio exempts de licence. L'exploitation est autorisée aux deux conditions suivantes:
1) L'appareil ne doit pas produire de brouillage;
2) L'appareil doit accepter tout brouillage radioélectrique subi, même si le brouillage est susceptible d'en compromettre le fonctionnement.

REAR CROSS TRAFFIC ALERT (RCTA)

BASIC INFORMATION

WARNING

Failure to follow the warnings and instructions for proper use of the RCTA system could result in serious injury or death.

- **The RCTA system is not a replacement for proper driving procedures and is not designed to prevent contact with vehicles or objects. When backing out of a parking space, always use the side and rear mirrors and turn and look in the direction your vehicle will move. Never rely solely on the RCTA system.**

The RCTA system will assist you when backing out from a parking space. When the vehicle is in reverse, the system is designed to detect other vehicles approaching from the right or left of the vehicle. If the system detects cross traffic, it will alert you.

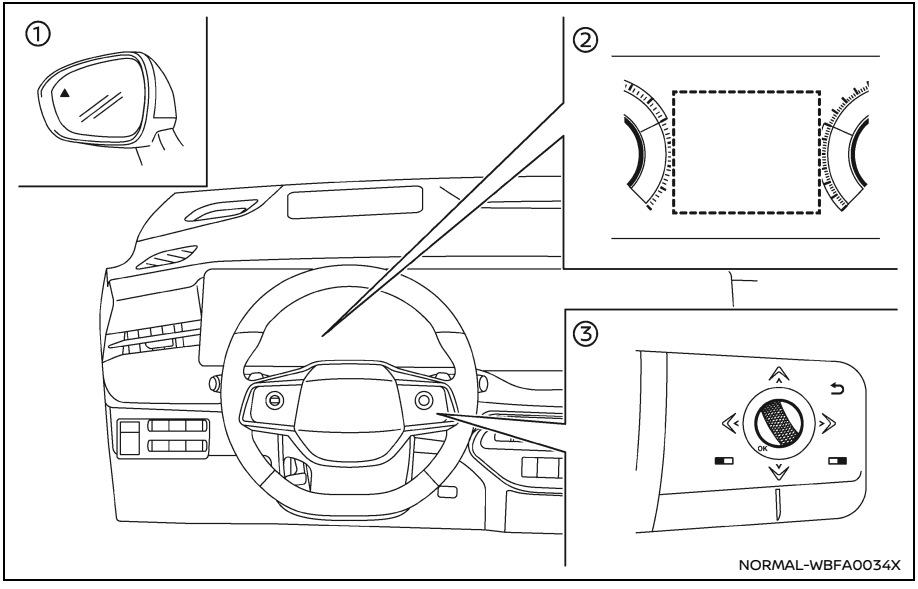

① Side indicator light
② Vehicle information display
③ Steering-wheel-mounted controls (right side)

RCTA SYSTEM OPERATION

The RCTA system can help alert the driver of an approaching vehicle when the driver is backing out of a parking space.

When the shift position is in R (Reverse) and the vehicle speed is less than approximately 5 MPH (8 km/h), the RCTA system is operational.

If the radar detects an approaching vehicle from either side, the system chimes (once) and the side indicator light flashes on the side the vehicle is approaching from.

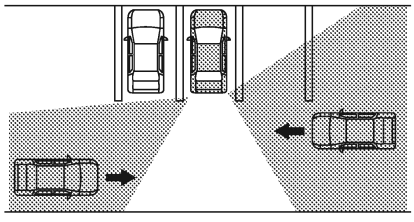

JVS0173X

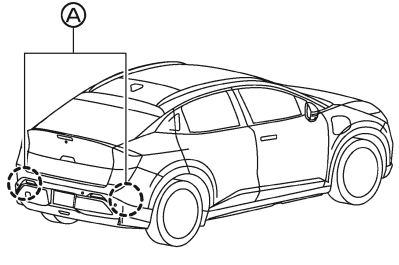

NORMAL-WBFA0022X

The RCTA system uses radar sensors Ⓐ installed on both sides near the rear bumper to detect an approaching vehicle.

The radar sensors can detect an approaching vehicle from up to approximately 66 ft (20 m) away.

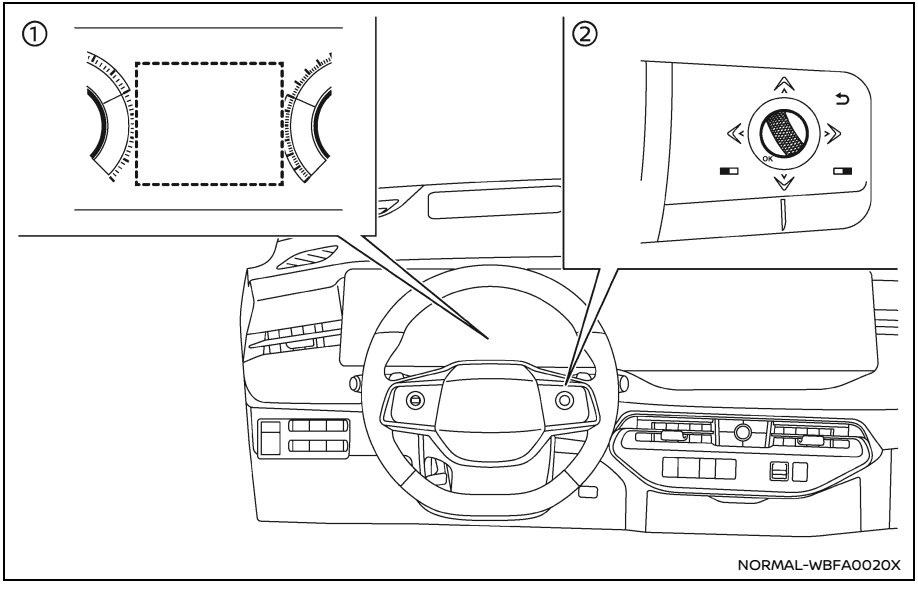

① Vehicle information display

② Steering-wheel-mounted controls (right side)

HOW TO ENABLE/DISABLE THE RCTA SYSTEM

Perform the following steps to enable or disable the RCTA system.

1. Push the ◀ ▶ button until “Settings” appears in the vehicle information display and then push the scroll dial. Use the scroll dial to select “Driver Assistance”. Then push the scroll dial.
2. Select “Parking Assist” and push the scroll dial.
3. Select “Rear Cross Traffic Alert” and push the scroll dial to turn the system on or off.

NOTE:
The system setting will be retained even if the EV system is restarted.

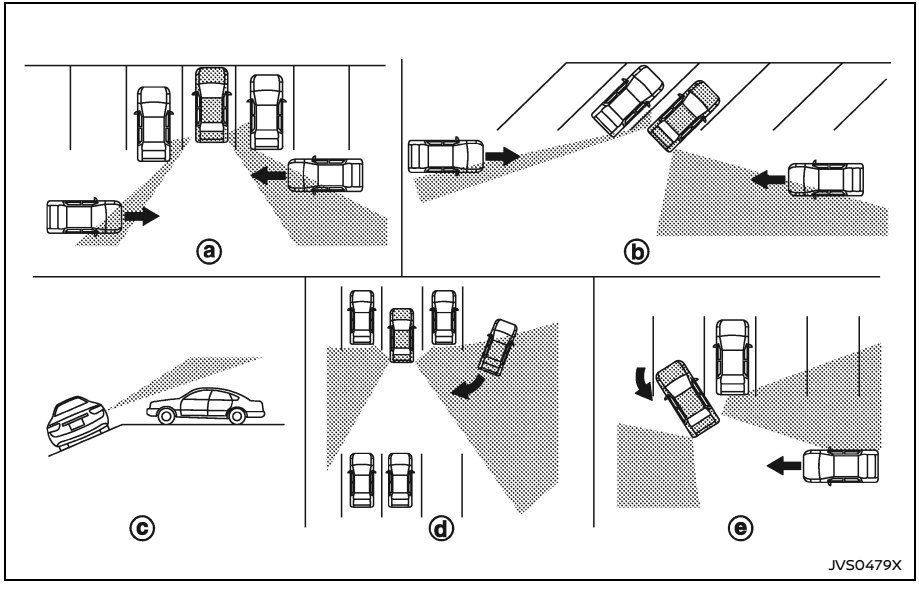

RCTA SYSTEM LIMITATIONS

WARNING

Listed below are the system limitations for the RCTA system. Failure to operate the vehicle in accordance with these system limitations could result in serious injury or death.

- **Always check surroundings and turn to check what is behind you before backing up. The radar sensors detect approaching (moving) vehicles. The radar sensors cannot detect every object such as:**
  - **Pedestrians, bicycles, motorcycles, animals or child-operated toy vehicles**
  - **A vehicle that is passing at speeds greater than approximately 19 MPH (30 km/h)**
  - **A vehicle that is passing at speeds lower than approximately 5 MPH (8 km/h)**
- **The radar sensors may not detect approaching vehicles in certain situations:**
  - **Illustration ⓐ: When a vehicle parked next to you obstructs the beam of the radar sensor.**

- **Illustration ⓑ: When the vehicle is parked in an angled parking space.**
- **Illustration ⓒ: When the vehicle is parked on inclined ground.**
- **Illustration ⓓ: When an approaching vehicle turns into your vehicle's parking lot aisle.**
- **Illustration ⓔ: When the angle formed by your vehicle and approaching vehicle is small**

- **The following conditions may reduce the ability of the radar to detect other vehicles:**
  - **Severe weather**
  - **Road spray**
  - **Ice/frost/dirt build-up on the vehicle**
- **Do not attach stickers (including transparent material), install accessories or apply additional paint near the radar sensors. These conditions may reduce the ability of the radar to detect other vehicles**
- **Excessive noise (e.g. audio system volume, open vehicle window) will interfere with the chime sound, and it may not be heard.**

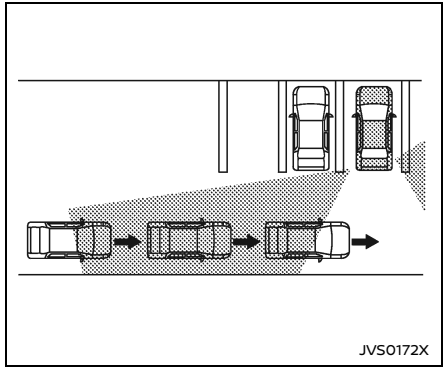

Illustration 1

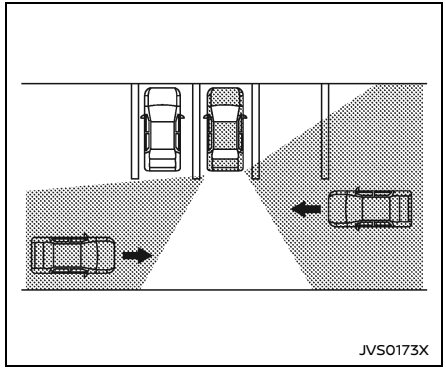

Illustration 2

NOTE:
In the case of several vehicles approaching in a row (Illustration 1) or in the opposite direction (Illustration 2), a chime may not be sounded by the RCTA system after the first vehicle passes the sensors.

SYSTEM TEMPORARILY UNAVAILABLE

When radar blockage is detected, the system will be deactivated automatically. The "Unavailable Side Radar Obstruction" warning message will appear in the vehicle information display.

The systems are not available until the conditions no longer exist.

The radar sensors may be blocked by temporary ambient conditions such as snow, splashing water, mist or fog.

The blocked condition may also be caused by objects such as ice, frost or dirt obstructing the radar sensors.

NOTE:
If the BSW system stops working, the RCTA and Intelligent Blind Spot Intervention (I-BSI) systems will also stop working.

Action to take:

When the above conditions no longer exist, the system will resume automati-

cally.

See "Driver assistance troubleshooting guide" (P.362).

SYSTEM MALFUNCTION

When the RCTA system malfunctions, it will turn off automatically. The "Malfunction See Owner's Manual" warning message will appear in the vehicle information display.

NOTE:
If the BSW system stops working, the RCTA and I-BSI system will also stop working.

Action to take:

Stop the vehicle in a safe location, turn the EV system off and restart the EV system. If the message continues to appear, have the system checked. It is recommended that you visit a NISSAN certified LEAF dealer for this service.

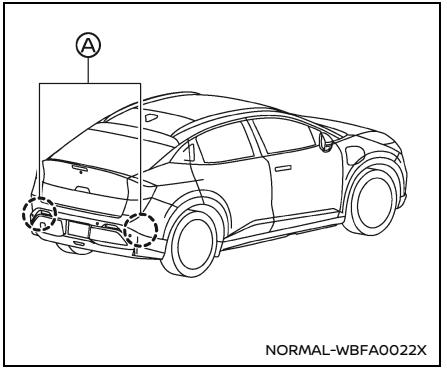

SYSTEM MAINTENANCE

Basic information

The two radar sensors Ⓐ for the RCTA system are located near the rear bumper. Always keep the area near the radar sensors clean.

The radar sensors may be blocked by temporary ambient conditions such as snow, splashing water, mist or fog.

The blocked condition may also be caused by objects such as ice, frost or dirt obstructing the radar sensors.

Check for and remove objects obstructing the area around the radar sensors.

Do not attach stickers (including transparent material), install accessories or apply additional paint near the radar sensors.

Do not strike or damage the area around the radar sensors. It is recommended that you visit a NISSAN certified LEAF dealer if the area around the radar sensors is damaged due to a collision.

Precautions on repairing the bumper

When repairing the bumper, take caution because the radar sensors are installed on the bumper.

The radar sensor detects objects by emitting a radar signal and then measuring its reflection.

WARNING

If an improper repair is performed on the bumper (for example, application of putty made from different materials, repaint, etc.) the radar signal could be weakened or prevented from functioning properly. This may cause the radar sensor not to detect objects correctly. Improper repair may result in serious personal injury. If it is necessary to repair the bumper, it is recommended you visit a NISSAN certified LEAF dealer for this service.

Radio frequency statement

NOTE:

FCC Notice:

For USA:

This device complies with Part 15 of the FCC Rules. Operation is subject to the following two conditions: (1) this device may not cause harmful interference, and (2) this device must accept any interference received, including interference that may cause undesired operation.

CAUTION TO USERS:

Changes or modifications not expressly approved by the party responsible for compliance could void the user's authority to operate the equipment.

For Canada:

This device contains licence-exempt transmitter(s)/receiver(s) that comply with Innovation, Science and Economic Development Canada's licence-exempt RSS(s). Operation is subject to the following two conditions: (1) This device may not cause interference. (2) This device must accept any interference, including interference that may cause undesired operation of the device.

L'émetteur/récepteur exempt de licence contenu dans le présent appareil est conforme aux CNR d'Innovation, Sciences et Développement économique Canada applicables aux appareils radio exempts de licence. L'exploitation est autorisée aux deux conditions suivantes:

1) L'appareil ne doit pas produire de brouillage;

2) L'appareil doit accepter tout brouillage radioélectrique subi, même si le brouillage est susceptible d'en compromettre le fonctionnement.

OVERVIEW

ProPILOT Assist is a hands on driver assistance system intended for limited access expressways and not designed to be used on city/rural streets. The system is intended to help keep the vehicle in the center of the lane and maintain a preset distance to the vehicle ahead traveling in the same lane.

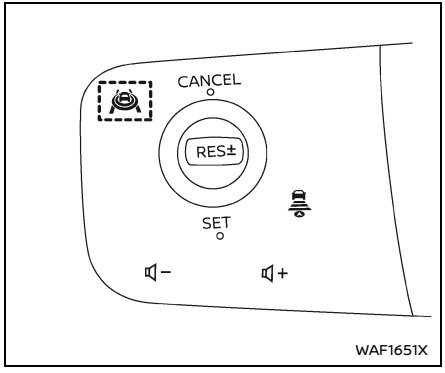

WARNING

Applicable to ProPILOT Assist suite of systems, including ProPILOT Assist, Intelligent Cruise Control (ICC), Steering Assist and conventional (fixed speed) cruise control, referenced below as "ProPILOT Assist systems" (All systems if so equipped).

- **Failure to follow the following warnings and instructions for proper use of the ProPILOT Assist systems, as applicable, could result in an accident causing serious injury or death.**
- **Always drive carefully and attentively when using the ProPILOT Assist systems. Read and understand the Owner's Manual thoroughly before using the ProPILOT Assist systems. To avoid serious injury or death, do not rely on the systems to prevent accidents or to control the vehicle's speed in emergency situations.**
- **Do not use the ProPILOT Assist systems except in appropriate road and traffic conditions.**
- **The ProPILOT Assist systems are for limited access freeway use only and are not intended for city driving.**
- **The ProPILOT Assist systems are not self-driving systems. Within the limits of their capabilities, as described in this manual, they help the driver with certain driving activities.**
- **The ProPILOT Assist systems are not replacements for proper driving procedures and will not correct careless, inattentive or absent-minded driving. Regardless of which system or function is being used, it is the driver's responsibility to stay alert, drive safely, and be in control of the vehicle at all times. Failure to apply the brakes or steer the vehicle when necessary may result in a serious accident.**
- **The ProPILOT Assist systems are only aids to assist the driver and are not collision warning or avoidance devices.**
- **There are limitations to the ProPILOT Assist systems' capabilities. Never rely solely on these systems. The ProPILOT Assist systems do not function in all driving, traffic, weather and road conditions.**
- **Never unfasten your safety seat belt when using the ProPILOT Assist. Doing so automatically cancels the ProPILOT Assist systems.**

- When using the ProPILOT Assist systems, always observe posted speed limits and do not set the speed over them.
- When the accelerator pedal is depressed, the ProPILOT Assist systems will not provide automatic braking and/or the approach warning. The driver must manually control the vehicle speed to maintain a safe distance to the vehicle ahead. Failure to do so could result in severe personal injury or death.
- Do not rely on the ProPILOT Assist systems to prevent accidents. The driver must maintain a safe distance to the vehicle ahead by braking or accelerating, depending on the surrounding circumstances.
- When using Steering Assist, it is the driver's responsibility to stay alert, drive safely, keep the vehicle in the traveling lane and be in control of the vehicle at all times. Never take your hands off the steering wheel while driving. Keep your hands on the steering wheel and drive the vehicle safely.
- Steering Assist is intended for use on limited access freeways with gentle (moderate) curves. To avoid risk of an accident, do not use this system on local or non-highway/freeway roads.
- Steering Assist only steers the vehicle to maintain its position in the center of a lane. The vehicle will not steer to avoid objects in the road in front of the vehicle, to avoid a vehicle moving into your lane or to avoid a vehicle approaching from the side.
- When using conventional (fixed speed) cruise control mode, a warning chime does not sound to warn you if you are too close to the vehicle ahead, as neither the presence of the vehicle ahead nor the vehicle-to-vehicle distance is detected. Pay special attention to the distance between your vehicle and the vehicle ahead of you, or a collision could occur.
- Always confirm the setting in the ICC system display.
- Do not use the conventional (fixed speed) cruise control mode when driving under the following conditions (doing so could cause a loss of vehicle control and result in an accident):
  - When it is not possible to keep the vehicle at a set speed
  - In heavy traffic or in traffic that varies in speed
  - On winding or hilly roads
  - On slippery roads (rain, snow, ice, etc.)
  - In very windy areas

PROPILOT ASSIST SYSTEMS OVERVIEW

Basic information

Each ProPILOT Assist feature is designed to help the driver in different ways as they drive.
Here is a summary of these features. See the specified page for detailed information.

Feature Name	Feature Description
Conventional (fixed speed) Cruise Control	Allows the driver to drive the vehicle at a fixed speed without keeping their foot on the accelerator pedal.
Intelligent Cruise Control (ICC)	• Helps the driver maintain a selected distance from the vehicle ahead and can reduce the speed to match a slower vehicle ahead. • Decelerates the vehicle to a standstill when a vehicle ahead slows to a stop.
Steering Assist	Assists the driver to help keep the vehicle within the center of the traveling lane.

How it works:

ProPILOT Assist Systems uses some or all of the following components:

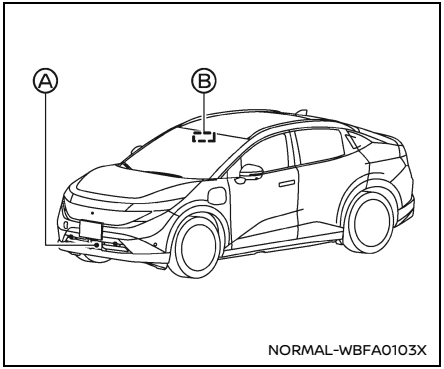

Ⓐ **Front radar sensor:**

Monitors the vehicle ahead in the same and adjacent lanes.

Ⓑ **Multi-sensing front camera:**

Monitors the other vehicles and lane markings.

NOTE:

It is important to ensure the radar sensors, cameras and sonar sensors are clear before each drive. Unclean or damaged cameras and sensors, as well as environmental conditions, can affect system performance. See "Driver assistance troubleshooting guide" (P.362) for more information.

Always keep the area near the radar sensors clean.

The radar sensors may be blocked by temporary ambient conditions such as snow, splashing water, mist or fog.

The blocked condition may also be caused by objects such as ice, frost or dirt obstructing the radar sensors.

Check for and remove objects obstructing the area around the radar sensors.

Do not attach stickers (including transparent material), install accessories or apply additional paint near the radar sensors.

Do not strike or damage the area around the radar sensors.

See a NISSAN certified LEAF dealer or other authorized repair shop if the area around the radar sensors is damaged due to a collision.

Precautions on repairing the bumper

When repairing the bumper, take caution because the radar sensors are installed on the bumper.

The radar sensor detects objects by emitting a radar signal and then measuring its reflection.

WARNING

If an improper repair is performed on the bumper (for example, application of putty made from different materials, repaint, etc.) the radar signal could be weakened or prevented from functioning properly. This may cause the radar sensor not to detect objects correctly. Improper repair may result in serious personal injury. If it is necessary to repair the bumper, it is recommended you visit a NISSAN certified LEAF dealer for this service.

Limitations

Many factors can impact the performance of ProPILOT Assist systems, causing the systems not to perform as intended. ProPILOT Assist functions should not be used in certain situations. These include (but are not limited to):

- Poor visibility due to heavy rain, snow, ice, fog, etc.
- Bright light (due to oncoming traffic, direct sunlight, etc.)
- Obstruction to radars, sensors and cameras caused by mud, dirt, ice, snow, etc.
- Interference to sensors and radars (such as a bike rack, decals, etc.)
- Faded or inconsistent lane markings
- Construction zones
- Barren landscape
- Wide or narrow lanes
- Hard deceleration
- Tollbooths

ProPILOT Assist may not react to:

- Stationary vehicles
- Pedestrians, bicycles or animals
- Road debris
- Road pylon in a construction zone

See "Overview" (P.409) for additional system limitations.

WARNING

Listed below are the system limitations for the ProPILOT Assist functions and systems, including Intelligent Cruise Control (ICC) and Steering Assist. Failure to operate the vehicle in accordance with these system limitations could result in serious injury or death:

- **These systems are primarily intended for use on freeways. It is not advisable to use these systems in city/urban traffic.**
- **These systems will not adapt automatically to all road conditions. They should be used in evenly flowing traffic. Do not use these systems on roads with sharp curves or in inclement weather or adverse road conditions.**
- **There are performance limits to all ProPILOT Assist functions. Never rely solely on these systems. These systems do not correct careless, inattentive, or absent-minded driving or overcome poor visibility in inclement weather.**
- **When using these systems, the driver must be attentive to the driving task. When necessary, decelerate the vehicle speed by using the brake pedal, accelerate using the accelerator pedal, and steer the vehicle as appropriate in order to maintain a safe distance between vehicles and manage changing or dynamic traffic, vehicle and roadway conditions.**

- **When the ProPILOT Assist function automatically brings the vehicle to a stop, your vehicle can automatically accelerate if the vehicle is stopped for less than approximately 3 seconds. Always be prepared to apply the brakes and stop your vehicle if necessary.**
- **Always check your surroundings before restarting the vehicle when it has been at a stop.**
- **These systems are not designed to detect anything other than motorized vehicles travelling in the same direction on the roadway. In particular, the systems do not detect the following objects:**
  - **Pedestrians, animals or objects in the roadway**
  - **Oncoming vehicles in the same lane**
  - **Motorcycles travelling offset in the travel lane**
  - **Road debris**

- **In the following situations, the ProPILOT Assist functions and system may not operate properly. To avoid accidents or unwanted system operation, never use these systems under the following conditions:**
  - **On roads with heavy, high-speed traffic or sharp curves**
  - **On slippery or adverse road surfaces, such as on wet, icy or snowy roads, or when roadway traffic is causing adverse travel conditions (i.e. road spray from passing vehicles)**
  - **On unpaved or uneven roadway surfaces, or on steep uphill or downhill roads**
  - **During inclement weather, such as rain, snow, fog, ice, sandstorms or dust storms**
  - **When sensor detection capabilities are reduced, for example:**
    - **When snow/ice/dirt are covering the sensors or the camera area of the windshield is fogged up**
    - **When objects, such as stickers, bike racks or cargo obstruct the vehicle sensors**
    - **When strong light (for example, sunlight or high beams from oncoming vehicles) enters the cameras or there is a sudden change in brightness (for example, entering or exiting a tunnel or driving under a bridge)**
  - **When traffic conditions make it difficult to keep a proper distance between vehicles because of frequent acceleration or deceleration, or when the approach warning activates frequently**
  - **When a complicated-shaped vehicle, such as a car carrier trailer or flatbed truck/trailer is near the vehicle ahead**
  - **When there is interference by other radar sources**

- When driving with vehicle equipment that is not original to the vehicle (for example, equipped with non-original brake, tire or suspension parts) or not within normal conditions (for example, tire wear, abnormal tire pressure, installation of tire chains, reduced headlight brightness)
- When excessively heavy baggage is loaded in the rear seat or cargo area of the vehicle, or when vehicle load capacity is exceeded.
- When driving on roads with missing, unclear, discontinued or less detectable lane markers or roads with multiple parallel lane markers, or roads with markings or features that might be detected as lane markers (for example, wheel ruts and paving seams)
- When driving on roads where the lane markers or traffic patterns are changing, temporary or unusual (for example, merging or separating lanes, widering/narrowing lanes, exit ramps, toll gates, construction zones, lane closures)
- When the lane markers are not visible due to darkness and the headlights are off

- There are variety of conditions and situations in which the detection of a vehicle ahead may be delayed or the vehicle ahead may not be detected. A few examples include:
  - A vehicle suddenly cuts in front of your vehicle
  - When driving on a blind curve or winding road
  - A stationary vehicle or vehicle travelling at a much slower speed suddenly becomes apparent after the vehicle ahead changes lanes
  - When motorcycles are traveling offset from the center of the lane
- Drivers should always be attentive and take action if needed to manage the roadway and traffic situation.
- In some conditions, a vehicle or object can unexpectedly come into the sensor detection zone and cause automatic braking. Always stay alert and avoid using the systems where not recommended.
- Excessive noise will interfere with the warning chime sound and the beep may not be heard.

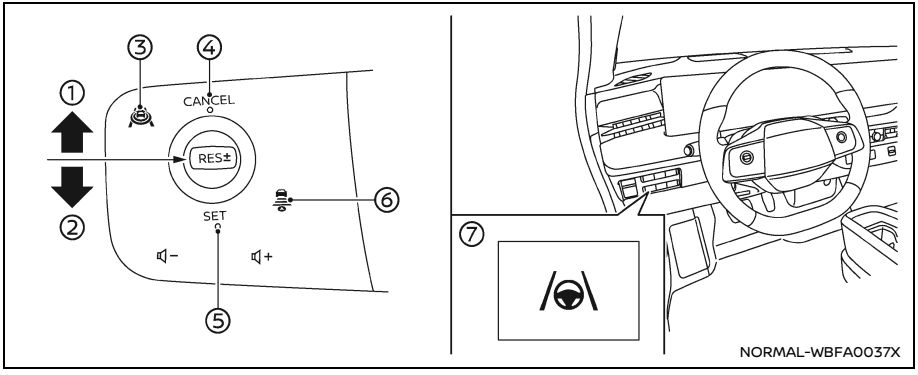

Example

How to operate ProPILOT Assist

NOTE:
All available systems and features are activated simultaneously when ProPILOT Assist is activated.

① RES± switch (RES+ operation):
Resumes vehicle speed or increases cruise speed incrementally

② RES± switch (RES- operation):
Resumes vehicle speed or decreases cruise speed incrementally

③ ProPILOT Assist switch:
Turns the ProPILOT Assist on or off

④ CANCEL switch:
Deactivates the ProPILOT Assist

⑤ SET switch:
Sets desired cruise speed

⑥ Distance switch:
Adjust distance to lead vehicle

⑦ Steering Assist switch:
Turns the Steering Assist function on or off

Turning on ProPILOT Assist (2–step operation):

1. Push the ProPILOT Assist switch ③.
   - The ProPILOT Assist display appears.

NOTE:
For conventional (fixed speed) cruise control mode, push and hold the ProPILOT Assist switch for more than 1.5 seconds. No other ProPILOT Assist features are available in the conventional (fixed speed) cruise control mode.

2. Once the vehicle is at the desired speed, push the SET switch ⑤.
   - Vehicle will maintain the set speed unless the vehicle detects a slower vehicle in the traveling lane.
   - Once engaged, ProPILOT Assist displays and indicators will appear. (See "ProPILOT Assist displays and indicators" (P.419).)

NOTE:
If ProPILOT Assist is in standby (step 1), the vehicle will not brake.

How to adjust distance setting:

Cycle through the desired distance using the distance switch ⑥.

- Distance will vary based on the vehicle speed as this setting is time dependent, not based on gap distance. Example distance is below.

Setting	Distance at 60 MPH (100 km/h)
1 bar	90 ft (30 m)
2 bar	150 ft (45 m)
3 bar	200 ft (60 m)

How to change the vehicle set speed:

To increase speed:

- Push up and hold the RES± switch ① to increase speed in 5 MPH (5 km/h) increments.
- Push up and quickly release the RES± switch ① to increase speed by 1 MPH (1 km/h).
- Accelerate to new desired speed and push the SET switch ⑤.

To decrease speed:

- Push down and hold the RES± switch ② to decrease speed in 5 MPH (5 km/h) increments.
- Push down and quickly release the RES± switch ② to decrease speed by 1 MPH (1 km/h).

How to momentarily accelerate or decelerate:

- Depress the accelerator pedal when acceleration is required. Release the accelerator pedal to resume to previously set vehicle speed. Vehicle set speed will blink to indicate the vehicle is traveling faster than the set speed.
- Depressing the brake pedal when deceleration is required. Doing so will put the system in standby. Push up the cancel switch to the RES± switch to either direction ①② to resume to previous set speed.

WARNING

When the accelerator pedal is depressed, the ICC system will not provide automatic braking and approach warning. The driver must manually control the vehicle speed to maintain a safe distance to the vehicle ahead. Failure to do so could result in severe personal injury or death.

How to enable/disable Steering Assist:

Use the following methods to enable or disable Steering Assist:

- Steering Assist switch ⑦
- Vehicle information display

  Settings → Driver Assistance → Lane Centering Assist → Steering Assist → ON/OFF

NOTE:
Steering Assist setting will remain even after the EV system is restarted.

How to cancel ProPILOT Assist:

To cancel the ProPILOT Assist, use either of the following methods:

- Push the CANCEL switch ④. This will put the system in standby.
- Tap the brake pedal. This action will keep the system in standby. To resume, push the RES± switch to either direction ①② to return to the original vehicle set speed, or push the SET switch ⑤ to set the current vehicle speed.
- Push the ProPILOT Assist switch ③. This will turn off the system and the ProPILOT Assist status indicator will turn off.

NOTE:
When the ProPILOT Assist is canceled while the vehicle is stopped, the system will automatically apply the parking brake.

⚠ WARNING

To prevent the vehicle from moving or rolling unexpectedly, which could result in serious personal injury or property damage, before exiting the vehicle, make sure to push the ProPILOT Assist switch ③ to turn the system off. Push the P (Park) button to shift to the P (Park) position, and turn the EV system off.

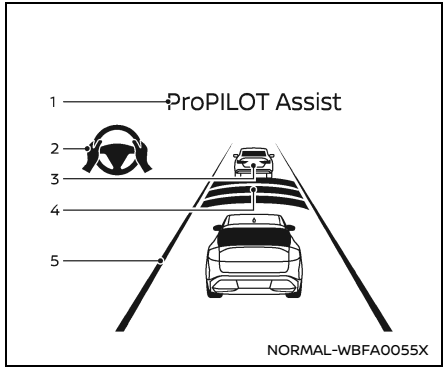

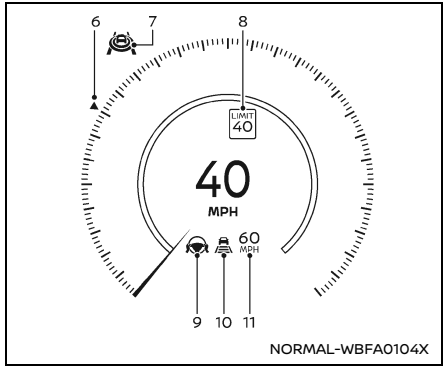

PROPILOT ASSIST DISPLAYS AND INDICATORS

1. **ProPILOT activation**

   Displays once the ProPILOT Assist system is activated

2. **Steering Assist indicator**

   Indicates the status of the Steering Assist function by the color of the indicator

   - Steering Assist indicator (gray): Steering Assist standby
   - Steering Assist indicator (green): Steering Assist active

3. **Vehicle ahead detection indicator**

   Displays whether the system detects a vehicle in front of you (only when ICC is active)

4. **Set distance indicator**

   Displays the selected distance

5. **Lane marker indicator**

   Indicates whether the system detects lane markers

   - No lane markers displayed: Steering Assist is turned off
   - Lane marker indicator (gray): No lane markers detected
   - Lane marker indicator (green): Lane markers detected, Steering Assist is active

- Lane marker indicator (yellow): Lane departure is detected

6. **Target speed indicator**

   Indicates the target vehicle speed

7. **ProPILOT status indicator ( )**

   Indicates the status of the ProPILOT Assist system by the color of the indicator

   - ProPILOT Assist status indicator (white): ProPILOT Assist is on but in standby
   - ProPILOT Assist status indicator (blue): ProPILOT Assist active

8. **Detected road sign (speed limit) indicator (if so equipped) ( )**

   Indicates the currently detected speed limit

9. **Steering Assist status indicator/warning (,)**

   Displays the status of the Steering Assist by the color of the indicator/warning

   - No Steering Assist status indicator displayed: Steering Assist is turned off
   - Steering Assist status indicator (gray): Steering Assist standby
   - Steering Assist status indicator (green): Steering Assist active
   - Steering Assist status indicator (yellow): Steering Assist malfunction
   - Steering Assist status indicator (red): Hands off detected

10. **Speed control status indicator/set distance indicator/lane marker indicator ( )**

    Displays the status of speed control by the color of the indicator, and displays the selected distance by the number of horizontal bars shown

    - Speed control status indicator (white): ICC standby
    - Speed control status indicator (green): ICC (distance control mode) is active
    - Green vehicle icon displayed: Vehicle detected ahead
    - No vehicle icon shown: No vehicle detected ahead (Your vehicle maintains the driver-selected set speed.)
    - Speed control status indicator (yellow): Indicates an ICC malfunction

    Displays the status of the Steering Assist by the color of the lane marker indicator.

    - Lane marker indicator (no lane): Steering Assist is turned off
    - Lane marker indicator (gray): Steering Assist standby
    - Lane marker indicator (green): Steering Assist active

11. **Vehicle set speed indicator**

    Indicates the vehicle set speed

    - Green: ICC active
    - Gray: ICC standby

    The speed unit can be converted between "MPH" and "km/h". (See "Unit/Language" (P.178).)

INTELLIGENT CRUISE CONTROL (ICC)

Basic information

Intelligent Cruise Control (ICC) is a part of ProPILOT Assist. Read the entire ProPILOT Assist section before using this system, including how to operate the system and understanding the display. (See "ProPILOT Assist Systems" (P.409), "How to operate ProPILOT Assist" (P.417) and "ProPILOT Assist displays and indicators" (P.419).)

The ICC system uses a forward facing radar sensor and is designed to operate as follows:

- When there is no vehicle detected in the same traveling lane, the ICC system maintains the speed set by the driver.
- When there is a vehicle detected in the traveling lane, the ICC system adjusts

the speed to maintain the distance, selected by the driver, from the vehicle ahead. If the vehicle ahead comes to a stop, the vehicle decelerates to a standstill. Once your vehicle stops, the ICC system keeps the vehicle stopped.

- When the vehicle traveling ahead moves to a different traveling lane, the ICC system accelerates and maintains vehicle speed up to the set speed. Maximum speed: 90 MPH (144 km/h)

The ICC system can only apply up to 40% of the vehicle's total braking power and should only be used when traffic conditions allow vehicle speeds to remain fairly constant. If acceleration is required over the ICC system, the driver may override using the accelerator pedal at any time. The system will not brake the vehicle during driver acceleration. The ICC system requires a lead vehicle if the speed is below approximately 12 MPH (20 km/h). Vehicle must be traveling at 12 MPH (20 km/h) to initially set the ICC system.

NOTE:
Brake lights of the vehicle come on when braking is performed by the ICC system.

System operation

The ICC system can be set to one of two cruise control modes:

- Cruise control — fixed speed (P.424)
- Intelligent Cruise Control — adaptive

NOTE:
Steering Assist is not available in conventional (fixed speed) cruise control.

For Intelligent Cruise Control without Steering Assist, activate ProPILOT Assist and then turn off Steering Assist by the switch or in the settings menu. For additional information, see "How to operate ProPILOT Assist" (P.417) and "Steering Assist" (P.425).

For conventional (fixed speed) cruise control, push and hold the ProPILOT Assist switch for longer than approximately 1.5 seconds then set your desired speed. For additional information, see "Conventional (fixed speed) cruise control" (P.424).

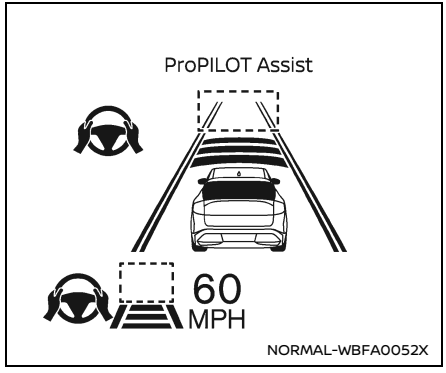

System set display — no vehicle detected ahead

If no vehicle ahead detected:

The ICC system maintains the vehicle set speed, similar to standard cruise control, as long as no vehicle is detected in the lane ahead.

When a vehicle is no longer detected ahead, the vehicle will gradually accelerate to driver set speed.

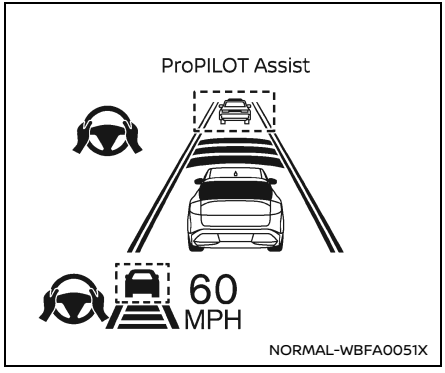

System set display — a vehicle detected ahead

If vehicle ahead is detected:

When a vehicle is detected in the lane ahead, the ICC system decelerates to the vehicle by controlling the throttle and applying the brakes to match the speed of the slower vehicle ahead and maintain the driver selected distance.

See "How to operate ProPILOT Assist" (P.417) for more information.

If the vehicle ahead stops:

When a vehicle ahead is detected and it gradually decelerates to a stop, your vehicle will decelerate to a standstill. When at a standstill, the "[RES] Resume Cruise" message is displayed on the vehicle information display.

- If the vehicle ahead stops and your vehicle is stopped less than approximately 3 seconds, the "Follow Vehicle Ahead" message appears on the vehicle information display. When the vehicle ahead begins to move, your vehicle will start moving automatically.

To resume the ICC system after stop, push the RES± switch to either direction or lightly depress the accelerator pedal.

WARNING

If a vehicle cuts in after your vehicle was stopped by the ICC system, it cannot be detected depending on its position or direction. Your vehicle may approach the cut-in vehicle when restarting. Operate the brake pedal to maintain a safe distance to the vehicle ahead.

Passing a slower vehicle:

When passing a slower vehicle on the left, the ICC system will temporarily accelerate to aid in the lane change. The system will not exceed set speed during a lane change.

Approach warning:

If your vehicle comes closer to the vehicle ahead due to rapid deceleration of that vehicle or if another vehicle cuts in, the system warns the driver with the chime and ICC system display. Decelerate by depressing the brake pedal to maintain a safe vehicle distance if:

- The chime sounds.
- The vehicle ahead detection indicator blinks.
- You judge it necessary to maintain a safe distance.

The warning chime may not sound in some cases when there is a short distance between vehicles. Some examples are:

- When the vehicles are traveling at the same speed and the distance between vehicles is not changing.
- When the vehicle ahead is traveling faster and the distance between vehicles is increasing.

NOTE:
The approach warning chime may sound and the system display may flash when the radar sensor detects objects on the side of the vehicle or on the side of the road. This may cause the ICC system to decelerate or accelerate the

vehicle The radar sensor may detect these objects when the vehicle is driven on winding, narrow, or hilly roads or when the vehicle is entering or exiting a curve. In these cases, you will have to manually control the proper distance ahead of you vehicle. Also, the sensor sensitivity can be affected by vehicle operation (steering maneuver or driving position in the lane) or traffic or vehicle conditions (for example, if a vehicle is being driven with some damage).

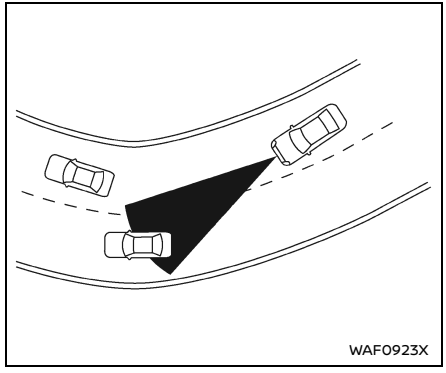

NOTE:
It is important to ensure the radar sensors, cameras and sonar sensors are clean before each drive. Unclean or damaged cameras and sensors, as well as environmental conditions can affect system performance. See "Driver assistance troubleshooting guide" (P.362) for more information.

Warnings and malfunctions

Under the following conditions, the ICC system is automatically canceled. A chime will sound and the system will not be able to be set:

- The vehicle ahead is not detected and your vehicle is traveling below the speed of 12 MPH (20 km/h).
- Any door is open.
- The driver's seat belt is unfastened.
- Your vehicle has been stopped by the ICC system for approximately 3 minutes or longer.
- The vehicle is shifted out of the D (Drive) or B (if so equipped) position.
- The electronic parking brake is applied.
- The VDC system is turned off.
- The VDC system (including the traction control system) operates.
- A wheel slips.
- The AEB with Pedestrian Detection applied harder braking.
- When the radar signal is temporarily interrupted.

If limitations are considered, all conditions above are met and the ICC system is still not functioning properly, see "Driver assistance troubleshooting guide" (P.362) for full list of messages and conditions.

CONVENTIONAL (fixed speed) CRUISE CONTROL

Basic information

Conventional (fixed speed) cruise control is available as an alternative to Intelligent Cruise Control. To turn on conventional cruise control mode:

1. Push and hold the ProPILOT Assist switch Ⓐ for longer than approximately 1.5 seconds.

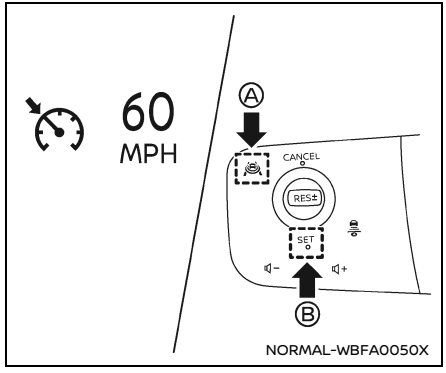

2. Once vehicle is at the desired speed, push the SET switch Ⓑ.

   Once set, the vehicle will maintain the desired set speed as shown by the cruise control icon and set speed indicator displayed above.

For complete detail on the operation of conventional (fixed speed) cruise control, see "How to operate ProPILOT Assist" (P.417).

NOTE:
No other ProPILOT Assist features are available in conventional (fixed speed) cruise control mode. To use the ICC system again, cancel the system (if necessary) and quickly push and release the ProPILOT Assist switch.

WARNING

To avoid accidentally engaging cruise control, make sure to turn the ProPILOT Assist switch off when not using the ICC system.

System temporarily unavailable

A chime sounds under the following conditions and the control is automatically canceled.

- When the transmission is out of the D (Drive)
- When the parking brake is applied
- When the VDC system (including the traction control system) operates
- When the VDC system is turned off
- When a wheel slips

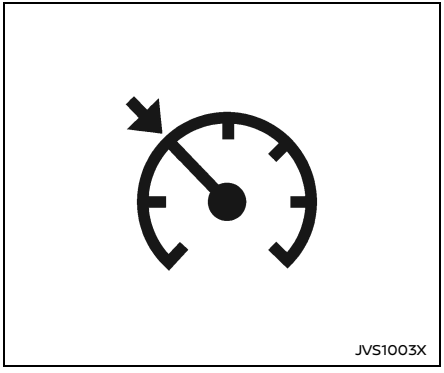

Warning

When the system is not operating properly, the chime sounds and the color of the cruise indicator will change to yellow.

Action to take:

If the color of the cruise indicator changes to yellow, park the vehicle in a safe place. Turn the EV system off, restart the EV system, resume driving and then perform the setting again.

If it is not possible to set or the indicator stays on, it may indicate that the system is malfunctioning. Although the vehicle is still driveable under normal conditions, have the system checked. It is recommended you visit a NISSAN certified LEAF dealer for this service.

STEERING ASSIST

Basic information

Steering Assist is a part of ProPILOT Assist Systems. Read the entire ProPILOT Assist section before using this system, including how to operate the system and understanding the display. (See "ProPILOT Assist Systems" (P.409), "How to operate ProPILOT Assist" (P.417) and "ProPILOT Assist displays and indicators" (P.419).)

Steering Assist uses a forward facing camera to detect clear and consistent lane markings on both sides of the vehicle and is designed to help keep the vehicle in the center of traveling lane. Steering Assist is only available when combined with the Intelligent Cruise Control (ICC) system making up ProPILOT Assist.

Steering Assist can be activated when the following conditions are met:

- ProPILOT Assist is activated.
- Lane markings on both sides are clearly detected.
- The driver has hands on the steering wheel.
- The vehicle is driven at the center of the lane.
- Turn signals are not active.
- The windshield wipers are not operated in the high speed position.

When a curve or strong cross wind exceeds the capabilities of the system and your vehicle approaches the lane line, the Intelligent Lane Intervention (I-LI) system will activate. The I-LI system will have a visual and vibration alert (or audible alert when the system detect hands-off) and will help assist the driver to return to the center of the lane. For more information, see "Intelligent Lane Intervention (I-LI)" (P.377).

How to enable/disable Steering Assist:

Use the following methods to enable or disable Steering Assist:

- Steering Assist switch (located on the left side of the instrument panel as shown in the diagram) (See "How to operate ProPILOT Assist" (P.417).)
- Vehicle information display

  Settings → Driver Assistance →Lane Centering Assist → Steering Assist → ON/OFF

NOTE:
Steering Assist setting will remain even after the EV system is restarted.

NOTE:
It is important to ensure the radar sensors, cameras and sonar sensors are

clean before each drive. Unclean or damaged cameras and sensors, as well as environmental conditions can affect system performance. See "Driver assistance troubleshooting guide" (P.362) for more information.

Hands on detection

When Steering Assist is activated, the vehicle monitors the driver's steering wheel operation using a capacitive and torque sensor in the steering wheel. When ProPILOT Assist displays in hands on (green) mode, if the steering wheel is not operated or if the driver takes their hands off the steering wheel for a period of time, the warning ① appears and the hands off warning light ② illuminates. See table on the next page for escalating warnings if the system does not detect drivers hands on the wheel.

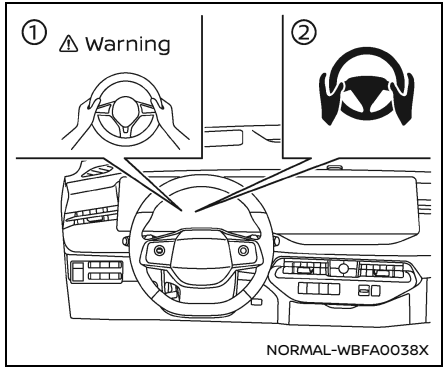

NOTE:
The system may not detect the driver's hand(s) on the steering wheel in the following conditions:

- **When the driver is wearing gloves.**
- **When a cover is put on the steering wheel.**
- **When the driver grips the seam of leather or spokes on the steering wheel.**
- **If hands are not detected by touch, it is recommended to provide steering torque.**

HANDS ON DETECTION

Basic information

In Hands On (green) mode, the vehicle uses capacitative and torque sensors in the steering wheel to detect whether the driver has their hands placed on the steering wheel. It is the driver's responsibility to have hands on the wheel in order to avoid these increasing alerts.

First Warning	• Message appears in the vehicle information display alerting driving that hands are not detected. • Driver must place their hands back on the steering wheel or apply light torque to the steering wheel to clear the message.
Second Warning	• Message begins to flash with escalating beeping sounds to draw driver's attention. • Driver must place their hands back on the steering wheel or apply light torque to the steering wheel to clear the message.
Third Warning	• The vehicle will apply 2 brake pulses to alert the driver of failure to comply. • Driver must place their hands back on the steering wheel or apply light torque to the steering wheel to clear the message.
Emergency Stop	• Emergency warning sound will play and a "Manually Steer" or "Take Steering Control" and/or "Slowing to Stop" warning message will display. • The vehicle will gradually slow vehicle to a complete stop in the traveling lane and the hazard indicator lights will automatically activate when the vehicle reaches approximately 40 MPH (65 km/h). • After the vehicle is brought to an emergency stop, the vehicle is connected to the Emergency Call (SOS) service operator, who then requests relief from public institutions (police, fire department, medical institutions). See "Emergency Call (SOS) button" (P.241)for more details of the emergency support. • After the emergency stop function is activated, the Steering Assist function will be disabled with the "Steering Assist OFF" message displayed until the power switch has been switched off and on again. • Driver must place their hands back on the steering wheel or apply light torque to the steering wheel to deactivate the emergency stop.

Steering Assist temporary standby

Automatic standby due to driving operation:

When the driver activates the turn signal, the Steering Assist is temporarily placed in a standby mode. (The Steering Assist restarts automatically when the operating conditions are met again.)

Automatic standby:

In the following cases, a double chime sounds and the Steering Assist is placed in a temporary standby mode. (The Steering Assist restarts automatically when the operating conditions are met again.)

- When the current traveling lane is too narrow to operate
- When a corner is too tight and the vehicle cannot stay in the traveling lane
- When lane markers on both sides are no longer detected
- When a vehicle ahead is no longer detected under approximately 37 MPH (60 km/h)
- When strong light enters the camera unit (For example, the light directly shines on the front of the vehicle at sunrise or sunset)
- When the temperature of the camera is too high

Steering Assist cancel

Under the following conditions, the Steering Assist cancels, the chime sounds twice, the warning message appears, and the Steering Assist status indicator and the Steering Assist indicator turn off:

- When unusual lane markers appear in the traveling lane or when the lane marker cannot be correctly detected for some time due to certain conditions (for example, a snow rut, the reflection of light on a rainy day, the presence of several unclear lane markers)
- When the windshield wiper operates in the high speed operation (the Steering Assist is disabled when the wiper operates for more than approximately 10 seconds)

Action to take:

When the conditions listed above are no longer present, turn Steering Assist on again using the Steering Assist switch.

Steering Assist malfunction

When the system malfunctions, it turns off automatically. The Steering Assist status warning (yellow) illuminates and the "Malfunction See Owner's Manual" warning message will appear in the vehicle information display. A chime may sound depending on the situation.

Action to take:

Stop the vehicle in a safe location, push the P (Park) button to shift to the P (Park) position, turn the EV system off, restart the EV system, resume driving, and set the ICC system again. If the warning (yellow) continues to illuminate, the Steering Assist is malfunctioning. Although the vehicle is still drivable under normal conditions, have the system checked. It is recommended that you visit a NISSAN certified LEAF dealer for this service.

AUTOMATIC EMERGENCY BRAKING (AEB) WITH PEDESTRIAN DETECTION SYSTEM

BASIC INFORMATION

⚠ WARNING

Failure to follow the warnings and instructions for proper use of the AEB with Pedestrian Detection system could result in serious injury or death.

- **The AEB with Pedestrian Detection system is a supplemental aid to the driver. It is not a replacement for the driver's attention to traffic conditions or responsibility to drive safely. It cannot prevent accidents due to carelessness or dangerous driving techniques.**
- **The AEB with Pedestrian Detection system does not function in all driving, traffic, weather and road conditions.**

The AEB with Pedestrian Detection system can assist the driver when there is a risk of a forward collision with

- a vehicle ahead in the travelling lane
- a pedestrian ahead in the travelling lane
- a cyclist ahead in the travelling lane

Intersection Assist can assist the driver when there is a risk of a forward collision:

- When you turn right or left and cross the path of an approaching vehicle.
- When you turn right or left, a pedestrian is detected in the forward direction and is expected to enter your vehicle's path.

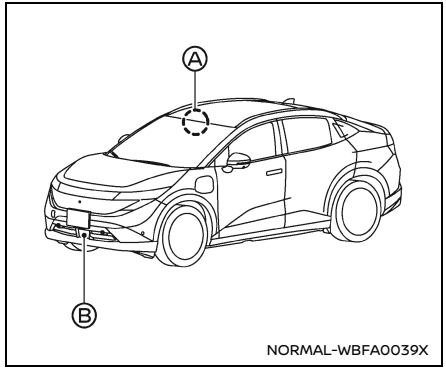

The AEB with Pedestrian Detection system uses a radar sensor Ⓑ located on the front of the vehicle to measure the distance to the vehicle ahead in the same lane.

For pedestrians and cyclists, the AEB system uses a camera Ⓐ installed behind the windshield in addition to the radar sensor.

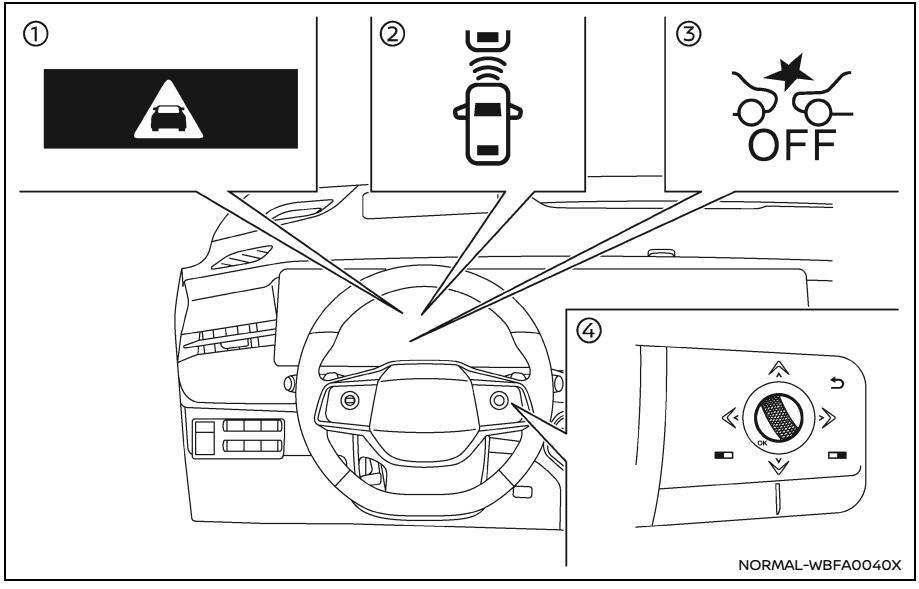

① AEB emergency warning indicator

② Vehicle ahead detection indicator (on the vehicle information display)

③ AEB system OFF warning light (on the meter panel)

④ Steering-wheel-mounted controls (right side)

AEB WITH PEDESTRIAN DETECTION SYSTEM OPERATION

The AEB with Pedestrian Detection system will function when your vehicle is driven at speeds above approximately 3 MPH (5 km/h).

For the pedestrian and cyclists detection function, the AEB with Pedestrian Detection system operates at speeds between 6 – 50 MPH (10 – 80 km/h).

If a risk of a forward collision is detected, the AEB with Pedestrian Detection system will firstly provide the warning to the driver by flashing the vehicle ahead detection indicator (yellow) in the vehicle information display and providing an audible alert. In addition, the system applies partial braking.

If the driver applies the brakes quickly and forcefully after the warning, and the AEB with Pedestrian Detection system detects that there is still the possibility of a forward collision, the system will automatically increase the braking force.

If the driver does not take action, the AEB with Pedestrian Detection system issues the second visual (flashing) (red) and audible warning. Then the system applies partial braking.

If the risk of a collision becomes imminent, the AEB with Pedestrian Detection system applies harder braking automatically.

While the AEB with Pedestrian Detection system is operating, you may hear the sound of brake operation. This is normal and indicates that the AEB with Pedestrian Detection system is operating prop-

erly.

NOTE:
The vehicle's stop lights come on when braking is performed by the AEB with Pedestrian Detection system.

Intersection Assist can operate at vehicle speeds between 6 –16 MPH (10 - 25 km/h).

The turn signal must be activated for Intersection Assist to detect an approaching vehicle. However, Intersection Assist may detect a pedestrian without the turn signal activated.

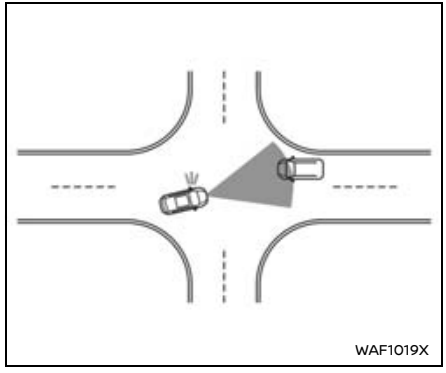

Intersection Assist for approaching vehicle

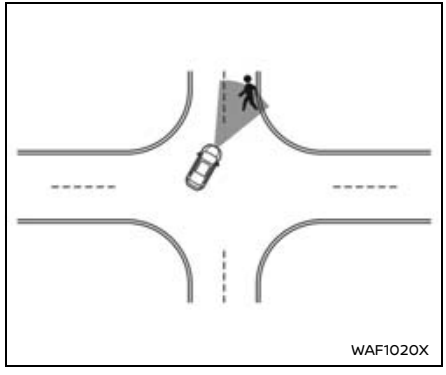

Intersection Assist for pedestrian

NOTE:
- **The vehicle's stop lights come on when braking is performed by the Intersection Assist.**
- **When the AEB with Pedestrian Detection system detects an obstacle in the path of the vehicle and displays the AEB warning, a noise may be heard from the front of the vehicle as the vehicle primes the brakes to improve response time.**

Depending on vehicle speed and distance to the vehicle, pedestrian or cyclists ahead, as well as driving and roadway conditions, the system may help the driver avoid a forward collision or may help mitigate the consequences of a collision should one be unavoidable.

If the driver is handling the steering wheel, accelerating or braking, the AEB with Pedestrian Detection system will function later or will not function.

The automatic braking will cease under the following conditions:

- When the steering wheel is turned as far as necessary to avoid a collision.
- When the accelerator pedal is depressed.
- When there is no longer a vehicle, pedestrian detected ahead.

If the AEB with Pedestrian Detection sys-

tem has stopped the vehicle, the vehicle will remain at a standstill for approximately 2 seconds before the brakes are released.

When the brake pedal is depressed while the brake is applied by the system, you may feel the pedal effort is changed and may hear a sound and vibration noise. This is normal and does not indicate a malfunction. In addition, the braking force can be increased by adding the pedal effort.

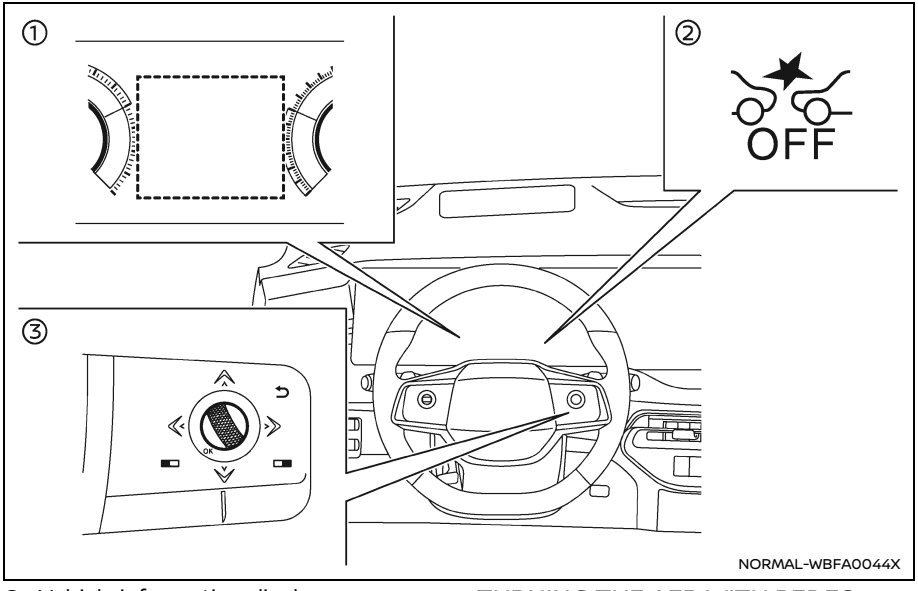

① Vehicle information display

② AEB system OFF warning light (on the meter panel)

③ Steering-wheel-mounted controls (right side)

TURNING THE AEB WITH PEDESTRIAN DETECTION SYSTEM ON/OFF

Basic information

Perform the following steps to turn the AEB with Pedestrian Detection system on or off.

1. Push the ◀ ▶ button until "Settings" appears in the vehicle information display and then push the scroll dial. Use the scroll dial to select "Driver Assistance." Then push the scroll dial.
2. Select "Emergency Assist" and push the scroll dial.
3. Select "Emergency Braking" and use the scroll dial to turn the system on or off.

When the AEB with Pedestrian Detection system is turned off, the AEB system OFF warning light illuminates.

NOTE:

- **The AEB with Pedestrian Detection system will be automatically turned ON when the EV system is restarted.**
- **The Intelligent Forward Collision Warning (I-FCW) system is integrated into the AEB system. There is not a separate selection for the I-FCW system. When the AEB with Pedestrian Detection system is turned off, the I-FCW system is also turned off.**
- **The AEB with Pedestrian Detection system cannot be turned off while driving.**

Setting Warning Timing

You can set Warning Timing using the "Settings" menu in the vehicle information display.

1. Push the ◀ ▶ button until "Settings" appears in the vehicle information display and then push the scroll dial. Use the scroll dial to select "Driver Assistance." Then push the scroll dial.
2. Select "Emergency Assist" and push the scroll dial.
3. Select "Warning Timing".
   - Later
   - Standard
   - Earlier

NOTE:
The Warning Timing will be retained even if the EV system is restarted.

AEB WITH PEDESTRIAN DETECTION SYSTEM LIMITATIONS

⚠ WARNING

Listed below are the system limitations for the AEB with Pedestrian Detection system. Failure to operate the vehicle in accordance with these system limitations could result in serious injury or death.

- **The AEB with Pedestrian Detection system cannot detect all vehicles, pedestrians or cyclists under all conditions.**
- **The AEB with Pedestrian Detection system does not detect the following:**
  - **Pedestrians that are small (for example, children), in a sitting position, operating toys/skateboards, on scooters or in wheelchairs, or not in an upright standing or walking position.**
  - **Animals of any size.**
  - **Obstacles (for example, cargo or debris) on the roadway or roadside.**
  - **Crossing vehicles.**
  - **Vehicles where the tires are difficult to see or the shape of the rear of the vehicle is unclear or obstructed.**
  - **Parked vehicles.**
- **The AEB with Pedestrian Detection system has some performance limitations.**
  - **If a stationary vehicle is in the vehicle's path, the system will not function when the vehicle approaches the stationary vehicle at speeds over approximately 50 MPH (80 km/h).**

- Pedestrian and cyclist detection will not function when the vehicle is driven at speeds over approximately 50 MPH (80 km/h) or below approximately 6 MPH (10 km/h).

- The AEB with Pedestrian Detection system may not function properly or detect a vehicle, pedestrian or cyclist ahead in the following conditions:
  - In poor visibility conditions (such as rain, snow, fog, dust storms, sand storms, smoke, and road spray from other vehicles).
  - If dirt, ice, snow, fog or other material is covering the radar sensor area or camera area of the windshield.
  - If strong light (for example, sunlight or high beams) enters the front camera or a sudden change in brightness occurs (for example, entering a tunnel or driving in lightning).
  - In dark or dimly lit conditions, such as at night or in tunnels, including cases where your vehicle's headlights are off or dim, or the tail lights of the vehicle ahead are off.
  - When the direction of the camera is misaligned.
  - When driving on a steep downhill slope, on roads with sharp curves, and/or bumpy or dirt roads.
  - If there is interference by other radar sources.
  - When your vehicle's position or movement is changed quickly or significantly (for example, lane change, turning vehicle, abrupt steering, sudden acceleration or deceleration).
  - When your vehicle or the vehicle, pedestrian or cyclist ahead moves quickly or significantly such that the system cannot detect and react in time (for example, pedestrian moving quickly toward the vehicle at close range, vehicle cutting in, changing lanes, making a turn, steering abruptly, sudden acceleration or deceleration).
  - When the vehicle, pedestrian or cyclist is offset from the vehicle's forward path.
  - If the speed difference between the two vehicles is small.
  - The pedestrian's profile is partially obscured or unidentifiable; for example, due to transporting luggage, pushing a stroller, wearing bulky or very loose-fitting clothing or accessories, or being in a unique posture (such as raising hands).
  - There is poor contrast of a person to the background, such as having clothing color or pattern which is similar to the background.

- When the system has never detected an obstacle since the vehicle was driven after the EV system was started.
- For approximately 15 seconds after starting the EV system
- If the vehicle ahead has a unique or unusual shape, extremely low or high clearance heights, or unusual cargo loading or is narrow (for example, a motorcycle).
- When the vehicle, pedestrian or cyclist is located near a traffic sign, a reflective area (for example, water on road), or is in a shadow.
- When multiple pedestrians or cyclists are grouped together.
- When the view of the pedestrian or cyclist is obscured by a vehicle or other object.

• The system performance may be degraded in the following conditions:
  - The vehicle is driven on a slippery road.
  - The vehicle is driven on a slope.
  - Excessively heavy baggage is loaded in the rear seat or the cargo area of your vehicle.

• The system is designed to automatically check the sensor's (radar and camera) functionality, within certain limitations. The system may not detect some forms of obstruction of the sensor area such as ice, snow or stickers, for example. In these cases, the system may not be able to warn the driver properly. Be sure that you check, clean and clear sensor areas regularly.

• In some road and traffic conditions, the AEB with Pedestrian Detection system may unexpectedly apply partial braking. When acceleration is necessary, depress the accelerator pedal to override the system.

• The AEB with Pedestrian Detection system may operate when a pattern, object, shadow or lights are detected that are similar to the outline of vehicles, pedestrians or cyclists, or if they are the same size and position as a vehicle or motorcycle's tail lights.

• The system may keep operating when the vehicle ahead is turning right or left.

• The system may operate when your vehicle is approaching and passing a vehicle ahead.

• Depending on the road shape (curved road, entrance and exit of the curve, winding road, lane regulation, under construction, etc.), the system may operate temporarily for the approaching vehicle in front of your vehicle.

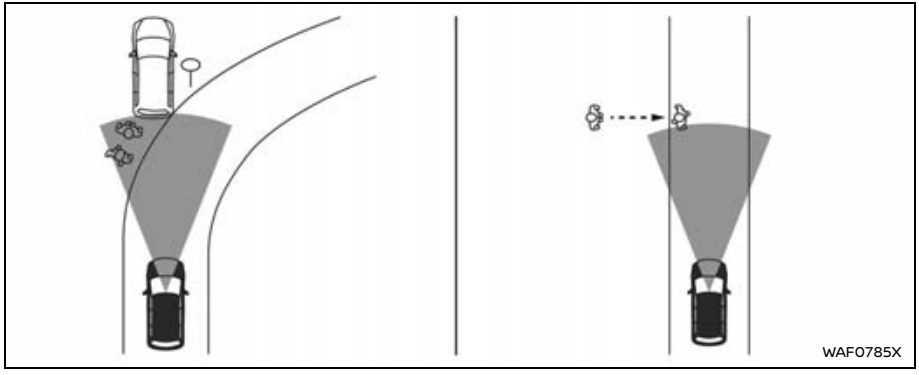

WARNING

- **The AEB with Pedestrian Detection system may react to:**
  - **objects on the roadside (traffic sign, guardrail, pedestrian, cyclist, motorcycle, vehicle, etc.)**
  - **pedestrians or cyclists when driving on the narrow alleys, etc.**
  - **pedestrians or cyclists who temporarily protrude into or approaching the driving lane to avoid the obstacles on the road shoulder**
  - **objects above road (low bridge, traffic sign, etc.)**
  - **objects on the road surface (railroad track, grate, steel plate, etc.)**
  - **objects in the parking garage (beam, pillar, etc.)**
  - **pedestrians, cyclists or motorcycles approaching the traveling lane**
  - **vehicles, pedestrians, cyclists, motorcycles or objects in adjacent lanes or close to the vehicle**
  - **approaching pedestrians, cyclists**
  - **objects on the road (such as trees)**
- **Braking distances increase on slippery surfaces.**
- **Excessive noise will interfere with the warning chime sound, and the chime may not be heard.**

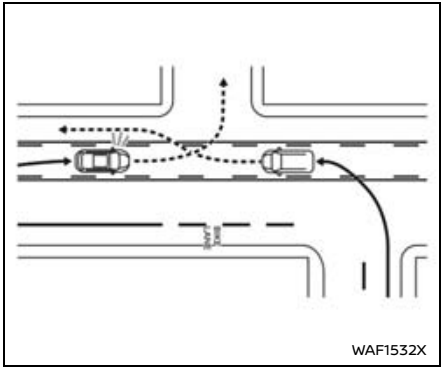

WARNING

- **Intersection Assist does not apply braking to approaching vehicles in front of your vehicle.**

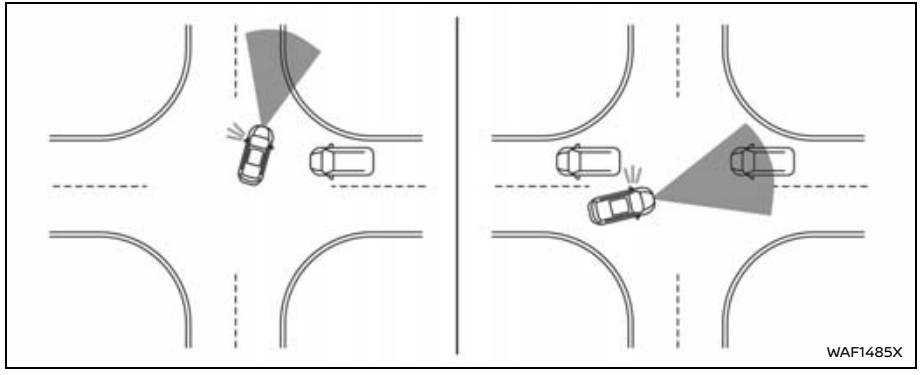

(In the intersection) After turning left/Approaching vehicles in a row

WARNING

In addition to the system limitations that apply to the AEB with Pedestrian Detection system, the following system limitations apply to the AEB with Pedestrian Detection while Intersection Assist is operating:

- **Intersection Assist may not detect an approaching vehicle or pedestrian in the following conditions:**
  - **When driving in a traffic lane separated by more than 2 lanes from approaching vehicles while making a right/left turn.**
  - **When not heading directly towards an approaching vehicle during a right/left turn.**
  - **Intersection Assist may not detect an approaching vehicle after you have already started your turn.**
  - **When turning sharply or on a very wide curve.**
  - **When the center line is not recognized by the system.**
  - **When there are a number of approaching vehicles following each other in a row.**

- **When the lane is wider or narrower than normal.**
- **When the center line is located close to a road marker.**

- **Intersection Assist may apply braking while making a right/left turn even if the risk of a collision is low.**
- **Intersection Assist may also apply braking when approaching vehicle movement cannot be predicted due to sudden left/right turns or deceleration of the approaching vehicles.**

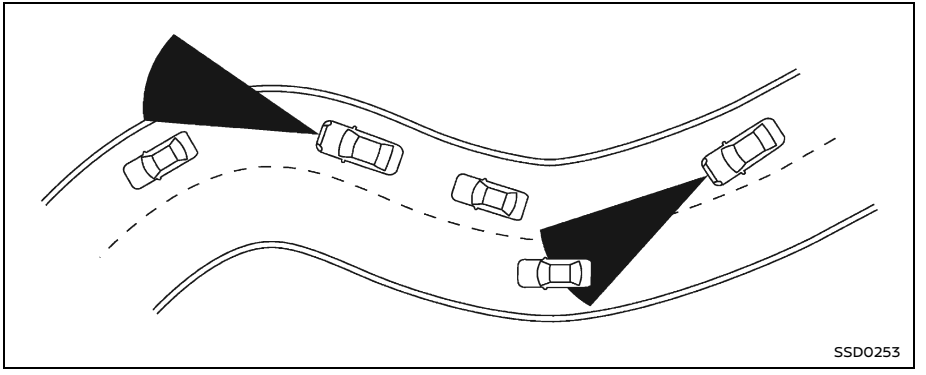

When driving on some roads, such as winding, hilly, curved, narrow roads, or roads which are under construction or on a slope, the sensor may detect vehicles in a different lane, or may temporarily not detect a vehicle traveling ahead. This may cause the system to work inappropriately.

The detection of vehicles may also be affected by vehicle operation (steering maneuver or traveling position in the lane, etc.) or vehicle condition. **If this occurs, the system may warn you by blinking the system indicator and sounding the chime unexpectedly. You will have to manually control the proper distance away from the vehicle traveling ahead.**

SYSTEM TEMPORARILY UNAVAILABLE

Condition A

In the following conditions, the AEB system OFF warning light will illuminate and the "Driving Aids Temporarily disabled Clean sensor area See Owner's Manual" warning message will appear in the vehicle information display. And the system will be turned off automatically.

- The camera area of the windshield is covered with moisture, snow, ice, dirt or some other object.
- The camera area of the windshield is continuously covered with dirt, etc.

Action to take:

Check that the windshield is clean and free from ice/mist in front of the camera. If necessary, operate the Max defogging/defrosting function or windshield deicer (if so equipped) to clear. This may take several minutes.

When the above conditions no longer exist, the AEB with Pedestrian Detection system will resume automatically.

Condition B

In the following conditions, the AEB system OFF warning light will illuminate and the "Driving Aids Temporarily limited Poor Visibility" warning message will appear in the vehicle information display.

- Strong light is shining onto the front of the vehicle.
- The camera area of the windshield is fogged up or covered with dirt, water, drops, ice, snow, etc. temporarily.

Action to take:

When the above conditions no longer exist, the AEB with Pedestrian Detection system will resume automatically.

Condition C

In the following condition, the AEB system OFF warning light will illuminate and the "Driving Aids temporarily limited Front Camera Too Hot" warning message will appear in the vehicle information display.

- The temperature of the front camera becomes high.

Action to take:

When the above conditions no longer exist, the AEB with Pedestrian Detection system will resume automatically.

Condition D

In the following conditions, the AEB system OFF warning light will illuminate and the "Driving Aids temporarily limited" warning message will appear in the vehicle information display.

- When the system check for the warning function did not end normally.
- When the vehicle is towed.

Action to take:

When the above conditions no longer exist, the AEB with Pedestrian Detection system will resume automatically.

Condition E

In the following condition, the AEB system OFF warning light will illuminate and the "Driving Aids Temporarily limited Radar interference" warning message will appear in the vehicle information display.

- When the radar sensor picks up interference from another radar source.

Action to take:

When the above condition no longer exists, the AEB with Pedestrian Detection system will resume automatically.

Condition F

In the following condition, the AEB system OFF warning light will illuminate and the "Driving Aids Temporarily disabled Clean sensor area See Owner's Manual" warning message will appear in the vehicle information display.

- The sensor area of the front of the vehicle is covered with dirt or is obstructed

Action to take:

If the warning message appears, stop the vehicle in a safe place and turn the EV system off. Clean the radar cover on the front of the vehicle with a soft cloth, and restart the EV system. If the warning message continues to appear, have the AEB with Pedestrian Detection system checked. It is recommended that you visit a NISSAN certified LEAF dealer for this service.

- When driving on roads with limited road structures or buildings (for

example, long bridges, deserts, snow fields, driving next to long walls).

Action to take:

When the above conditions no longer exist, the AEB with Pedestrian Detection system will resume automatically.

Condition G

When the Vehicle Dynamic Control (VDC) system is OFF, the AEB brake will not operate. In this case only visible and audible warning operates. The AEB system OFF warning light (orange) will illuminate and "Limited driver's aid VDC setting OFF" warning message will appear in the vehicle information display.

Action to take:

When the VDC system is ON, the AEB with Pedestrian Detection system will resume automatically.

SYSTEM MALFUNCTION

If the AEB with Pedestrian Detection system malfunctions, it will be turned off automatically, a chime will sound, the AEB system OFF warning light (orange) will illuminate and the "Malfunction See Owner's Manual" warning message will appear in the vehicle information display.

Action to take:

If the warning light (orange) comes on, stop the vehicle in a safe location. Turn the EV system off and restart the EV system. If the warning light continues to illuminate, have the AEB with Pedestrian Detection system checked. It is recommended that you visit a NISSAN certified LEAF dealer for this service.

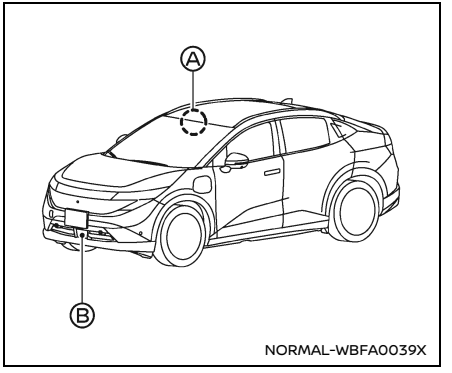

SYSTEM MAINTENANCE

Basic information

The radar sensor Ⓑ is located on the front of the vehicle. The camera Ⓐ is located on the upper side of the windshield.

To keep the AEB with Pedestrian Detection system operating properly, be sure to observe the following:

- Always keep the sensor area on the front of the vehicle and windshield clean.
- Do not strike or damage the areas around the sensors (ex. bumper, windshield).

- Do not cover or attach stickers or similar objects on the front of the vehicle near the sensor area. This could cause failure or malfunction.
- Do not attach metallic objects near the radar sensor area (brush guard, etc.). This could cause failure or malfunction.
- Do not place reflective materials, such as white paper or a mirror, on the instrument panel. The reflection of sunlight may adversely affect the camera unit's detection capability.
- Do not alter, remove or paint the front of the vehicle near the sensor area. Before customizing or restoring the sensor area, it is recommended that you visit a NISSAN certified LEAF dealer.

Radio frequency statement

For USA

This device complies with Part 15 of the FCC Rules.

Operation is subject to the following two conditions:

1. **this device may not cause harmful interference and**
2. **this device must accept any interference received, including interference that may cause undesired operation.**

Changes or modifications made to this equipment not expressly approved by Robert Bosch GmbH may void the FCC authorization to operate the equipment.

This equipment has tested and found to comply with the limits for a Class A digital device, pursuant to Part 15 of the FCC Rules. These limits are designed to provide reasonable protection against harmful interference when the equipment is operated in a commercial environment. This equipment generates, uses, and can radiate radio frequency energy and, if not installed and used in accordance with the instruction manual, may cause harmful interference to radio communications. Operation of this equipment in a residential area is likely to cause harmful interference in which cause the user will be required to correct the interference at his own expense.

Radio frequency radiation exposure information:

This equipment complies with FCC radiation exposure limits set forth for an uncontrolled equipment. This equipment should be installed and operated with minimum distance of 20 cm between the radiator and your body.

This transmitter must not be co-located or operating in conjunction with any other antenna or transmitter.

For Canada

This device contains license-exempt transmitter(s)/receiver(s) that comply with Innovation, Science and Economic Development Canada's license-exempt RSS(s). Operation is subject to the following two conditions: (1) This device may not cause interference. (2) This device must accept any interference, including interference that may cause undesired operation of the device.

L'émetteur/récepteur exempt de licence contenu dans le présent appareil est conforme aux CNR d'Innovation, Sciences et Développement économique Canada applicables aux appareils radio exempts de licence. L'exploitation est autorisée aux deux conditions suivantes: (1) L'appareil ne doit pas produire de brouillage; (2) L'appareil doit accepter tout brouillage radioélectrique subi, même si le brouillage est susceptible d'en compromettre le fonctionnement.

INTELLIGENT FORWARD COLLISION WARNING (I-FCW)

BASIC INFORMATION

WARNING

Failure to follow the warnings and instructions for proper use of the I-FCW system could result in serious injury or death.

- **The I-FCW system helps warn the driver before a collision but will not avoid a collision. It is the driver's responsibility to stay alert, drive safely and be in control of the vehicle at all times.**

The I-FCW system can help alert the driver when there is a sudden braking of a second vehicle traveling in front of the vehicle ahead in the same lane.

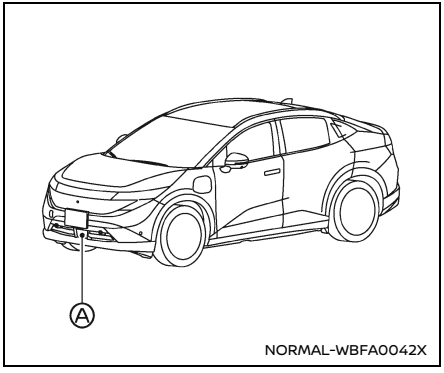

The I-FCW system uses a radar sensor Ⓐ located on the front of the vehicle to measure the distance to a second vehicle ahead in the same lane.

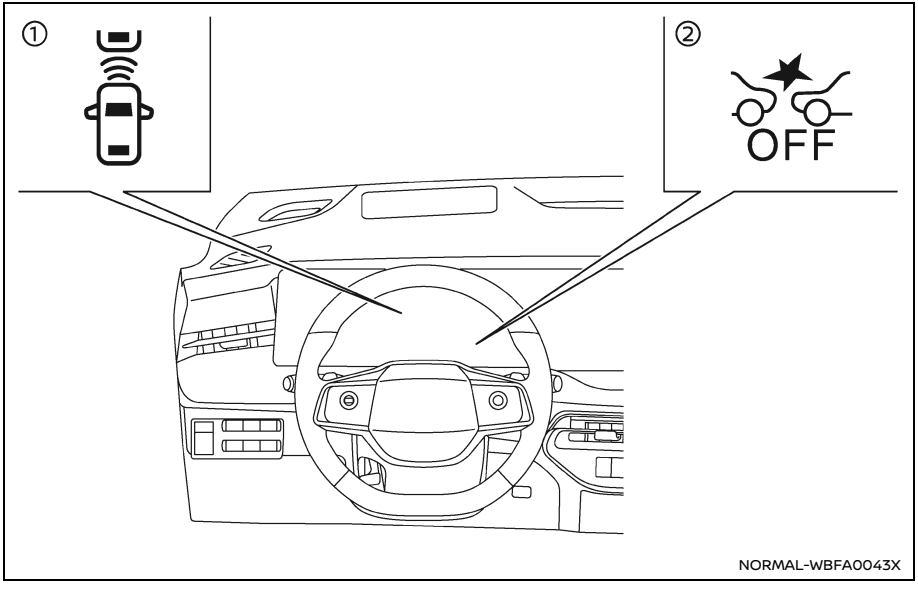

① Vehicle ahead detection indicator (on the vehicle information display)

② Automatic Emergency Braking (AEB) system OFF warning light (on the meter panel)

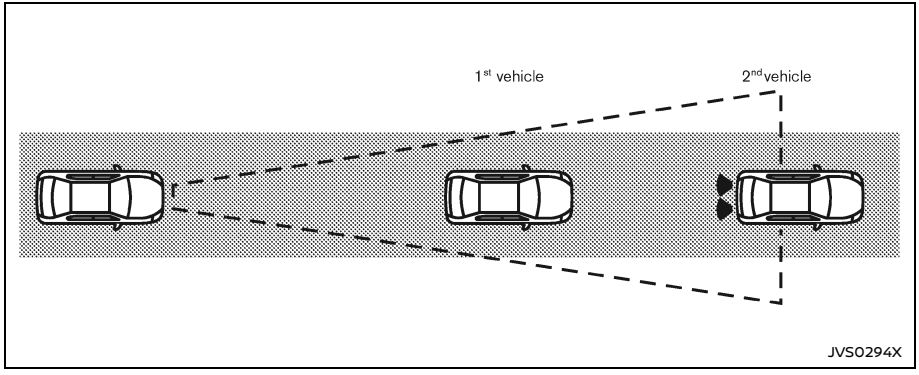

I-FCW SYSTEM OPERATION

The I-FCW system operates at speeds above approximately 3 MPH (5 km/h).

If there is a potential risk of a forward collision, the I-FCW system will warn the driver by blinking the vehicle ahead detection indicator, and sounding an audible alert.

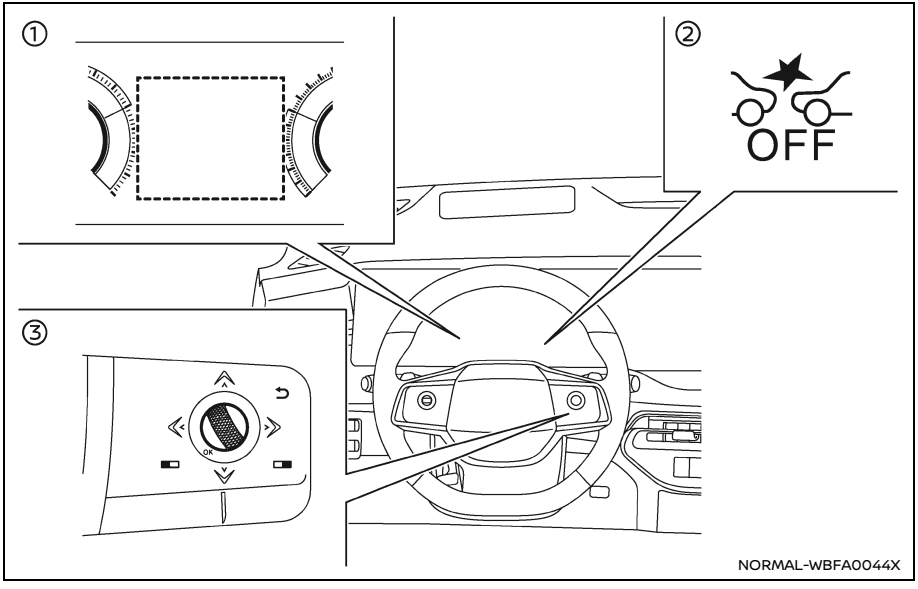

① Vehicle information display

② AEB system OFF warning light (on the meter panel)

③ Steering-wheel-mounted controls (right side)

TURNING THE I-FCW SYSTEM ON/OFF

Perform the following steps to turn the I-FCW system on or off.

1. Push the ◀ ▶ button until "Settings" appears in the vehicle information display and then push the scroll dial. Use the scroll dial to select "Driver Assistance." Then push the scroll dial.
2. Select "Emergency Assist" and push the scroll dial.
3. Select "Emergency Braking" and use the scroll dial to turn the system on or off.

When the I-FCW system is turned off, the AEB system OFF warning light (orange) illuminates.

NOTE:

- **The I-FCW system will be automatically turned on when the EV system is restarted.**
- **The I-FCW system is integrated into the AEB system. There is not a separate selection for the I-FCW system. When the AEB system is turned off, the I-FCW system is also turned off.**
- **The AEB with Pedestrian Detection system cannot be turned off while driving.**

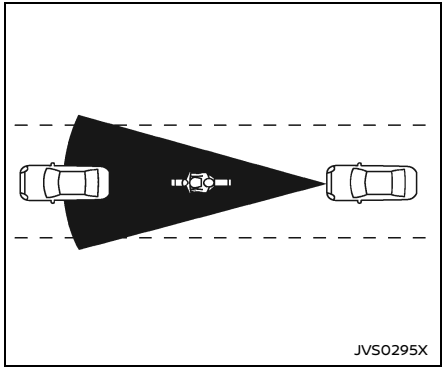

Illustration A

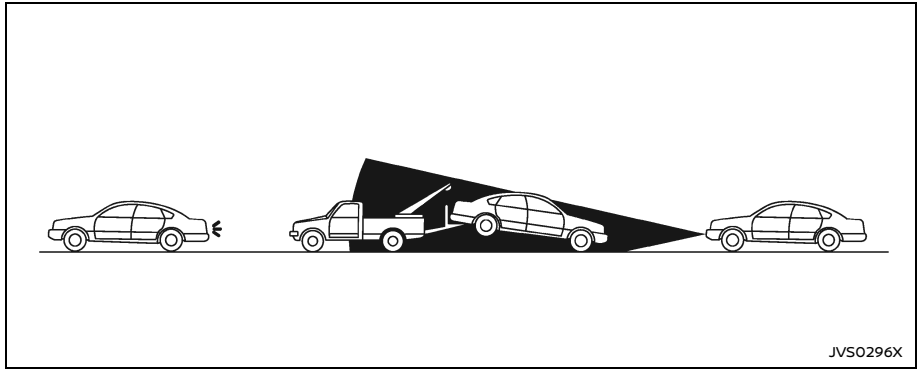

Illustration B

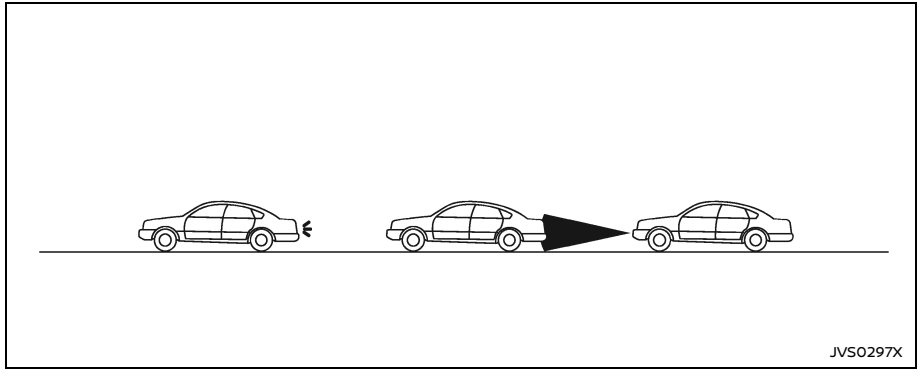

Illustration C

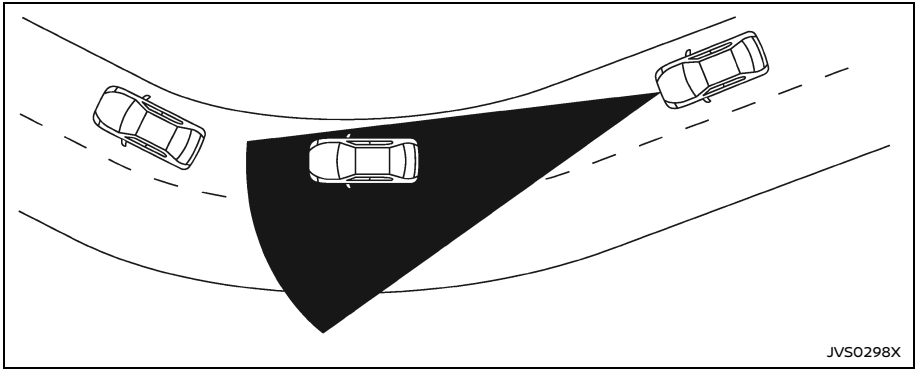

Illustration D

I-FCW SYSTEM LIMITATIONS

WARNING

Listed below are the system limitations for the I-FCW system. Failure to operate the vehicle in accordance with these system limitations could result in serious injury or death.

- **The I-FCW system cannot detect all vehicles under all conditions.**
- **The radar sensor does not detect the following objects:**
  - **Pedestrians, animals or obstacles in the roadway**
  - **Oncoming vehicles**
  - **Crossing vehicles**
- **(Illustration A) The I-FCW system does not function when a vehicle ahead is a narrow vehicle, such as a motorcycle.**
- **The radar sensor may not detect a vehicle ahead in the following conditions:**
  - **Snow or heavy rain**
  - **Dirt, ice, snow or other material covering the radar sensor**
  - **Interference by other radar sources**
  - **Snow or road spray from travelling vehicles.**
  - **Driving in a tunnel**
- **(Illustration B) When the vehicle ahead is being towed.**
- **(Illustration C) When the distance to the vehicle ahead is too close, the beam of the radar sensor is obstructed.**
- **(Illustration D) When driving on a steep downhill slope or roads with sharp curves.**
- **The system is designed to automatically check the sensor's functionality, within certain limitations. The system may not detect some forms of obstruction of the sensor area such as ice, snow, stickers, for example. In these cases, the system may not be able to warn the driver properly. Be sure that you check, clean and clear the sensor area regularly.**
- **Excessive noise will interfere with the warning chime sound, and the chime may not be heard.**

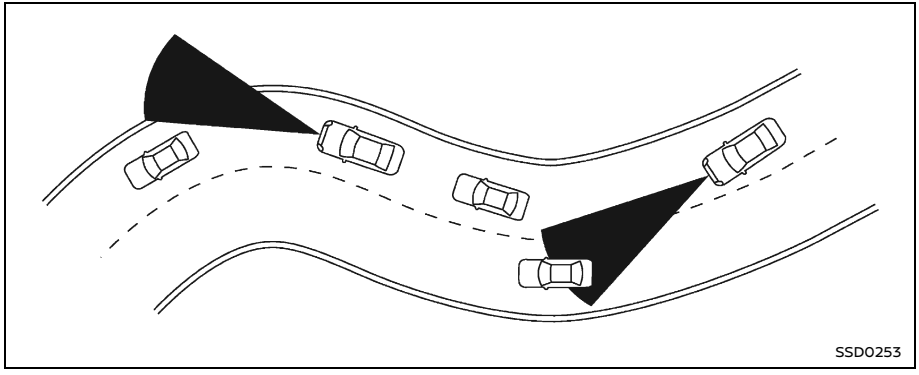

When driving on some roads, such as winding, hilly, curved, narrow roads, or roads which are under construction, the radar sensor may detect vehicles in a different lane, or may temporarily not detect a vehicle traveling ahead. This may cause the I-FCW system to work inappropriately.

The detection of vehicles may also be affected by vehicle operation (steering maneuver or traveling position in the lane, etc.) or vehicle condition. **If this occurs, the system may warn you by blinking the vehicle ahead detection indicator and sounding the chime unexpectedly. You will have to manually control the proper distance away from the vehicle traveling ahead.**

SYSTEM TEMPORARILY UNAVAILABLE

Condition A

When the radar sensor picks up interference from another radar source, making it impossible to detect a vehicle ahead, the I-FCW system is automatically turned off. The AEB system OFF warning light (orange) will illuminate and the “Driving Aids Temporarily limited Radar interference” warning message will appear in the vehicle information display.

Action to take:

When the above conditions no longer exist, the I-FCW system will resume automatically.

Condition B

Under the following conditions, making it impossible to detect a vehicle ahead, the I-FCW system is automatically turned off.

The AEB system OFF warning light (orange) will illuminate and the "Driving Aids Temporarily disabled Clean sensor area See Owner's Manual" warning message will appear in the vehicle information display.

- When the sensor area of the front of the vehicle is covered with dirt or is obstructed

Action to take:

If the warning light (orange) flashes, stop the vehicle in a safe place, push the P (Park) button to engage the P (Park) position and turn the EV system off. Clean the radar cover on the front of the vehicle with a soft cloth, and restart the EV system. If the warning light continues to illuminate, have the I-FCW system checked. It is recommended you visit a NISSAN certified LEAF dealer for this service.

- When driving on roads with limited road structures or buildings (for example, long bridges, deserts, snow fields, driving next to long walls)

Action to take:

When the above conditions no longer exist, the I-FCW system will resume automatically.

See "Driver assistance troubleshooting guide" (P.362).

SYSTEM MALFUNCTION

If the I-FCW system malfunctions, it will be turned off automatically, a chime will sound, the AEB system OFF warning light (orange) will illuminate and the "Malfunction See Owner's Manual" warning message will appear in the vehicle information display.

Action to take:

If the warning light (orange) illuminates, stop the vehicle in a safe location. Turn the EV system off and restart the EV system. If the warning light continues to illuminate, have the I-FCW system checked. It is recommended you visit a NISSAN certified LEAF dealer for this service.

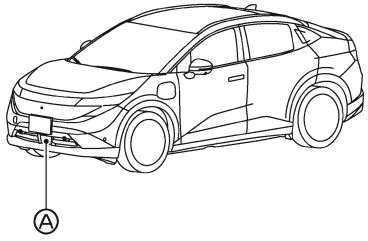

NORMAL-WBFA0042X

SYSTEM MAINTENANCE

Basic information

The radar sensor Ⓐ is located on the front of the vehicle.

To keep the system operating properly, be sure to observe the following:

- Always keep the sensor area on the front of the vehicle clean.
- Do not strike or damage the areas around the sensor.
- Do not cover or attach stickers or similar objects on the front bumper near the sensor area. This could cause failure or malfunction.
- Do not attach metallic objects near the sensor area (brush guard, etc.). This could cause failure or malfunction.
- Do not alter, remove or paint the front bumper. It is recommended you contact a NISSAN certified LEAF dealer before customizing or restoring the front bumper.

Radio frequency statement

NOTE:

FCC Notice:

For USA:

This device complies with Part 15 of the FCC Rules. Operation is subject to the following two conditions: (1) this device may not cause harmful interference, and (2) this device must accept any interference received, including interference that may cause undesired operation.

NOTE:

Changes or modifications made to this equipment not expressly approved by Robert Bosch GmbH may void the FCC authorization to operate the equipment.

This equipment has tested and found to comply with the limits for a Class A digital device, pursuant to Part 15 of the FCC Rules. These limits are designed to pro-

vide reasonable protection against harmful interference when the equipment is operated in a commercial environment. This equipment generates, uses, and can radiate radio frequency energy and, if not installed and used in accordance with the instruction manual, may cause harmful interference to radio communications. Operation of this equipment in a residential area is likely to cause harmful interference in which cause the user will be required to correct the interference at his own expense.

Radio frequency radiation exposure information:

This equipment complies with FCC radiation exposure limits set forth for an uncontrolled equipment. This equipment should be installed and operated with minimum distance of 20 cm between the radiator and your body. This transmitter must not be co-located or operating in conjunction with any other antenna or transmitter.

For Canada:

This device contains licence-exempt transmitter(s)/receiver(s) that comply with Innovation, Science and Economic Development Canada's licence-exempt RSS(s). Operation is subject to the following two conditions: (1) This device may not cause interference. (2) This device must accept any interference, including interference that may cause undesired operation of the device.

L'émetteur/récepteur exempt de licence contenu dans le présent appareil est conforme aux CNR d'Innovation, Sciences et Développement économique Canada applicables aux appareils radio exempts de licence. L'exploitation est autorisée aux deux conditions suivantes: (1) L'appareil ne doit pas produire de brouillage; (2) L'appareil doit accepter tout brouillage radioélectrique subi, même si le brouillage est susceptible d'en compromettre le fonctionnement.

INTELLIGENT DRIVER ALERTNESS (I-DA)

BASIC INFORMATION

⚠ WARNING

Failure to follow the warnings and instructions for proper use of the I-DA system could result in serious injury or death.

- **The I-DA system is only a warning to inform the driver of a potential lack of driver attention or drowsiness. It will not steer the vehicle or prevent loss of control.**
- **The I-DA system does not detect and provide an alert of the driver's lack of attention or fatigue in every situation.**
- **It is the driver's responsibility to:**
  - **Stay alert.**
  - **Drive safely.**
  - **Keep the vehicle in the traveling lane.**
  - **Be in control of the vehicle at all times.**
  - **Avoid driving when tired.**
  - **Avoid distractions (texting, etc).**

The I-DA system helps alert the driver if the system detects a lack of attention or driving fatigue.

The system monitors driving style and steering behavior over a period of time, and it detects changes from the normal pattern. If the system detects that driver attention is decreasing over a period of time, the system uses audible and visual warnings to suggest that the driver take a break.

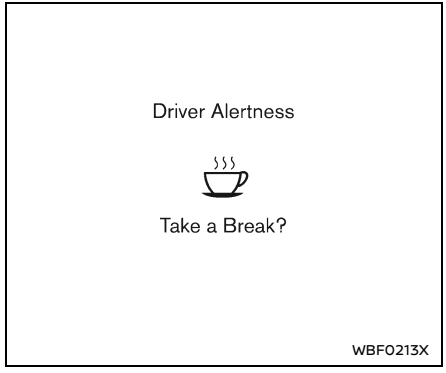

Example

I-DA SYSTEM OPERATION

If the system detects driver fatigue or that driver attention is decreasing, the message “Take a Break?” appears in the vehicle information display and a chime sounds when the vehicle is driven at speeds above 37 MPH (60 km/h).

The system continuously monitors driver attention and can provide multiple warnings per trip.

The system resets and starts reassessing driving style and steering behavior when the power switch is cycled from the ON to the OFF position and back to the ON position.

The system will not operate when Steering Assist system is activated.

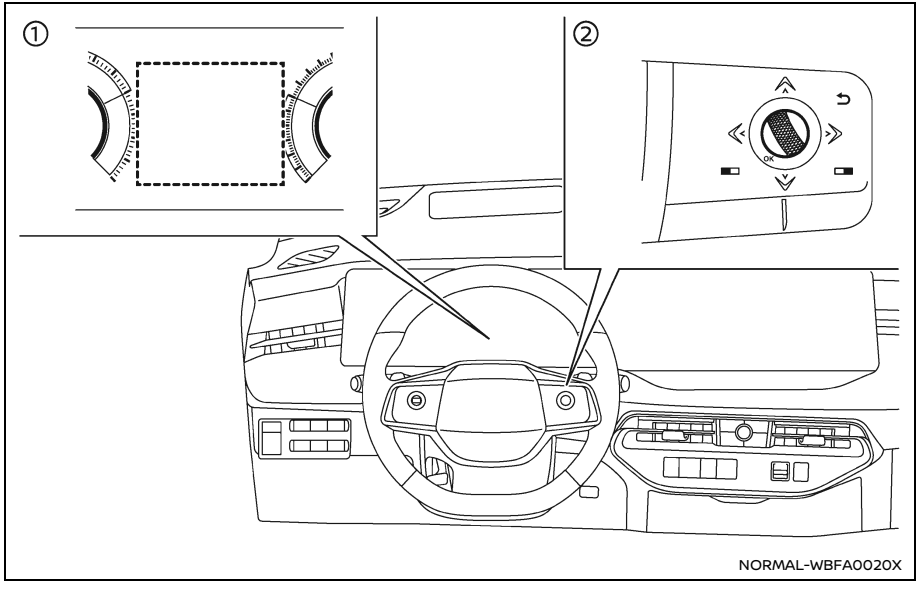

① Vehicle information display
② Steering-wheel-mounted control (right side)

HOW TO ENABLE/DISABLE THE I-DA SYSTEM

Perform the following steps to enable or disable the I-DA system.

1. Push the ◀ ▶ button until "Settings" appears in the vehicle information display and push the scroll dial. Use the scroll dial to select "Driver Assistance." Then push the scroll dial.
2. Select "Driver Monitor" and push the scroll dial.
3. Select "Driver Alertness" and use the scroll dial to turn the system on or off.

NOTE:

- **The I-DA system will automatically be turned on when the EV system is restarted.**
- **As long as Steering Assist is activated, the I-DA system will be deactivated.**

I-DA SYSTEM LIMITATIONS

⚠ WARNING

Listed below are the system limitations for the I-DA system. Failure to operate the vehicle in accordance with these system limitations could result in serious injury or death.

- **The I-DA system may not operate properly and may not provide an alert in the following conditions:**
  - **Poor road conditions such as an uneven road surface or pot holes.**
  - **Strong side wind.**
  - **If you have adopted a sporty driving style with higher cornering speeds or higher rates of acceleration.**

- **Frequent lane changes or changes to vehicle speed.**
- **The I-DA system will not provide an alert in the following conditions:**
  - **Vehicle speeds lower than 37 MPH (60 km/h).**
  - **Short lapses of attention.**
  - **Instantaneous distractions such as dropping an object.**

SYSTEM MALFUNCTION

If the I-DA system malfunctions, the "Malfunction See Owner's Manual" warning message will appear in the vehicle information display and the function will be stopped automatically.

Action to take

Stop the vehicle in a safe location, place the vehicle in P (Park) position, turn the EV system off and restart the EV system. If the warning message continues to appear, have the system checked. It is recommended that you visit a NISSAN certified LEAF dealer for this service.

BASIC INFORMATION

WARNING

Failure to follow the warnings and instructions for proper use of the RAB system could result in serious injury or death.

- **The RAB system is a supplemental aid to the driver. It is not a replacement for proper driving procedures. Always use the side and rear mirrors and turn and look in the direction you will move before and while backing up. Never rely solely on the RAB system. It is the driver's responsibility to stay alert, drive safely, and be in control of the vehicle at all times.**
- **There is a limitation to the RAB system capability. The RAB system is not effective in all situations.**

The RAB system can assist the driver when backing up and approaching an object directly behind the vehicle. If an item is detected, and the driver fails to stop, this feature can automatically engage the brakes to help avoid a rear collision or help lessen the severity of an impact.

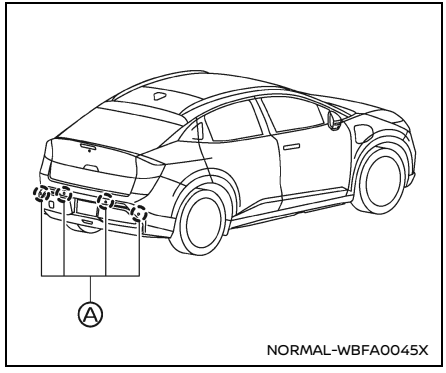

The RAB system detects obstacles behind the vehicle using the sonar sensors Ⓐ located on the rear bumper.

NOTE:
You can temporarily cancel the sonar function and the RAB system in the vehicle. For additional information, see "Front and rear sonar system (if so equipped)" (P.470).

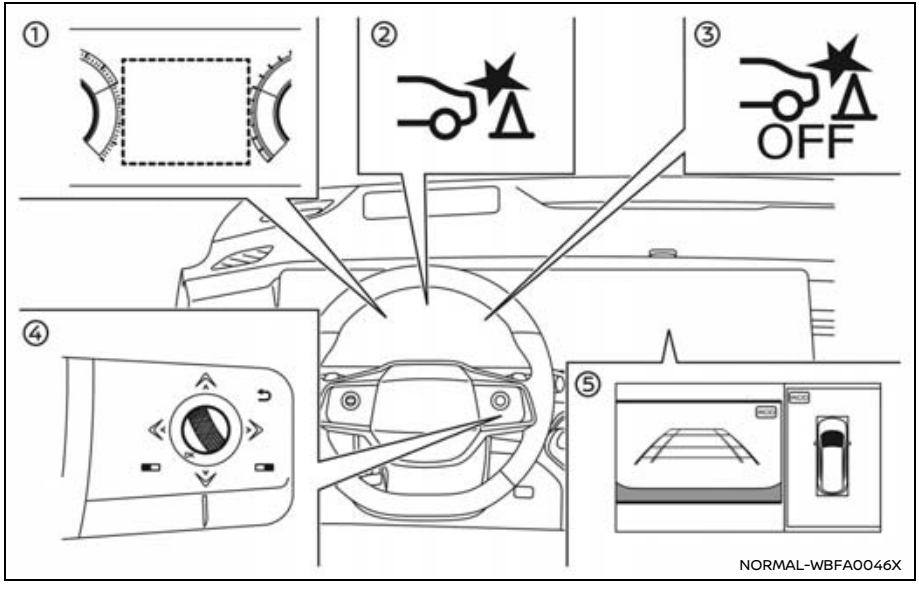

① Vehicle information display
② RAB system warning indicator (on the vehicle information display)
③ RAB system OFF warning light (on the meter panel)
④ Steering-wheel-mounted controls (right side)
⑤ Center display (if so equipped)

RAB SYSTEM OPERATION

When the shift button is in the R (Reverse) position and the vehicle speed is less than approximately 9 MPH (15 km/h), the RAB system operates.

If a risk of a collision with an obstacle is detected when your vehicle is backing up, the RAB system warning indicator will flash in the vehicle information display, a red frame will appear in the center display (models with the Intelligent Around View® Monitor system), and the system will chime three times. The system will then automatically apply the brakes. After the automatic brake application, the driver must depress the brake pedal to maintain brake pressure.

NOTE:

- **The stop lights of the vehicle come on when braking is performed by the RAB system.**
- **When the brakes operate, a noise may be heard. This is not a malfunction.**

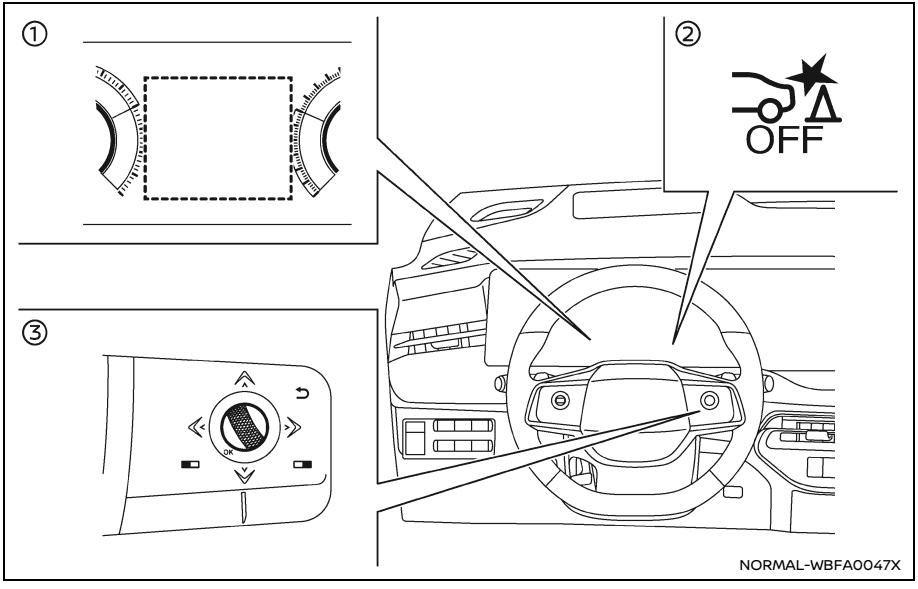

① Vehicle information display
② RAB system OFF warning light
③ Steering-wheel-mounted control (right side)

HOW TO ENABLE/DISABLE THE RAB SYSTEM

Perform the following steps to turn the RAB system ON or OFF.

1. Push the ◀ ▶ button until "Settings" appears in the vehicle information display and then push the scroll dial. Use the scroll dial to select "Driver Assistance." Then push the scroll dial.
2. Select "Parking Assist" and push the scroll dial.
3. Select "Rear Auto Braking" and use the scroll dial to turn the system on or off.

When the RAB system is turned off, the RAB system OFF warning light illuminates when the shift button is in the R (Reverse) position.

The RAB system OFF warning light will also illuminate when the shift button is in the R (Reverse) position and the RAB system is ON if the sonar sensors have been temporarily disabled using the "Parking Assist" setting.

NOTE:

- **The RAB system will be automatically turned on when the EV system is restarted.**
- **When the shift button is in the R (Reverse) position and the Parking Assist screen is displayed in the vehicle information display the RAB system can be disabled temporarily by pushing the scroll dial on the steering wheel.**

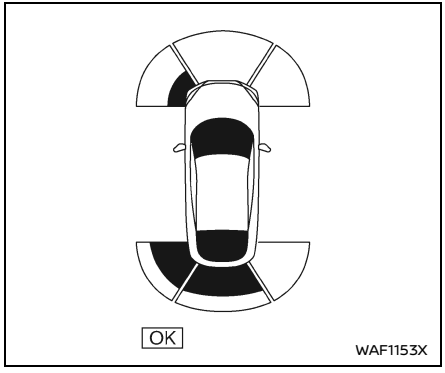

RAB SYSTEM LIMITATIONS

WARNING

Listed below are the system limitations for the RAB system. Failure to follow the warnings and instructions for proper use of the RAB system could result in serious injury or death.

- **When the vehicle approaches an obstacle while the accelerator or brake pedal is depressed, the function may not operate or the start of the operation may be delayed. The RAB system may not operate or may not perform sufficiently due to vehicle conditions, driving conditions, the traffic environment, the weather, road surface conditions, etc. Do not wait for the system to operate. Operate the brake pedal by yourself as soon as necessary.**
- **If it is necessary to override RAB operation, strongly press the accelerator pedal.**
- **Always check your surroundings and turn to check what is behind you before and while backing up. The RAB system detects stationary objects behind the vehicle. The RAB system does not detect the following objects:**
  - **Moving objects**
  - **Low objects**
  - **Narrow objects**
  - **Wedge-shaped objects**
  - **Complex-shaped objects**
  - **Multiple object in close**
  - **Objects close to the bumper (less than approximately 1 ft [30 cm])**
  - **Objects that suddenly appear**
  - **Thin objects such as rope, wire, chain, etc.**
- **The RAB system may not operate for pedestrians or animals.**
- **The RAB system may not operate for the following obstacles:**
  - **Obstacles located high off the ground**
  - **Obstacles in a position offset from your vehicle**
  - **Obstacles, such as spongy materials or snow, that have soft outer surfaces and can easily absorb a sound wave**
- **The RAB system may not operate in the following conditions:**
  - **There is rain, snow, ice, dirt, etc., attached to the sonar sensors.**
  - **A loud sound is heard in the area around the vehicle.**
  - **The surface of the obstacle is diagonal to the rear of the vehicle.**
  - **The sonar sensors or the area around them are extremely hot or cold.**

- **The RAB system may unintentionally operate in the following conditions:**
  - **There is overgrown grass in the area around the vehicle.**
  - **There is a structure (e.g., a wall, toll gate equipment, a narrow tunnel, a parking lot gate) near the side of the vehicle.**
  - **There are bumps, protrusions, or manhole covers on the road surface.**
  - **The vehicle is driving through a draped flag or a curtain.**
  - **The vehicle is driving on a steep hill.**
  - **There is an accumulation of snow or ice behind the vehicle.**
  - **An ultrasonic wave source, such as another vehicle's sonar, is near the vehicle.**
- **Once the automatic brake control operates, it does not operate again if the vehicle approaches the same obstacle.**
- **The automatic brake control can only operate for a short period of time. Therefore, the driver must depress the brake pedal.**

- **In the following situations, the RAB system may not operate properly or may not function sufficiently:**
  - **The vehicle is driven in bad weather (rain, fog, snow, etc.).**
  - **The vehicle is driven on a steep hill.**
  - **The vehicle's posture is changed (e.g., when driving over a bump).**
  - **The vehicle is driven on a slippery road.**
  - **The vehicle is turned sharply by turning the steering wheel fully.**
  - **Snow chains are used.**
  - **Wheels or tires other than NISSAN recommended are used.**
  - **The brakes are cold at low ambient temperatures or immediately after driving has started.**
  - **The braking force becomes poor due to wet brakes after driving through a puddle or washing the vehicle.**

- **Turn the RAB system off in the following conditions to prevent the occurrence of an unexpected activation resulting from sudden system operation:**
  - **The vehicle is towed.**
  - **The vehicle is carried on a flatbed truck.**
  - **The vehicle is on the chassis dynamometer.**
  - **The vehicle drives on an uneven road surface.**
  - **Suspension parts other than those designated as genuine parts are used. (If the vehicle height or the vehicle body inclination is changed, the system may not detect an obstacle correctly.)**
  - **If the vehicle is using an accessory like a bike rack or cargo carrier that blocks the sensors.**
- **Excessive noise (e.g., audio system volume, an open vehicle window) will interfere with the chime sound, and it may not be heard.**

See "Driver assistance troubleshooting guide" (P.362).

SYSTEM MALFUNCTION

Basic information

If the RAB system malfunctions, it will be turned off automatically, the RAB system OFF warning light will illuminate, and the "Malfunction See Owner's Manual" warning message will appear in the vehicle information display.

Action to take

If the warning light illuminates, park the vehicle in a safe location, turn the EV system off, and restart the EV system. If the warning light continues to illuminate, have the RAB system checked. It is recommended that you visit a NISSAN certified LEAF dealer for this service.

NOTE:
If the RAB system cannot be operated temporarily, the RAB system OFF warning light blinks.

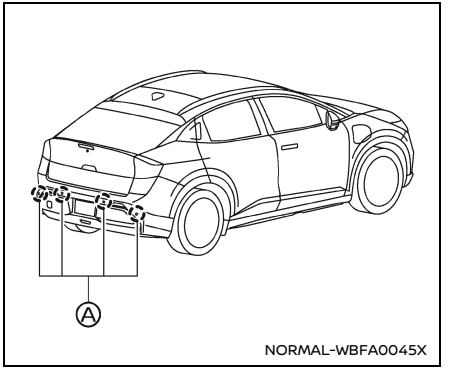

NORMAL-WBFA0045X

SYSTEM MAINTENANCE

The sonar sensors Ⓐ are located on the rear bumper. Observe the following items to ensure proper operation of the system:

- Always keep the sonar sensors clean.
- If the sonar sensors are dirty, wipe them off with a soft cloth while being careful to not damage them.
- The sonar sensors may be blocked by temporary ambient conditions such as splashing water, mist or fog. The blocked condition may also be caused by objects such as ice, frost or dirt obstructing the sonar sensors. Check for and remove objects obstructing the area around the sonar sensors.
- Do not subject the area around the sonar sensors to strong impact. Also, do not remove or disassemble the sonar sensors. If the sonar sensors and peripheral areas are deformed in an accident, etc., have the sonar sensors checked. It is recommended that you visit a NISSAN certified LEAF dealer for this service.
- Do not attach stickers (including transparent material), install accessories or apply additional paint on the sonar sensors and their surrounding areas. This may cause a malfunction or improper operation.
- When washing the vehicle using a high-pressure washer, do not apply direct washer pressure on the sonar sensors. This may cause a malfunction of the sonar sensors.

INCREASING POWER ECONOMY

The actual driving range will vary depending upon:

- speed
- vehicle load
- electrical load from vehicle accessories
- traffic and road conditions

NISSAN recommends the following driving habits to help maximize driving range:

Before driving:

- Follow recommended scheduled maintenance.
- Keep tires inflated to the correct pressure.
- Keep wheels in correct alignment.
- Pre-heat or pre-cool the interior cabin while the vehicle is charging.
- Remove unnecessary cargo from the vehicle.

While driving:

- Drive in ECO mode
  - The ECO mode helps reduce power consumption by reducing acceleration when compared to the same accelerator pedal position in the STANDARD mode.
- Drive at a constant speed. Maintain cruising speeds with constant accelerator pedal positions or use the cruise control system when appropriate.
- Accelerate slowly and smoothly. Gently depress and release the accelerator pedal for acceleration and deceleration.
- Drive at moderate speeds on the highway.
- Avoid frequent stopping and braking. Maintain a safe distance behind other vehicles.
- Turn off the climate control system when it is not necessary.
- Select a moderate temperature setting for heating or cooling to help reduce power consumption.
- Use the “Fan ONLY” to help reduce power consumption. See "OPTIONS" (P.321).
- In cold weather, use the heated seats (if so equipped) and the heated steering wheel (if so equipped) as a substitute for the climate control system to help reduce power consumption.
- Use the climate control system and close windows to reduce drag when cruising at highway speed.
- Release the accelerator pedal to slow down and do not apply the brakes when traffic and road conditions allow.
  - This vehicle is equipped with a regenerative brake system. The primary purpose of regenerative brake system is to provide some power to recharge the Li-ion battery and extend driving range. A secondary benefit is “engine braking” that operates based on Li-ion battery conditions. In the D (Drive) or B (if so equipped) position, when the accelerator pedal is released, the regenerative brake system provides some deceleration and some power to the Li-ion battery.

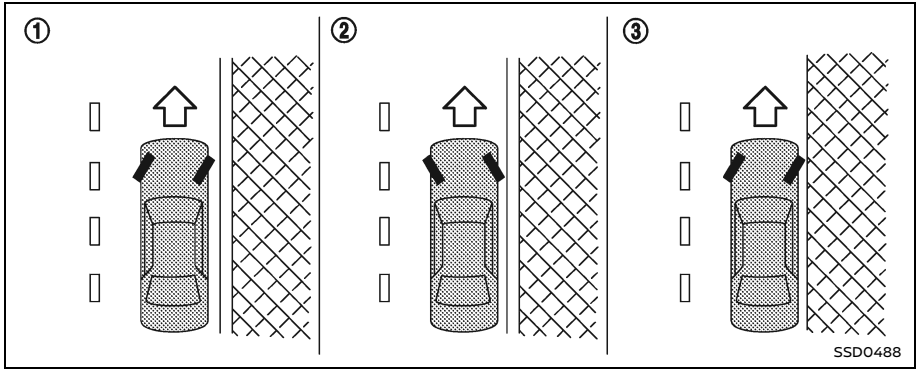

WARNING

- **Do not stop or park the vehicle over flammable materials such as dry grass, waste paper or rags. They may ignite and cause a fire.**
- **Never leave the vehicle in the READY to drive mode while the vehicle is unattended.**
- **Do not leave children unattended inside the vehicle. They could unknowingly activate switches or controls. Unattended children could become involved in serious accidents.**
- **To help avoid risk of injury or death through unintended operation of the vehicle and/or its systems, do not leave children, people who require the assistance of others or pets unattended in your vehicle. Additionally, the temperature inside a closed vehicle on a warm day can quickly become high enough to cause a significant risk of injury or death to people and pets.**
- **Safe parking procedures require that both the parking brake be applied and the shift position P (Park) is selected. Failure to do so could cause the vehicle to move unexpectedly or roll away and result in an accident.**
- **Make sure the shift position other than P (Park) cannot be selected without depressing the foot brake pedal.**

1. Apply the parking brake.
2. Push the P (Park) button to shift to the P (Park) position.
3. To help prevent the vehicle from rolling into the street when parked on a sloping drive way, it is a good practice to turn the wheels as illustrated.
   - HEADED DOWNHILL WITH CURB: ①
     Turn the wheels into the curb and move the vehicle forward until the curb side wheel gently touches the curb.
   - HEADED UPHILL WITH CURB: ②
     Turn the wheels away from the curb and move the vehicle back until the curb side wheel gently touches the curb.

- HEADED UPHILL OR DOWNHILL, NO CURB: ③
  Turn the wheels toward the side of the road so the vehicle will move away from the center of the road if it moves.

4. Place the power switch in the OFF position.

WARNING

- **If the READY to drive indicator light is OFF while driving, the power assist for the steering will not work. Steering will be harder to operate.**
- **When the electric power steering warning light illuminates while the READY to drive indicator light is ON, the power assist for the steering will be limited or cease operation. You will still have control of the vehicle but the steering will be harder to operate.**

The electric power steering is designed to provide power assist while driving to operate the steering wheel with light force.

When SPORT mode is selected, the steering wheel effort is moderately increased for a sporty feel. (See "SPORT mode" (P.358).)

When the steering wheel is operated repeatedly or continuously while parking or driving at a very low speed, the power assist for the steering wheel will be reduced. This is to prevent overheating of the electric power steering and protect it from getting damaged. While the power assist is reduced, steering wheel operation will become heavy. If the steering wheel operation is still performed, the electric power steering may stop and the electric power steering warning light ⊛! will illuminate. In a safe location, stop the EV system and place the power switch in the OFF position. When the temperature of the electric power steering goes down, the power assist level will return to normal. Avoid repeating such steering wheel operations that could cause the electric power steering to overheat.

You may hear a noise when the steering wheel is operated quickly. However, this is not a malfunction.

If the electric power steering warning light illuminates while the READY to drive indicator light is ON, it may indicate the electric power steering is not functioning properly and may need servicing. Have the electric power steering checked. It is recommended that you visit a NISSAN certified LEAF dealer for this service. (See "Electric power steering warning light (red)" (P.161) and "Electric power steering warning light (yellow)" (P.164).)

When the electric power steering warning light illuminates, the power assist for the steering will be limited or cease operation, which may cause the steering wheel operation to become heavy. Even if this

occurs, the performance of the manual steering is ensured. Grip the steering wheel securely and operate it with greater force than usual.

BRAKING PRECAUTIONS

Basic information

This vehicle is equipped with two braking systems:

1. Hydraulic brake system
2. Regenerative brake system

Hydraulic brake system

The hydraulic brake system is similar to the brakes used on conventional vehicles.

The brake system has two separate hydraulic circuits. If one circuit malfunctions, you will still have braking at two wheels.

Regenerative brake system

The primary purpose of regenerative brake system is to provide some power to help recharge the Li-ion battery and extend driving range. A secondary benefit is “engine braking” that operates based on battery conditions.

In the D (Drive) position, when the accelerator is released, the regenerative brake system provides some deceleration and generates power for the Li-ion battery. Power is also generated when the brake pedal is applied.

When you select the B position (if so equipped) and take your foot off the accelerator pedal, more regenerative brake is applied than in the D (Drive) position. However, during high-speed driving you may feel that regenerative brake provides less deceleration than the engine braking in an ordinary vehicle. This is normal.

Less deceleration is provided by the regenerative brake system when the Li-ion battery is fully charged. Regenerative brake is automatically reduced when the Li-ion battery is fully charged to prevent the Li-ion battery from becoming overcharged. Regenerative brake is also automatically reduced when the battery temperature is high/low to prevent Li-ion battery damage.

The brake pedal should be used to slow or stop the vehicle depending on traffic or road conditions. The vehicle brakes are not affected by regenerative brake system operation.

NOTE:

- **When applying the regenerative brakes, you may hear a sound coming from the regenerative brake system. This is a normal operating characteristic of an EV (Electric vehicle).**

- **If the power switch position is in a position other than ON or READY to drive, you can stop the vehicle by depressing the brake pedal. However, greater foot pressure on the brake pedal will be required to stop the vehicle, and the stopping distance will be longer.**
- **When depressing the brake pedal, the braking pedal feel will not be smooth or may change when the cooperative regenerative brake system activates. However, the electronically controlled brake system is operating normally and this does not indicate a malfunction.**

Using the brakes

Avoid resting your foot on the brake pedal while driving. This will cause overheating of the brakes, wearing out the brake pads faster and will reduce driving range.

To help reduce brake wear and to prevent the brakes from overheating, reduce speed and select the B position (if so equipped) or increase the regenerative braking intensity using the paddle selector (if so equipped) before going down a slope or long grade. Overheated brakes may reduce braking performance and could result in loss of vehicle control.

WARNING

- **While driving on a slippery surface, be careful when braking or accelerating. Abrupt braking or accelerating could cause the wheels to skid, which could result in an accident.**
- **If the brake pedal is depressed with the EV (Electric Vehicle) system OFF, you may feel an increased brake pedal effort and a decreased pedal stroke. If the brake warning light (red) does not illuminate and the brake pedal feels like it has returned to its normal state after the EV system is started, this indicates that there is no malfunction and the vehicle can be operated normally.**

Wet brakes

When the vehicle is washed or driven through water, the brakes may get wet. As a result, your braking distance will be longer and the vehicle may pull to one side during braking.

To dry brakes, drive the vehicle at a safe speed while lightly tapping the brake pedal to heat-up the brakes. Do this until the brakes return to normal. Avoid driving the vehicle at high speeds until the brakes function correctly.

BRAKE ASSIST

When the force applied to the brake pedal exceeds a certain level, the Brake Assist is activated generating greater braking force than a conventional brake booster even with light pedal force.

WARNING

The Brake Assist is only an aid to assist braking operation and is not a collision warning or avoidance device. It is the driver's responsibility to stay alert, drive safely and be in control of the vehicle at all times.

ANTI-LOCK BRAKING SYSTEM (ABS)

Basic information

WARNING

- **The Anti-lock Braking System (ABS) is a sophisticated device, but it cannot prevent accidents resulting from careless or dangerous driving techniques. It can help maintain vehicle control during braking on slippery surfaces. Remember that stopping distances on slippery surfaces will be longer than on normal surfaces even with ABS. Stopping distances may also be longer on rough, gravel or snow covered roads, or if you are using tire chains. Always maintain a safe distance from the vehicle in front of you. Ultimately, the driver is responsible for safety.**
- **Tire type and condition may also affect braking effectiveness.**
  - **When replacing tires, install the specified size of tires on all four wheels.**
  - **For detailed information, see "Wheels and tires" (P.529) .**

The Anti-lock Braking System (ABS) controls the brakes so the wheels do not lock during hard braking or when braking on slippery surfaces. The system detects the rotation speed at each wheel and varies the brake fluid pressure to prevent each wheel from locking and sliding. By preventing each wheel from locking, the system helps the driver maintain steering control and helps to minimize swerving and spinning on slippery surfaces.

Using the system

Depress the brake pedal and hold it down. Depress the brake pedal with firm steady pressure, but do not pump the brakes. The ABS will operate to prevent the wheels from locking up. Steer the vehicle to avoid obstacles.

WARNING

Do not pump the brake pedal. Doing so may result in increased stopping distances.

Self-test feature

The ABS includes electronic sensors, electric pumps, hydraulic solenoids and a computer. The computer has a built-in diagnostic feature that tests the system

each time you push the power switch in the READY to drive position and move the vehicle at a low speed in forward or reverse. When the self-test occurs, you may hear a “clunk” noise and/or feel a pulsation in the brake pedal. This is normal and does not indicate a malfunction. If the computer senses a malfunction, it switches the ABS off and illuminates the ABS warning light on the instrument panel. The brake system then operates normally, but without anti-lock assistance.

If the ABS warning light illuminates during the self-test or while driving, have the vehicle checked. It is recommended you visit a NISSAN certified LEAF dealer for this service.

Normal operation

The ABS operates at speeds above 3 to 6 MPH (5 to 10 km/h). The speed varies according to road conditions.

When the ABS senses that one or more wheels are close to locking up, the actuator rapidly applies and releases hydraulic pressure. This action is similar to pumping the brakes very quickly. You may feel a pulsation in the brake pedal and hear a noise from under the hood or feel a vibration from the actuator when it is operating. This is normal and indicates that the ABS is operating properly. However, the pulsation may indicate that road conditions are hazardous and extra care is required while driving.

SECONDARY COLLISION MITIGATION BRAKING (SCMB)

Basic information

WARNING

- **Never rely solely on the SCMB system. The system is designed to help mitigate the possible damage due to the secondary collision, and is not effective in all situations. It is the driver’s responsibility to stay alert, drive safely, and be in control of the vehicle at all times.**
- **SCMB system will not activate if the Vehicle Dynamics Control (VDC) system is damaged during the accident.**
- **System will automatically turn off after a set duration, following the initiation of the function.**

Secondary Collision Mitigation Braking (SCMB) system controls the brake automatically in the event of an accident where the supplemental air bag system detected a collision. This feature is designed to mitigate the risk of a subsequent collision.

System operation

SCMB starts to operate when the supplemental air bag system is deployed. The system applies brake to slow down the vehicle and bring it to a standstill.

The system stops operating when the vehicle is stationary.

SCMB is overridden in the following situations:

- When the accelerator pedal is depressed over a specified threshold.
- When the brake pedal is depressed over a specified threshold (where the driver demands greater braking force).

If a malfunction occurs in the system, a message will be displayed in the vehicle information display. See "Secondary Collision Mitigation Braking malfunction warning" (P.192).

VEHICLE DYNAMIC CONTROL (VDC) SYSTEM

BASIC INFORMATION

The Vehicle Dynamic Control (VDC) system uses various sensors to monitor driver inputs and vehicle motion. Under certain driving conditions, the VDC system helps to perform the following functions.

- Controls brake pressure to reduce wheel slip on one slipping drive wheel so power is transferred to a non slipping drive wheel on the same axle.
- Controls brake pressure and EV system output to reduce drive wheel slip based on vehicle speed (traction control function).
- Controls brake pressure at individual wheels and EV system output to help the driver maintain control of the vehicle in the following conditions:
  - understeer (vehicle tends to not follow the steered path despite increased steering input)
  - oversteer (vehicle tends to spin due to certain road or driving conditions).

The VDC system can help the driver to maintain control of the vehicle, but it cannot prevent loss of vehicle control in all driving situations.

When the VDC system operates, the slip indicator light in the instrument panel flashes so note the following:

- The road may be slippery or the system may determine some action is required to help keep the vehicle on the steered path.
- You may feel a pulsation in the brake pedal and hear a noise or vibration from under the hood. This is normal and indicates that the VDC system is working properly.
- Adjust your speed and driving to the road conditions.

If a malfunction occurs in the system, the slip indicator light illuminates in the instrument panel. The VDC system automatically turns off.

The vehicle information display is used to turn off the VDC system. The VDC off indicator illuminates to indicate the VDC system is off. When the VDC system is turned off, the VDC system still operates to prevent one drive wheel from slipping by transferring power to a non slipping drive wheel. The slip indicator light flashes if this occurs. All other VDC functions are off, and the slip indicator light will not flash. The VDC system is automatically reset to on when the power switch is placed in the off position then back to the on position.

See "Slip indicator light" (P.168) and "Vehicle Dynamic Control (VDC) off indicator light" (P.168).

The computer has a built-in diagnostic feature that tests the system each time you start the EV system and move the vehicle forward or in reverse at a slow speed. When the self-test occurs, you may hear a "clunk" noise and/or feel a pulsation in the brake pedal. This is normal and is not an indication of a malfunction.

WARNING

- **The VDC system is designed to help improve driving stability but does not prevent accidents due to abrupt steering operation at high speeds or by careless or dangerous driving techniques. Reduce vehicle speed and be especially careful when driving and cornering on slippery surfaces and always drive carefully.**

- **Do not modify the vehicle's suspension. If suspension parts such as shock absorbers, struts, springs, stabilizer bars, bushings and wheels are not NISSAN recommended for your vehicle or are extremely deteriorated, the VDC system may not operate properly. This could adversely affect vehicle handling performance, and the slip indicator light may illuminate.**
- **If brake related parts such as brake pads, rotors and calipers are not NISSAN recommended or are extremely deteriorated, the VDC system may not operate properly and the slip indicator light may illuminate.**
- **If EV system control related parts are not NISSAN recommended or are extremely deteriorated, the slip indicator light may illuminate.**
- **When driving on extremely inclined surfaces such as higher banked corners, the VDC system may not operate properly and the slip indicator light may illuminate. Do not drive on these types of roads.**
- **When driving on an unstable surface such as a turntable, ferry, elevator or ramp, the slip indicator light may illuminate. This is not a malfunction. Restart the EV system after driving onto a stable surface.**
- **If wheels or tires other than the NISSAN recommended ones are used, the VDC system may not operate properly and the slip indicator light may illuminate.**
- **The VDC system is not a substitute for winter tires or tire chains on a snow covered road.**

HOW TO TURN OFF THE VDC SYSTEM

The vehicle should be driven with the Vehicle Dynamic Control (VDC) system ON for most driving conditions.

When the vehicle is stuck in mud or snow, the VDC system reduces the EV system output to reduce wheel spin. The EV system speed will be reduced even if the accelerator is depressed to the floor. If maximum EV system power is needed to free a stuck vehicle, turn the VDC system off.

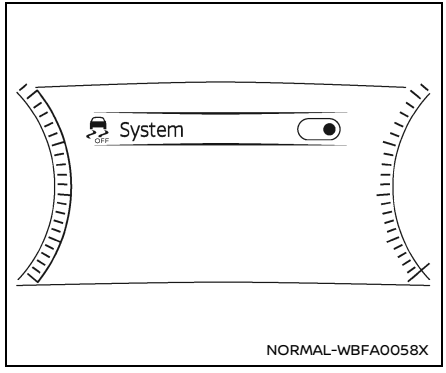

Example

To turn off the VDC system, perform the following steps in the vehicle information display.

1. Push the ◀ ▶ button on the steering wheel until "Settings" appears and then push the scroll dial.
2. Use the scroll dial to select "VDC Setting" and then push it.
3. Select "System" and push the scroll dial. The OFF indicator light will illuminate.

Turn "VDC Setting" back on in the vehicle information display or restart the EV system to turn on the VDC system.

BRAKE FORCE DISTRIBUTION

During braking while driving through turns, the system optimizes the distribution of force to each of the four wheels depending on the radius of the turn.

WARNING

- **The VDC system is designed to help the driver maintain stability but does not prevent accidents due to abrupt steering operation at high speeds or by careless or dangerous driving techniques. Reduce vehicle speed and be especially careful when driving and cornering on slippery surfaces and always drive carefully.**
- **Do not modify the vehicle's suspension. If suspension parts such as shock absorbers, struts, springs, stabilizer bars, bushings and wheels are not NISSAN recommended for your vehicle or are extremely deteriorated, the VDC system may not operate properly. This could adversely affect vehicle handling performance, and the indicator light may flash or both the and OFF indicator lights may illuminate.**
- **If brake related parts such as brake pads, rotors and calipers are not NISSAN recommended or are extremely deteriorated, the VDC system may not operate properly and both the and OFF indicator lights may illuminate.**
- **If EV system control related parts are not NISSAN recommended or are extremely deteriorated, both the and OFF indicator lights may illuminate.**
- **When driving on extremely inclined surfaces such as higher banked corners, the VDC system may not operate properly and the indicator light may flash or both the and OFF indicator lights may illuminate. Do not drive on these types of roads.**
- **When driving on an unstable surface such as a turntable, ferry, elevator or ramp, the indicator light may flash or both the and OFF indicator lights may illuminate. This is not a malfunction. Restart the EV system after driving onto a stable surface.**
- **If wheels or tires other than the NISSAN recommended ones are used, the VDC system may not operate properly and the indicator light may flash or both the and OFF indicator lights may illuminate.**
- **The VDC system is not a substitute for winter tires or tire chains on a snow covered road.**

HILL START ASSIST SYSTEM

WARNING

- **Never rely solely on the hill start assist system to prevent the vehicle from moving backward on a hill. Always drive carefully and attentively. Depress the brake pedal when the vehicle is stopped on a steep hill. Be especially careful when stopped on a hill on frozen or muddy roads. Failure to prevent the vehicle from rolling backwards may result in a loss of control of the vehicle and possible serious injury or death.**
- **The hill start assist system is not designed to hold the vehicle at a standstill on a hill. Depress the brake pedal when the vehicle is stopped on a steep hill. Failure to do so may cause the vehicle to roll backwards and may result in a collision or serious personal injury.**
- **The hill start assist system may not prevent the vehicle from rolling backwards on a hill under all load or road conditions. Always be prepared to depress the brake pedal to prevent the vehicle from rolling backwards. Failure to do so may result in a collision or serious personal injury.**

The hill start assist system automatically keeps the brakes applied to help prevent the vehicle from rolling backwards in the time it takes the driver to release the brake pedal and apply the accelerator when the vehicle is stopped on a hill.

The hill start assist system will operate automatically under the following conditions:

- The vehicle shift is in a forward or reverse position.
- The vehicle is stopped completely on a hill by applying the brake.

The maximum holding time is 2 seconds. After 2 seconds the vehicle will begin to roll back and the hill start assist system will stop operating completely.

The hill start assist system will not operate when the N (Neutral) or P (Park) position is selected or on a flat and level road.

When the slip indicator light illuminates in the meter, the hill start assist system will not operate. (See "Slip indicator light" (P.168).)

FRONT AND REAR SONAR SYSTEM (if so equipped)

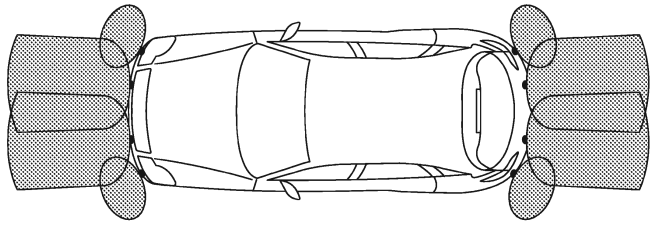

BASIC INFORMATION

The sonar system sounds a tone to inform the driver of obstacles near the bumper.

When the sonar system is turned on, the sonar view will automatically appear in the vehicle information display and in the center display.

WARNING

- **The sonar system is a convenience but it is not a substitute for proper parking.**
- **The driver is always responsible for safety during parking and other maneuvers. Always look around and check that it is safe to do so before parking.**
  - **If there is any doubt the surroundings in the path of the parking area and/or the parking area itself are not free from obstacles, immediately stop the vehicle and check the surroundings.**
  - **The sonar system is intended as an aid to parking, to be used in conjunction with the inside and outside mirrors.**
- **Read and understand the limitations of the sonar system as contained in this section. The colors of the sonar indicator indicates different distances to the object.**
- **Inclement weather or ultrasonic sources such as an automatic car wash, a truck's compressed-air brakes or a pneumatic drill may affect the function of the system; this may include reduced performance or a false activation.**
- **The sonar system is designed as an aid to the driver in detecting large stationary objects to help avoid damaging the vehicle.**
- **The sonar system is not designed to prevent contact with small or moving objects. Always move slowly. The system will not detect small objects below the bumper, and may not detect objects close to the bumper or on the ground.**

- **The sonar system may not detect the following objects: fluffy objects such as snow, cloth, cotton, glass-wool, etc.; thin objects such as rope, wire and chain, etc.; or wedge-shaped objects.**
- **The front and rear sonar sensors detect the distance between the vehicle and the obstacle by detecting the sound wave reflected from the surface of an obstacle. When there is a sound such as horn, or an ultrasonic source (such as sonar of other vehicles) around the vehicle, the sensor (sonar) may not detect objects properly.**
- **The sonar system may detect some types of curbstones.**

If your vehicle sustains damage to the bumper fascia, leaving it misaligned or bent, the sensing zone may be altered causing inaccurate measurement of obstacles or false alarms.

CAUTION

- **Excessive noise (such as audio system volume or an open vehicle window) will interfere with the tone and it may not be heard.**
- **Keep the sonar sensors (located on the bumper fascia) free from snow, ice and large accumulations of dirt. Do not clean the sonar sensors with sharp objects. If the sensors are covered, the accuracy of the sonar function will be diminished.**

SYSTEM OPERATION

The system informs with a visual and audible signal of front obstacles when the shift button is in the "D" (Drive) position and both front and rear obstacles when the shift button is in the "R" (Reverse) position.

The system is deactivated at speeds above 6 MPH (10 km/h). It is reactivated at lower speeds.

The intermittent tone will stop after 3 seconds when an obstacle is detected by only the corner sensor and the distance does not change. The tone will stop when the obstacle get away from the vehicle.

When the object is detected, the indicator (green) appears and blinks and the tone sounds intermittently. When the vehicle moves closer to the object, the color of the indicator turns yellow and the rate of the blinking increases. When the vehicle is very close to the object, the indicator stops blinking and turns red, and the tone sounds continuously.

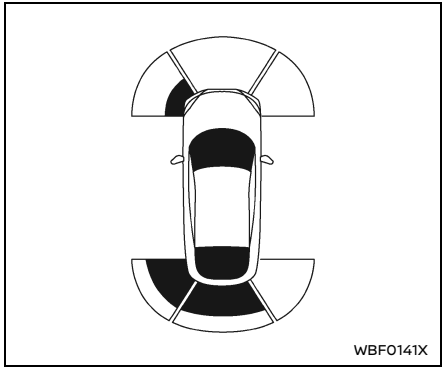

When the vehicle moves closer to an obstacle, the sonar indicator (detected area) appears in the vehicle information display.

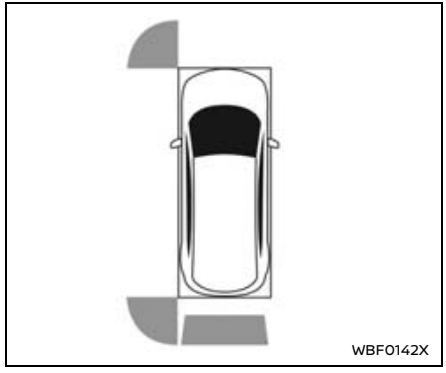

The sonar indicator also appears on the camera view of the center display.

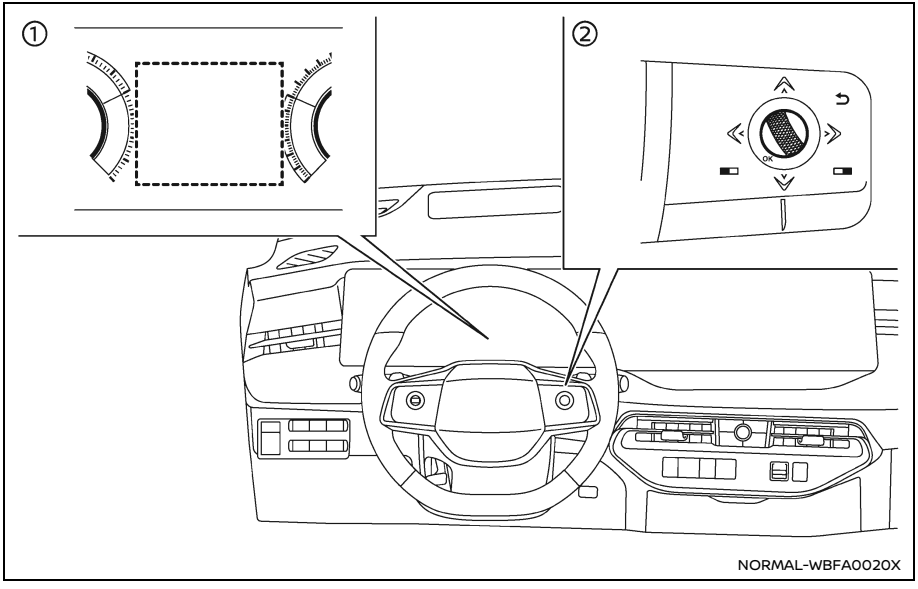

① Vehicle information display

② Steering-wheel-mounted control (right side)

HOW TO ENABLE/DISABLE THE SONAR SYSTEM

The system is automatically activated when the power switch is in the ON position and the shift button is in the D (Drive) or R (Reverse) position.

NOTE:

When the shift button is in the R (Reverse) position and the [Parking Assist] screen is displayed in the vehicle information display the sonar system can be disabled temporarily by pushing the scroll dial on the steering wheel.

Perform the following steps to set up the sonar system function.

1. Push the ◀ ▶ button until "Settings" appears in the vehicle information display and then push the scroll dial. Use the scroll dial to select "Driver Assistance." Then push the scroll dial.
2. Select "Parking Assist" and push the scroll dial.
3. Use the scroll dial to navigate in the menu and select or change an item:
   - Rear Auto Braking
     — Turns ON/OFF the Rear Auto Braking. (See "Rear Automatic Braking (RAB)" (P.453).)
   - Rear Cross Traffic Alert
     — Turns ON/OFF the Rear Cross Traffic Alert. (See "Rear Cross Traffic Alert (RCTA)" (P.402).)
   - Moving Object
     — Turns ON/OFF the Moving Object Detection (MOD). (See "Moving Object Detection (MOD)" (P.313).)
   - Front Sonar
     — Turns ON/OFF the front sonar sensors

- Rear Sonar
  — Turns ON/OFF the rear sonar sensors

NOTE:

Disabling Rear Sonar will not automatically disable Rear Automatic Braking (RAB). To activate/deactive RAB, see "How to enable/disable the RAB system" (P.455).

- Sonar Distance
  — Changes the sonar sensor's detection distance to “Long”, “Medium” or “Short”
- Auto Show Sonar
  — Shows the sonar display in the vehicle information display when the sonar activates
- Sonar Volume
  — Changes the volume of the tone sound to “High”, “Medium” or “Low”

SONAR SYSTEM LIMITATIONS

WARNING

Listed below are the system limitations for the sonar system. Failure to operate the vehicle in accordance with these system limitations could result in serious injury or death.

- **Read and understand the limitations of the sonar system as contained in this section. Inclement weather may affect the function of the sonar system; this may include reduced performance or a false activation.**
- **The sonar system is deactivated at speeds above 6 MPH (10 km/h). It is reactivated at lower speeds.**
- **Inclement weather or ultrasonic sources such as an automatic car wash, a truck’s compressed-air brakes or a pneumatic drill may affect the function of the sonar system; this may include reduced performance or a false activation.**
- **The sonar system is not designed to prevent contact with small or moving objects. Always move slowly. The system will not detect small objects below the bumper or on the ground.**
- **The sonar system may not detect the following objects: fluffy objects such as snow, cloth, cotton, glass-wool, etc.; thin objects such as rope, wire and chain, etc.; or wedge-shaped objects; complex-shaped objects or multiple objects in close.**
- **The sonar system may not detect objects at speed above 3 MPH (5 km/h) and may not detect certain angular or moving objects.**
- **The sonar system may not detect the following objects:**
  - **Pedestrians who approach the vehicle from the side**
  - **Objects placed next to the vehicle**
- **The sonar system may not operate in the following conditions:**
  - **When rain, snow, ice, dirt, etc. adheres to the sonar sensors.**
  - **When a loud sound is heard in the area around the vehicle.**
  - **When the surface of the obstacle is diagonal to the front or rear of the vehicle.**
  - **When a sonar system or the area around the sensor is extremely hot or cold.**
- **The sonar system may unintentionally operate in the following conditions:**
  - **When there is overgrown grass in the area around the vehicle.**

- **When there is a structure (for example, a wall, a toll gate equipment, a narrow tunnel or a parking lot gate) near the side of the vehicle.**
- **When there are bumps, protrusions or manhole covers on the road surface.**
- **When the vehicle drives through a draped flag or a curtain.**
- **When there is an accumulation of snow or ice behind the vehicle.**
- **When driving on a steep hill.**

SYSTEM TEMPORARILY UNAVAILABLE

When sonar blockage is detected, the system will be deactivated automatically.

The system is not available until the conditions no longer exist.

The sonar sensors may be blocked by temporary ambient conditions such as splashing water, mist or fog. The blocked condition may also be caused by objects such as ice, frost or dirt obstructing the sonar sensors.

Action to take:

When the above conditions no longer exist, the system will resume automatically.

See "Driver assistance troubleshooting guide" (P.362).

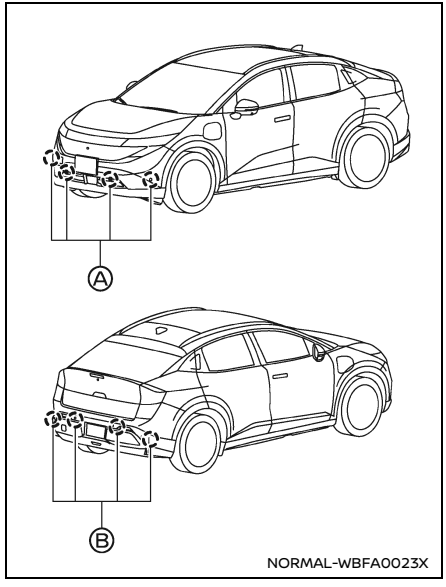

SYSTEM MAINTENANCE

The sonar sensors Ⓐ and Ⓑ are located on the front and rear bumpers.

- Always keep the area near the sonar sensors clean.

- If the sonar sensors are dirty, wipe them off with a soft cloth while being careful to not damage them.
- The sonar sensors may be blocked by temporary ambient conditions such as splashing water, mist or fog. The blocked condition may also be caused by objects such as ice, frost or dirt obstructing the sonar sensors. Check for and remove objects obstructing the area around the sonar sensors.
- Do not subject the area around the sonar sensors to strong impact. Also, do not remove or disassemble the sonar sensors. If the sonar sensors and peripheral areas are deformed in an accident, etc., have the sonar sensors checked. It is recommended that you visit a NISSAN certified LEAF dealer for this service.
- Do not attach stickers (including transparent material), install accessories or apply additional paint on the sonar sensors and their surrounding areas. This may cause a malfunction or improper operation.
- When washing the vehicle using a high-pressure washer, do not apply direct washer pressure on the sonar sensors. This may cause a malfunction of the sonar sensors.

REAR SONAR SYSTEM (RSS) (if so equipped)

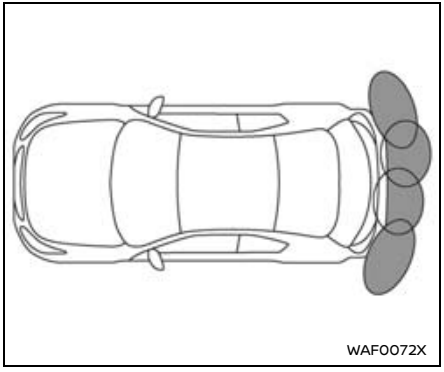

BASIC INFORMATION

The RSS sounds a tone to inform the driver of obstacles near the rear bumper.

When the RSS is turned on, the sonar view will automatically appear in the vehicle information display.

WARNING

- **The RSS is a convenience but it is not a substitute for proper parking.**
- **The driver is always responsible for safety during parking and other maneuvers. Always look around and check that it is safe to do so before parking.**
- **Read and understand the limitations of the RSS as contained in this section. The colors of the sonar indicator indicates different distances to the object.**
- **Inclement weather or ultrasonic sources such as an automatic car wash, a truck's compressed-air brakes or a pneumatic drill may affect the function of the system; this may include reduced performance or a false activation.**
- **The RSS is designed as an aid to the driver in detecting large stationary objects to help avoid damaging the vehicle.**
- **The RSS is not designed to prevent contact with small or moving objects. Always move slowly. The system will not detect small objects below the bumper, and may not detect objects close to the bumper or on the ground.**

- **The RSS may not detect the following objects: fluffy objects such as snow, cloth, cotton, glass-wool, etc.; thin objects such as rope, wire and chain, etc.; or wedge-shaped objects.**

If your vehicle sustains damage to the bumper fascia, leaving it misaligned or bent, the sensing zone may be altered causing inaccurate measurement of obstacles or false alarms.

CAUTION

- **Excessive noise (such as audio system volume or an open vehicle window) will interfere with the tone and it may not be heard.**
- **Keep the sonar sensors (located on the rear bumper fascia) free from snow, ice and large accumulations of dirt. Do not clean the sensors with sharp objects. If the sensors are covered, the accuracy of the sonar function will be diminished.**

SYSTEM OPERATION

The system informs with a visual and audible alert of rear obstacles when the shift button is in the R (Reverse) position.

The system is deactivated at speeds above 6 MPH (10 km/h). It is reactivated at lower speeds.

The intermittent tone will stop after several seconds when an obstacle is identified only with the corner sensor. The tone will stop when the obstacle gets away from the vehicle.

When the object is detected, the indicator (green) appears and blinks and the tone sounds intermittently. When the vehicle moves closer to the object, the color of the indicator turns yellow and the rate of the blinking increases. When the vehicle is very close to the object, the indicator stops blinking and turns red, and the tone sounds continuously.

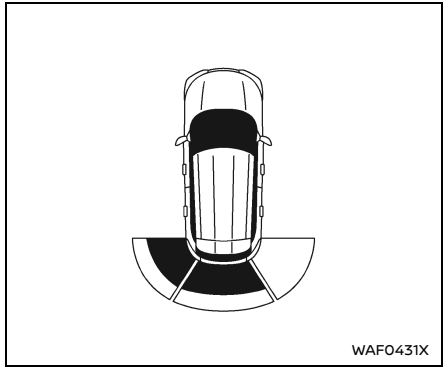

Example

When the rear of the vehicle moves closer to an obstacle, the sonar indicator appears in the vehicle information display.

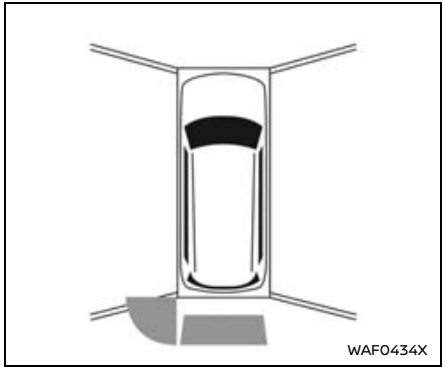

Example

The sonar indicator also appears on the camera view of the center display.

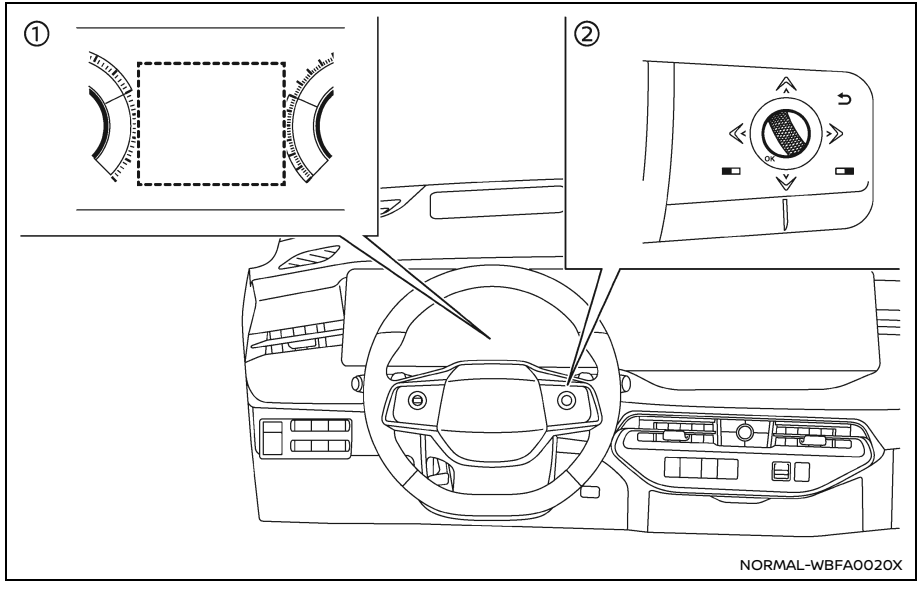

① Vehicle information display

② Steering-wheel-mounted control (right side)

HOW TO ENABLE/DISABLE THE RSS

The system is automatically activated when the power switch is in the ON position and the shift button is in the R (Reverse) position.

Perform the following steps to set up the RSS function:

1. Push the ◀ ▶ button until "Settings" appears in the vehicle information display and then push the scroll dial.

Use the scroll dial to select “Driver Assistance.” Then push the scroll dial.

2. Select “Parking Assist” and push the scroll dial.
3. Use the scroll dial to navigate in the menu and select or change an item:
   - Rear Auto Braking
     — Turns ON/OFF the Rear Auto Braking (See "Rear Automatic Braking (RAB)" (P.453).)
   - Rear Cross Traffic Alert
     — Turns ON/OFF the Rear Cross Traffic Alert (See "Rear Cross Traffic Alert (RCTA)" (P.402).)
   - Moving Object
     — Turns ON/OFF the Moving Object Detection (MOD) (See "Moving Object Detection (MOD)" (P.313).)
   - Rear Sonar
     — Turns ON/OFF the RSS
   - Sonar Distance
     — Changes the RSS sensor’s detection distance to “Long”, “Medium” or “Short”
   - Auto Show Sonar
     — Shows the sonar display in the vehicle information display when the RSS activates
   - Sonar Volume
     — Changes the volume of the tone sound to “High”, “Medium” or “Low”

RSS LIMITATIONS

WARNING

Listed below are the system limitations for the RSS. Failure to operate the vehicle in accordance with these system limitations could result in serious injury or death.

- **Read and understand the limitations of the RSS as contained in this section. Inclement weather may affect the function of the RSS; this may include reduced performance or a false activation.**
- **The system is deactivated at speeds above 6 MPH (10 km/h). It is reactivated at lower speeds.**
- **Inclement weather or ultrasonic sources such as an automatic car wash, a truck’s compressed-air brakes or a pneumatic drill may affect the function of the RSS; this may include reduced performance or a false activation.**
- **The RSS is not designed to prevent contact with small or moving objects. Always move slowly. The system will not detect small objects below the bumper or on the ground.**
- **The RSS may not detect the following objects: fluffy objects such as snow, cloth, cotton, glass-wool, etc.; thin objects such as rope, wire and chain, etc.; or wedge-shaped objects; complex-shaped objects or multiple objects in close.**
- **The RSS may not detect objects at speed above 3 MPH (5 km/h) and may not detect certain angular or moving objects.**
- **The RSS may not detect pedestrians including small children and animals.**
- **The RSS may not operate in the following conditions:**
  - **When rain, snow, ice, dirt, etc. adheres to the sonar sensor.**
  - **When a loud sound is heard in the area around the vehicle.**
  - **When the surface of the obstacle is diagonal to the rear of the vehicle.**
  - **When a sonar sensor or the area around the sensor is extremely hot or cold.**
- **The RSS may unintentionally operate in the following conditions:**

- **When there is overgrown grass in the area around the vehicle.**
- **When there are bumps, protrusions or manhole covers on the road surface.**
- **When the vehicle drives through a draped flag or a curtain.**
- **When there is an accumulation of snow or ice behind the vehicle.**
- **When driving on a steep hill.**

SYSTEM TEMPORARILY UNAVAILABLE

When sonar blockage is detected, the system will be deactivated automatically.

The system is not available until the conditions no longer exist.

The sonar sensors may be blocked by temporary ambient conditions such as splashing water, mist or fog. The blocked condition may also be caused by objects such as ice, frost or dirt obstructing the sonar sensors.

Action to take:

When the above conditions no longer exist, the system will resume automatically.

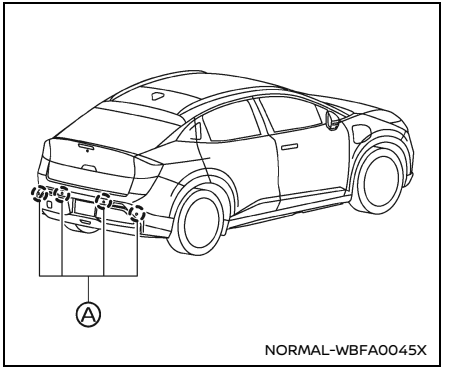

NORMAL-WBFA0045X

SYSTEM MAINTENANCE

The sonar sensors Ⓐ are located on the rear bumper.

- Always keep the area near the sonar sensors clean.
- If the sonar sensors are dirty, wipe them off with a soft cloth while being careful to not damage them.
- The sonar sensors may be blocked by temporary ambient conditions such as splashing water, mist or fog. The blocked condition may also be caused by objects such as ice, frost or dirt obstructing the sonar sensors. Check for and remove objects obstructing the area around the sonar sensors.
- Do not subject the area around the sonar sensors to strong impact. Also, do not remove or disassemble the sonar sensors. If the sonar sensors and peripheral areas are deformed in an accident, etc., have the sonar sensors checked. It is recommended that you visit a NISSAN certified LEAF dealer for this service.
- Do not attach stickers (including transparent material), install accessories or apply additional paint on the sonar sensors and their surrounding areas. This may cause a malfunction or improper operation.
- When washing the vehicle using a high-pressure washer, do not apply direct washer pressure on the sonar sensors. This may cause a malfunction of the sonar sensors.

BASIC INFORMATION

WARNING

- **Whatever the condition, drive with caution. Accelerate and decelerate with great care. If accelerating or decelerating too fast, the drive wheels will lose even more traction.**
- **Allow more stopping distance in cold weather driving. Braking should be started sooner than on dry pavement.**
- **Keep at a greater distance from the vehicle in front of you on slippery roads.**
- **Wet ice (32°F, 0°C and freezing rain), very cold snow and ice can be slick and very difficult to drive on. The vehicle will have a lot less traction or grip under these conditions. Try to avoid driving on wet ice until the road is salted or sanded.**
- **Watch for slippery spots (glaring ice). These may appear on an otherwise clear road in shaded areas. If a patch of ice is seen ahead, brake before reaching it. Try not to brake while actually on the ice, and avoid any sudden steering maneuvers.**
- **Do not use cruise control on slippery roads.**

CAUTION

To prevent damage to the Li-ion battery: Do not store a vehicle in temperatures below -13°F (-25°C) for over seven days. If the outside temperature is -13°F (-25°C) or less, the Li-ion battery may freeze and it cannot be charged or provide power to drive the vehicle. Move the vehicle to a warm location.

NOTE:

- **Driving range may be substantially reduced in extremely cold conditions (for example under -4°F (-20°C)).**
- **Using the climate control system to heat the cabin when outside temperature is below 32°F (0°C) uses more electricity and affects driving range more than when using the heater when the temperature is above 32°F (0°C).**
- **The Li-ion battery requires more time to charge when the Li-ion battery temperature control system (if so equipped) operates.**
- **The Climate Schedule does not turn on while the Li-ion battery temperature control system (if so equipped) operates.**
- **Set only the charge schedule [End Time] when charging in cold weather. The vehicle automatically determines when to start charging, to fully charge the Li-ion battery, whether or not the Li-ion battery temperature control system (if so equipped) operates.**

12-VOLT BATTERY

If the 12-volt battery is not fully charged during extremely cold weather conditions, the 12-volt battery fluid may freeze and damage the 12-volt battery. To maintain maximum efficiency, the 12-volt battery should be checked regularly. For additional information, see "12-volt battery" (P.523).

COOLANT

If the vehicle is to be left outside without

anti-freeze, drain the cooling system. Refill before operating the vehicle. For details, see "Cooling system" (P.516).

TIRE EQUIPMENT

Basic information

SUMMER tires have a tread designed to provide superior performance on dry pavement. However, the performance of these tires will be substantially reduced in snowy and icy conditions. If you operate your vehicle on snowy or icy roads, NISSAN recommends the use of MUD & SNOW or ALL SEASON tires on all four wheels. It is recommended you consult a NISSAN certified LEAF dealer for the tire type, size, speed rating and availability information.

For additional traction on icy roads, studded tires may be used. However, some U.S. states and Canadian provinces prohibit their use. Check local, state and provincial laws before installing studded tires.

Skid and traction capabilities of studded snow tires, on wet or dry surfaces, may be poorer than that of non-studded snow tires.

Tire chains may be used. For details, see "Tire chains" (P.537) .

SPECIAL WINTER EQUIPMENT

It is recommended that the following items be carried in the vehicle during the winter:

- A scraper and stiff-bristled brush to remove ice and snow from the windows.
- A sturdy, flat board to be placed under the jack to give it firm support.
- A shovel to dig the vehicle out of snowdrifts.

PARKING BRAKE

When parking in the area where the outside temperature is below 32°F (0°C), do not apply the parking brake to prevent it from freezing. For safe parking:

- Push the P (Park) button to place the vehicle in the P (Park) position.
- Securely block the wheels.

CORROSION PROTECTION

Chemicals used for road surface deicing are extremely corrosive and will accelerate corrosion and the deterioration of underbody components such as the brake lines, brake cables, floor pan and fenders.

In the winter, the underbody must be cleaned periodically. For additional information, see "Corrosion protection" (P.512).

For additional protection against rust and corrosion, which may be required in some areas, it is recommended that you consult a NISSAN certified LEAF dealer.

FREEING A FROZEN CHARGE PORT LID

When the charge port is frozen, melt the ice.

6 In case of emergency

Hazard warning flasher switch 484
Connection to Roadside Assistance 484
Emergency EV system shut off 485
Flat tire 485
Tire Pressure Monitoring System (TPMS) 485
Repairing flat tire 486
Jacking up vehicle and replacing tires 492
Jump starting 497
If the Li-ion battery becomes completely discharged 500
Push starting 501
Towing your vehicle 501
Basic information 501
Towing Recommended by NISSAN 502
Vehicle recovery (freeing a stuck vehicle) 503

HAZARD WARNING FLASHER SWITCH

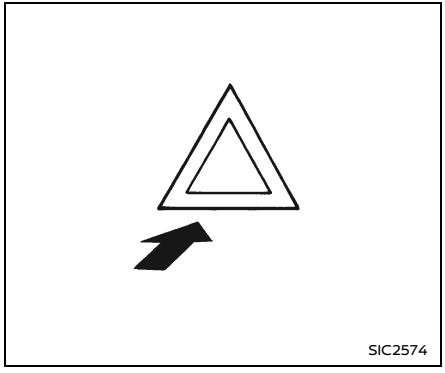

The hazard indicator flasher switch operates regardless of the power switch position except when the battery is discharged.

The hazard indicator flasher is used to warn other drivers when you have to stop or park under emergency conditions.

When the hazard indicator flasher switch is pushed, all turn signal lights will flash. To turn off the hazard indicator flasher, push the hazard indicator flasher switch again.

When an impact that could activate the supplemental air bags is detected, the hazard warning flasher lights blink automatically. If the hazard warning flasher switch is pushed, the hazard warning flashers will turn off.

WARNING

- **If stopping for an emergency, be sure to move the vehicle well off the road.**
- **Do not use the hazard warning flashers while moving on the highway unless unusual circumstances force you to drive so slowly that your vehicle might become a hazard to other traffic.**
- **Turn signals do not work when the hazard warning flasher lights are on.**

WARNING

Do not turn the hazard warning flasher switch to off until you can make sure that it is safe to do so. Also, the hazard flasher warning may not blink automatically depending on the force of impact.

CONNECTION TO ROADSIDE ASSISTANCE

In the event of a roadside emergency, Roadside Assistance Service is available to you. Please refer to your Warranty Information Booklet (U.S.) or Warranty & Roadside Assistance Information Booklet (Canada) for details.

EMERGENCY EV SYSTEM SHUT OFF

To shut off the EV system in an emergency situation while driving, perform the following procedure:

- Rapidly push the push-button power switch 3 consecutive times in less than 1.5 seconds, or
- Push and hold the push-button power switch for more than 2 seconds.

FLAT TIRE

TIRE PRESSURE MONITORING SYSTEM (TPMS)

This vehicle is equipped with the Tire Pressure Monitoring System (TPMS). It monitors tire pressure of all tires. When the low tire pressure warning light is lit, and the "Tire Pressure Low - Add Air" warning message is displayed in the vehicle information display, one or more of your tires is significantly under-inflated. If the vehicle is being driven with low tire pressure, the TPMS will activate and warn you of it by the low tire pressure warning light. This system will activate only when the vehicle is driven at speeds above 16 MPH (25 km/h). For more details, see "Warning lights, indicator lights and audible reminders" (P.159) and "Tire Pressure Monitoring System (TPMS)" (P.333).

WARNING

- **Radio waves could adversely affect electric medical equipment. Those who use a pacemaker should contact the electric medical equipment manufacturer for the possible influences before use.**
- **If the low tire pressure warning light illuminates while driving, avoid sudden steering maneuvers or abrupt braking, reduce vehicle speed, pull off the road to a safe location and stop the vehicle as soon as possible. Driving with under-inflated tires may permanently damage the tires and increase the likelihood of tire failure. Serious vehicle damage could occur and may lead to an accident and could result in serious personal injury. Check the tire pressure for all four tires. Adjust the tire pressure to the recommended COLD tire pressure shown on the Tire and Loading Information label to turn the low tire pressure warning light OFF. If the light still illuminates while driving after adjusting the tire pressure, a tire may be flat. If you have a flat tire, repair it with an emergency tire puncture repair kit as soon as possible.**
- **Replacing tires with those not originally specified by NISSAN could affect the proper operation of the TPMS.**

- **NISSAN recommends using only Genuine NISSAN Emergency Tire Sealant provided with your vehicle. Other tire sealants may damage the valve stem seal which can cause the tire to lose air pressure. It is recommended that you visit a NISSAN certified LEAF dealer as soon as possible after using tire repair sealant.**
- **To help avoid serious personal injury or death, when checking your tire pressure, either as part of routine maintenance or because of a TPMS alert, please check the pressure in all of your tires. Driving on underinflated tires can cause tire failure and interfere with the proper operation of other vehicle systems.**

CAUTION

- **The TPMS may not function properly when the wheels are equipped with tire chains or the wheels are buried in snow.**
- **Do not place metalized film or any metal parts (antenna, etc.) on the windows. This may cause poor reception of the signals from the tire pressure sensors, and the TPMS will not function properly.**

  Some devices and transmitters may temporarily interfere with the operation of the TPMS and cause the TPMS indicator light to illuminate. Some examples are:
  - **Facilities or electric devices using similar radio frequencies are near the vehicle.**
  - **If a transmitter set to similar frequencies is being used in or near the vehicle.**
  - **If a computer (or similar equipment) or a DC/AC converter is being used in or near the vehicle.**
- **When inflating the tires and checking the tire pressure, never bend the valves.**
- **Use Genuine NISSAN valve caps that comply with the factory-fitted valve cap specifications.**
- **Do not use metal valve caps.**
- **Fit the valve caps properly. Without the valve caps the valve and tire pressure monitor sensors could be damaged.**
- **Do not damage the valves and sensors when storing the wheels or fitting different tires.**
- **Replace the TPMS sensor valve stem (including valve core and cap) and screw (if so equipped) when the tires are replaced due to wear or age. The screw (if so equipped) must be fitted correctly with a torque setting of 1.4 ± 0.1 N.m. The TPMS sensors can be used again.**

REPAIRING FLAT TIRE

Basic information

WARNING

- **After using Genuine NISSAN Emergency Tire Sealant to repair a minor tire puncture, do not drive the vehicle at speeds faster than 50 mph (80 km/h).**

- **Immediately after using the Genuine NISSAN Emergency Tire Sealant to repair a minor tire puncture, it is recommended that you visit a NISSAN certified LEAF dealer. The Genuine NISSAN Emergency Tire Sealant cannot permanently seal a punctured tire. Continuing operation of the vehicle without a permanent tire repair can lead to a crash.**
- **If you used the Genuine NISSAN Emergency Tire Sealant to repair a minor tire puncture, it is recommended that you visit a NISSAN certified LEAF dealer to replace the TPMS sensor in addition to repairing or replacing the tire.**
- **NISSAN recommends using only Genuine NISSAN Emergency Tire Sealant provided with your vehicle. Other tire sealants may damage the valve stem seal which can cause the tire to lose air pressure.**

This vehicle does not have a spare tire. The emergency tire puncture repair kit (Genuine NISSAN Emergency Tire Sealant) is supplied with the vehicle instead of a spare tire. It can be used to temporarily repair minor tire punctures.

If possible, have the vehicle towed to a facility that can repair or replace the flat tire. Using the emergency tire puncture repair kit may cause a malfunction of the tire pressure sensor and cause the low tire pressure warning light to illuminate.

CAUTION

- **To avoid the emergency tire puncture kit being damaged during storage or use:**
  - **Only use the emergency tire puncture repair kit on your vehicle. Do not use it on other vehicles.**
  - **Only use the kit to inflate the tires of your vehicle and to check the vehicle's tire pressure.**
  - **Only plug the compressor into a 12-volt DC car power point.**
  - **Keep the kit free of water and dirt.**
  - **Do not disassemble or modify the kit.**
  - **Do not drop the kit or allow hard impacts to the kit.**

- **Do not use the emergency tire puncture repair kit under the following conditions. It is recommended that you visit a NISSAN certified LEAF dealer or professional road assistance.**
  - **when the sealant has passed its expiration date (shown on the label attached to the bottle)**
  - **when the cut or the puncture is approximately 0.20 in (5 mm) or longer**
  - **when the tire sidewall is damaged**
  - **when the vehicle has been driven with extremely low tire pressure**
  - **when the tire has come off the inside or the outside of the wheel**
  - **when the tire wheel is damaged**
  - **when two or more tires are flat**

If you have a flat tire, follow the instructions below.

Stopping vehicle

⚠ WARNING

- **Make sure the parking brake is securely applied and the vehicle is placed into the P (Park) position.**
- **Never repair tires when the vehicle is on a slope, ice or slippery area. This is hazardous.**
- **Never repair tires when the oncoming traffic is close to your vehicle. Call for professional road assistance.**

1. Safely move the vehicle off the road away from traffic.
2. Turn on the hazard indicator flasher lights.
3. Park on a level surface.
4. Apply the parking brake.
5. Push the P (Park) button to engage the P (Park) position.
6. Turn off the EV system.
7. Open the hood and set up the warning triangle (if so equipped):
   - To warn other traffic.
   - To signal professional road assistance personnel that you need assistance.
8. Have all passengers get out from the vehicle and stand in a safe place, away from other traffic and clear of the vehicle.

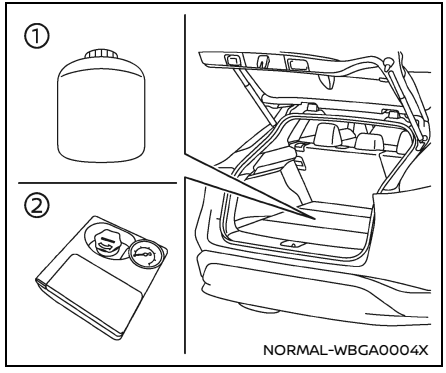

Getting emergency tire puncture repair kit

Take out the emergency tire puncture repair kit from the storage area under the luggage floor board. The repair kit consists of the following items:

① Tire sealant bottle

② Air compressor*

*: The compressor shape may differ depending on the models.

Before using emergency tire puncture repair kit

- If any foreign object (for example, a screw or nail) is embedded in the tire, do not remove it.
- Check the expiration date of the sealant (shown on the label attached to the bottle). Never use a sealant whose expiration date has passed.

Repairing tire

WARNING

Observe the following precautions when using the emergency tire puncture repair kit.

- **Swallowing the compound is dangerous. Immediately drink as much water as possible and seek prompt medical assistance.**
- **Rinse well with lots of water if the compound comes into contact with skin or eyes. If irritation persists, seek prompt medical attention.**
- **Keep the repair compound out of the reach of children.**
- **The emergency repair compound may cause a malfunction of the tire pressure sensors and cause the low tire pressure warning light to illuminate. Have the tire pressure sensor replaced as soon as possible.**

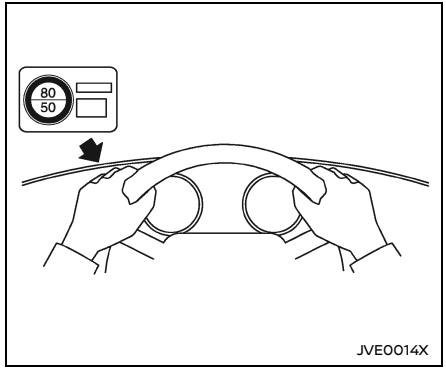

1. Take out the speed restriction sticker from the air compressor*, then put it in a location where the driver can see it while driving.

   *: The compressor shape may differ depending on the models.

CAUTION

Do not put the speed restriction label on the steering wheel pad, the speedometer or the warning light locations.

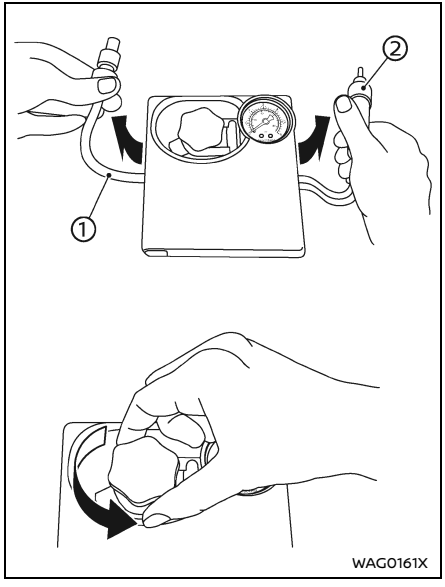

2. Take the hose ① and the power plug ② out of the air compressor. Remove the cap of the bottle holder from the air compressor.

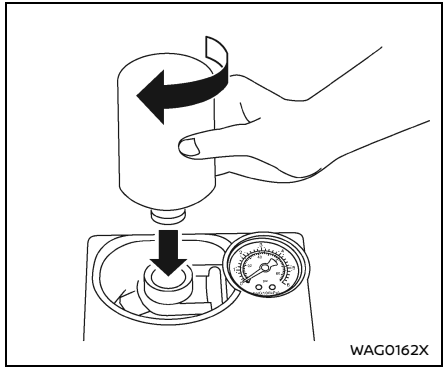

3. Remove the cap of the tire sealant bottle, and screw the bottle clockwise onto the bottle holder. (Leave the bottle seal intact. Screwing the bottle onto the bottle holder will pierce the seal of the bottle.)
4. Remove the cap of the tire valve on the flat tire.

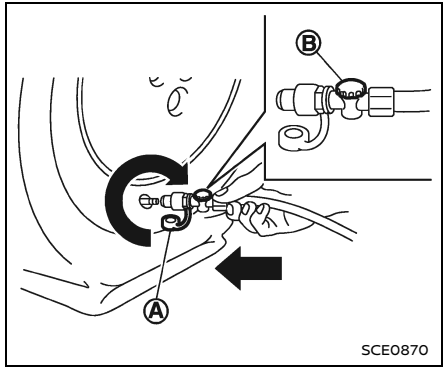

5. Remove the protective cap Ⓐ of the hose and screw the hose securely onto the tire valve. Make sure that the pressure release valve Ⓑ is securely tightened. Make sure that the air compressor switch is in the OFF (O) position, and then insert its power plug into the power outlet in the vehicle.

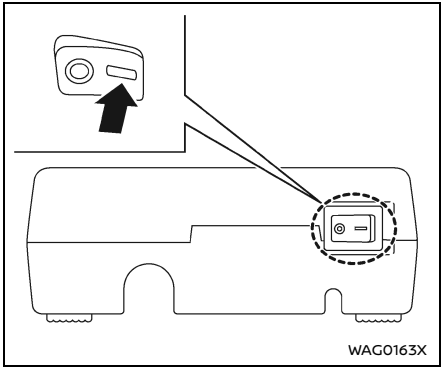

6. Place the power switch in the "ON" position. Then turn the compressor switch to the ON (–) position and inflate the tire up to the pressure that is specified on the Tire and Loading Information label affixed to the driver's side center pillar if possible, or to the minimum of 26 psi (180 kPa). Turn the air compressor off briefly in order to check the tire pressure with the pressure gauge.

   If the tire is inflated to higher than the specified pressure, adjust the tire pressure by releasing air with the pressure release valve. The cold tire pressures are shown on the Tire and Loading Information label affixed to the driver's side center pillar.

⚠ CAUTION

- **An incomplete connection between the hose and tire valve causes air leakage or sealant scatter.**
- **Do not stand directly beside the damaged tire while it is being inflated because of the risk of the rupture. If there are any cracks or bumps, turn the compressor off immediately.**
- **There is a possibility that the pressure reaches 87 psi (600 kPa) while the tire is being inflated, but it is normal condition. Usually the pressure will drop in about 30 seconds.**
- **Do not operate the compressor for more than 10 minutes.**

If the tire pressure does not increase to **26 psi (180 kPa) within 10 minutes**, the tire may be seriously damaged and **the tire cannot be repaired with this tire puncture repair kit.** It is recommended that you contact a NISSAN certified LEAF dealer.

7. When the tire pressure is reaching the specified pressure or is at the minimum of 26 psi (180 kPa), turn the air compressor off. Remove the power plug from the power outlet and quickly remove the hose from the tire valve. Attach the protective cap and valve cap.

⚠ CAUTION

Leave the tire sealant bottle on the bottle holder in order to prevent sealant from spilling out.

8. Immediately drive the vehicle for 10 minutes or 2 miles (3 km) at a speed of 50 MPH (80 km/h) or less.
9. After driving, make sure that the air compressor switch is in the OFF (O) position, then screw the hose securely onto the tire valve. Check the tire pressure with the pressure gauge.

If the tire pressure drops under 19 psi (130 kPa):

The tire cannot be repaired with this tire puncture repair kit. It is recommended that you contact a NISSAN certified LEAF dealer.

If the tire pressure is 19 psi (130 kPa) or more but less than the specified pressure:

Turn the compressor switch to the ON (–) position and inflate the tire up to the specified pressure. Then repeat the steps from 8.

If the pressure drops again, **the tire cannot be repaired with this tire puncture repair kit.** It is recommended that you contact a NISSAN certified LEAF dealer.

When the tire pressure is the specified pressure:

The temporary repair is completed.

It is recommended that you visit a NISSAN certified LEAF dealer for tire repair/replacement as soon as possible.

CAUTION

Do not reuse the tire sealant bottle or the hose.

For a new tire sealant bottle and hose, it is recommended that you contact a NISSAN certified LEAF dealer.

After repairing tire

It is recommended that you visit a NISSAN certified LEAF dealer for tire repair/replacement as soon as possible.

JACKING UP VEHICLE AND REPLACING TIRES

Basic information

This section provides the information about the vehicle jack-up procedures and the tire replacement.

You can temporarily fix a minor tire puncture using the emergency tire puncture repair kit. (See "Repairing flat tire" (P.486).)

WARNING

- **Be sure to apply the parking brake firmly.**
- **Be sure to push the P (Park) button to engage the P (Park) position.**
- **Never change tires when the vehicle is on a slope, ice or slippery area. This is hazardous.**
- **Never change tires when the oncoming traffic is close to your vehicle. Call for professional road assistance.**

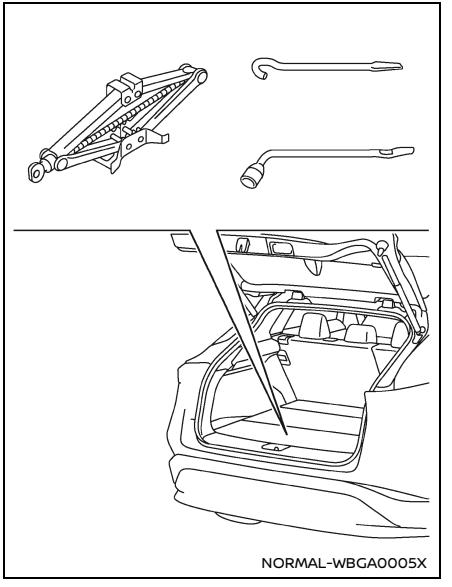

Preparing tools

Open the liftgate. Raise the luggage floor board. Remove the jacking tools.

The jack, jack rod and wheel nut wrench are not equipped as standard with this vehicle. It is recommended that you contact a NISSAN certified LEAF dealer

about acquiring the tools.

CAUTION

Do not touch floor metal directly. Doing so could result in any burns.

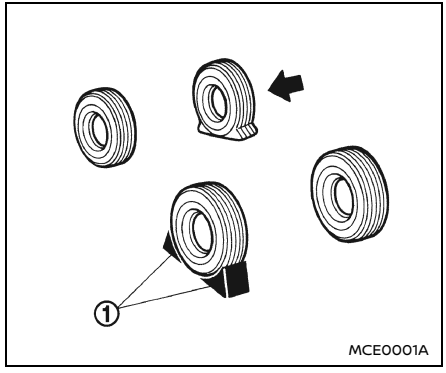

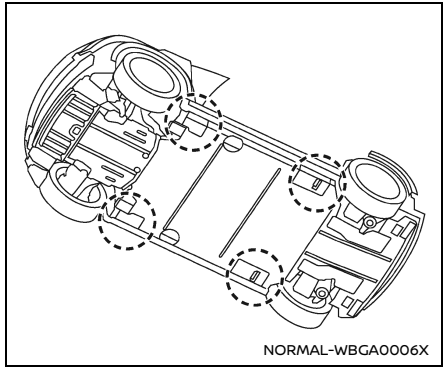

Blocking wheels

WARNING

Be sure to block the appropriate wheel to prevent the vehicle from moving, which may cause personal injury.

Place suitable blocks ① at both the front and back of the wheel diagonally opposite the flat tire ⬅ to prevent the vehicle from moving when it is jacked up.

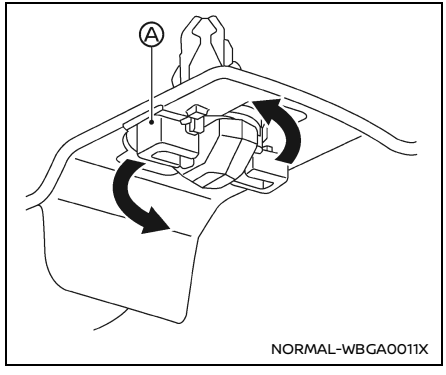

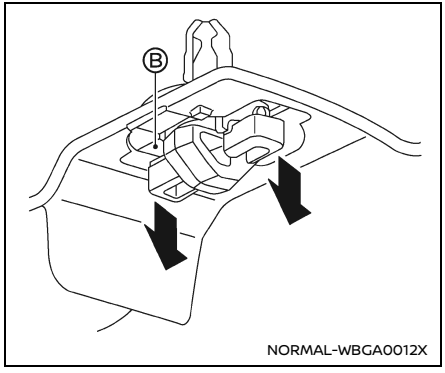

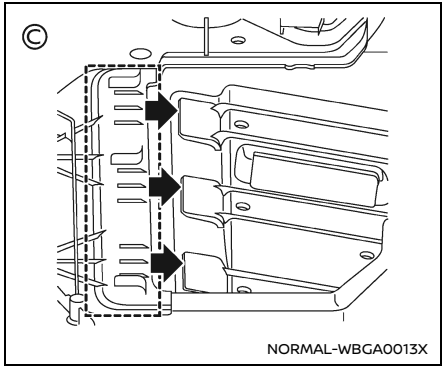

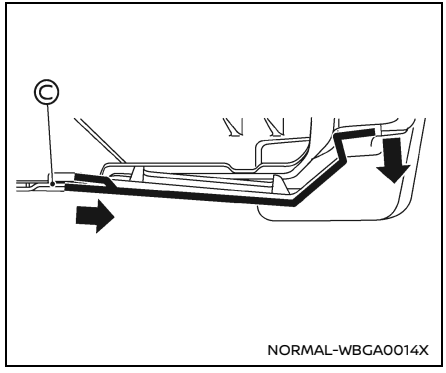

Removing/installing jack-up point cover

Four jack-up point covers are provided over the jack-up points to improve the aerodynamics.

⚠ WARNING

Do not remove the cover with bare hands. This may cause personal injury.

To remove the jack-up point cover:

1. Turn the clips Ⓐ counterclockwise.
   (Two clips for each jack-up point cover.)
2. Guide the clips through the cutout holes Ⓑ and pull the cover down.
3. Slide out the jack-up point cover from the vehicle under cover.

To install the jack-up point cover:

1. Insert the jack-up point cover so that it sandwiches the vehicle undercover Ⓒ.
2. Guide the clips through the cutout holes Ⓑ and push the cover up.
3. Turn the clips Ⓐ clockwise to lock the jack-up point cover.

Jacking up vehicle:

⚠ WARNING

- **Never get under the vehicle while it is supported only by the jack. If it is necessary to work under the vehicle, support it with safety stands.**
- **Use only the jack provided with your vehicle to lift the vehicle. Do not use the jack provided with your vehicle on other vehicles. The jack is designed for lifting only your vehicle during a tire change.**

- **Use the correct jack-up points. Never use any other part of the vehicle for jack support.**
- **Never jack up the vehicle more than necessary.**
- **Never use blocks on or under the jack.**
- **Do not start or run the EV system while vehicle is on the jack, as it may cause the vehicle to move.**
- **Do not allow passengers to stay in the vehicle while it is on the jack.**

Carefully read the caution label attached to the jack body and the following instructions.

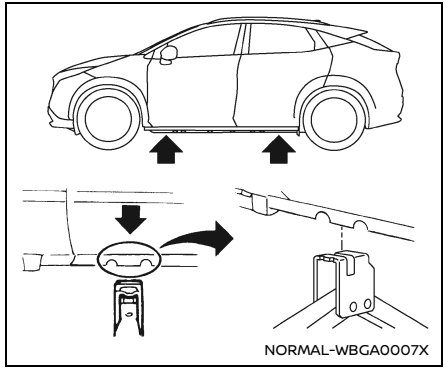

jack-up points

1. Place the jack directly under the jack-up point as illustrated so the top of the jack contacts the vehicle at the jack-up point. Align the jack head between the two notches in the front or the rear as shown. Also fit the groove of the jack head between the notches as shown.

   The jack should be used on firm and level ground.

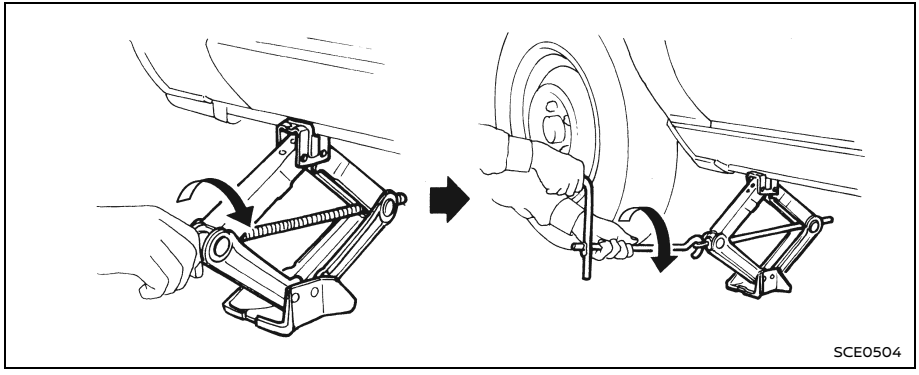

2. Loosen each wheel nut one or two turns by turning it counterclockwise with the wheel nut wrench. **Do not remove the wheel nuts until the tire is off the ground.**
3. To lift the vehicle, securely hold the jack lever and rod with both hands as shown above. Carefully raise the vehicle until the tire clears the ground. Remove the wheel nuts, and then remove the tire.

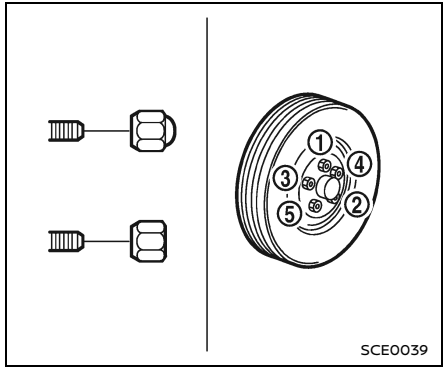

Installing tire

WARNING

- **Never use wheel nuts which are not provided with your vehicle. Incorrect wheel nuts or improperly tightened wheel nuts may cause the wheel to become loose or come off. This could cause an accident.**
- **Never use oil or grease on the wheel studs or nuts. This may cause the wheel nuts to become loose.**

1. Clean any mud or dirt from the surface between the wheel and hub.
2. Carefully put the tire on and tighten the wheel nuts with your fingers. Check that all the wheel nuts contact the wheel surface horizontally.
3. Tighten the wheel nuts alternately and evenly, more than 2 times in the sequence illustrated (① - ⑤), with the wheel nut wrench, until they are tight.
4. Lower the vehicle slowly until the tire touches the ground.
5. Tighten the wheel nuts securely, with the wheel nut wrench, in the sequence illustrated.
6. Lower the vehicle completely.

Tighten the wheel nuts to the specified torque with a torque wrench as soon as possible.

Wheel nut tightening torque:
80 ft-lb (108 N·m)

The wheel nuts must be kept tightened to specification at all times. It is recommended that the wheel nuts be tightened to specification at each lubrication interval.

- After adjusting tire pressure to the COLD tire pressure, the display of the tire pressures may show higher pressure than the COLD tire pressure after the vehicle has been driven more than 1 mile (1.6 km). This is because the tire pressurizes as tire temperature rises. This does not indicate a system malfunction.

After removing the jack from the jack-up point, install the jack-up point cover. See "Removing/installing jack-up point cover" (P.494).

Stowing damaged tire and tools

WARNING

Be sure that the tire, jack and tools used are properly stored after use. Such items can become dangerous projectiles in an accident or sudden stop.

1. Securely store the damaged tire, jack and tools used in the storage area.
2. Replace the luggage floor board.
3. Close the liftgate.

JUMP STARTING

To start your EV (Electric Vehicle) system with a booster battery, the instructions and precautions below must be followed.

Jump starting provides power to the 12-volt system to allow the electrical systems to operate. The electrical systems must be operating to allow the Li-ion battery to be charged. Jump starting does not charge the Li-ion battery. The Li-ion battery must be charged before the vehicle can be driven.

WARNING

- **Incorrect jump starting can lead to a 12-volt battery explosion. The 12-volt battery explosion may result in severe injury or death. It may also result in damage to the vehicle. Be sure to follow the instructions in this section.**
- **Explosive hydrogen gas is always present in the vicinity of the 12-volt battery. Keep all sparks and flames away from the 12-volt battery.**
- **Always wear suitable eye protection and remove rings, bracelets, and any other jewelry whenever working on or near a 12-volt battery.**

- **Never lean over the 12-volt battery while jump starting.**
- **Never allow battery fluid to come into contact with eyes, skin, clothes or the vehicle's painted surfaces. Battery fluid is a corrosive sulfuric acid which can cause severe burns. If the fluid comes into contact with anything, immediately flush the contacted area with plenty of water.**
- **Keep the 12-volt battery out of the reach of children.**
- **The booster battery must be rated at 12 volts. Use of an incorrectly rated battery will damage your vehicle.**
- **Never attempt to jump start a frozen battery. It could explode and cause serious injury.**
- **Your vehicle has an automatic cooling fan. It could come on at any time. Keep hands and other objects away from it.**
- **Always follow the instructions below. Failure to do so could result in damage to the DC/DC converter and cause personal injury.**

CAUTION

- **Do not attempt to perform a jump start on the 12-volt battery at the same time that the Li-ion battery is being charged. Doing so may damage the vehicle or charging equipment and could cause an injury.**
- **LEAF cannot be used as a booster vehicle because it cannot supply enough power to start a gasoline engine. However, a gasoline engine vehicle can be used to supply power to the 12-volt battery of electric vehicle.**

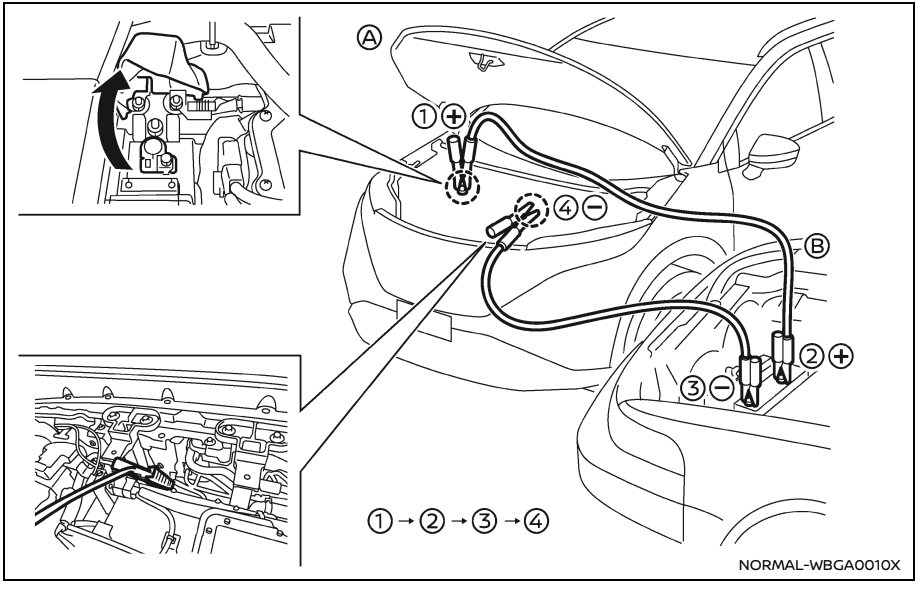

1. If the booster battery is in another vehicle Ⓑ, position the two vehicles (Ⓐ and Ⓑ) to bring their 12-volt batteries into close proximity to each other.

   Do not allow the two vehicles to touch.
2. Apply the parking brake.
3. Push the P (Park) button to place the vehicle in the P (Park) position.
4. Switch off all unnecessary electrical systems (headlights, heater, air conditioner, etc.).
5. Place the power switch in the OFF position.
6. Remove the vent caps (if so equipped) on the 12-volt battery. Cover the battery with a firmly wrung out moist cloth to reduce the hazard of an explosion.
7. Connect jumper cables in the sequence as illustrated (① → ② → ③ → ④).

⚠ CAUTION

- **If the 12-volt battery is discharged, the power switch cannot be moved from the OFF position. Connect the jumper cables to the booster vehicle Ⓑ before pushing the power switch.**
- **Always connect positive (+) to positive (+) and negative (–) to body ground (for example, as illustrated), not to the 12-volt battery.**
- **Make sure the jumper cables do not touch moving parts in the motor compartment and that the cable clamps do not contact any other metal.**

8. Start the engine of the booster vehicle Ⓑ.

9. While the booster vehicle Ⓑ engine is running, place the power switch in the READY to drive position.

⚠ CAUTION

If the system does not start right away, push the power switch to the OFF position and wait 10 seconds before trying again.

10. After starting your EV system, carefully disconnect the negative cable and then the positive cable (④ → ③ → ② → ①) and keep the READY to drive position over 20 minutes to charge the 12-volt battery.
11. Replace the vent caps (if so equipped). Be sure to dispose of the cloth used to cover the vent holes because it may be contaminated with corrosive acid.
12. If necessary, connect the vehicle to a charging station or NISSAN EVSE (Electric Vehicle Supply Equipment) (if so equipped) to charge the Li-ion battery. (See "Charging" (P.39) section.) The vehicle cannot be driven until the Li-ion battery is charged.

NOTE:

- **If it is not possible to turn the system ON by following this procedure, it is recommended that you contact a NISSAN certified LEAF dealer immediately.**
- **After jump starting, the "Headlight System Error See Owner's Manual" warning message may appear in the vehicle information display depending on the condition. To turn off the warning message, place the power switch in the OFF position, and open and close the driver's door. Keeping the door closed, wait for more than 3 minutes without any operation. Place the power switch in the ON position again.**

IF THE LI-ION BATTERY BECOMES COMPLETELY DISCHARGED

If the power limitation indicator light illuminates, the traction motor output is limited resulting in reduced vehicle speed. Stop the vehicle in a safe location before the Li-ion battery becomes completely discharged and no power is available to drive the vehicle.

If possible, place the power switch in the OFF position while waiting for assistance to prevent discharging the 12-volt battery.

NOTE:

If the Li-ion battery becomes completely discharged:

- **The vehicle is automatically placed in the ON position and it will not be possible to switch to the READY to drive position.**
- **The vehicle is automatically switched to the N (Neutral) position and it will not be possible to drive the vehicle.**

⚠ WARNING

If the vehicle is in the N (Neutral) position and the Li-ion battery and the 12-volt battery become completely discharged, the vehicle cannot be placed in the P (Park) position. If this occurs, apply the parking brake securely.

To place the vehicle in the READY to drive position so the vehicle can be driven, charge the Li-ion battery until the estimated driving range on the instrument panel changes from "---" to a numeric distance.

NOTE:

- **Some vibration may occur when the vehicle is stopped in case the Li-ion battery becomes completely discharged. This is not a malfunction.**
- **If the Li-ion battery is completely discharged, it is required to charge until the low battery charge warning light (yellow) turns off (white).**

PUSH STARTING

Do not attempt to start the system by pushing the vehicle.

CAUTION

An EV (Electric Vehicle) cannot be push-started or tow-started. Attempting to do so may cause traction motor damage.

TOWING YOUR VEHICLE

BASIC INFORMATION

When towing your vehicle, local regulations for towing must be followed. Incorrect towing equipment could damage your vehicle. Towing instructions are available from a NISSAN certified LEAF dealer. Local service operators are familiar with the applicable laws and procedures for towing. To assure proper towing and to prevent accidental damage to your vehicle, NISSAN recommends that you have a service operator tow your vehicle. It is advisable to have the service operator carefully read the following precautions.

WARNING

- **Never ride in a vehicle that is being towed.**
- **Never get under your vehicle after it has been lifted by a tow truck.**

CAUTION

- **When towing, make sure that the axles, steering system and powertrain are in working condition. If any of these conditions are not working, dollies or a flatbed tow truck must be used.**

- **Always attach safety chains before towing.**

NOTE:
If the battery is completely drained, the vehicle will not manually shift to other positions. For shifting to other positions, charge the battery or supply power following the jump starting procedure. Push the P (Park) button to shift to the P (Park) position before shifting to other positions.

For additional information about towing your vehicle behind a Recreational Vehicle (RV), see "Flat towing" (P.570).

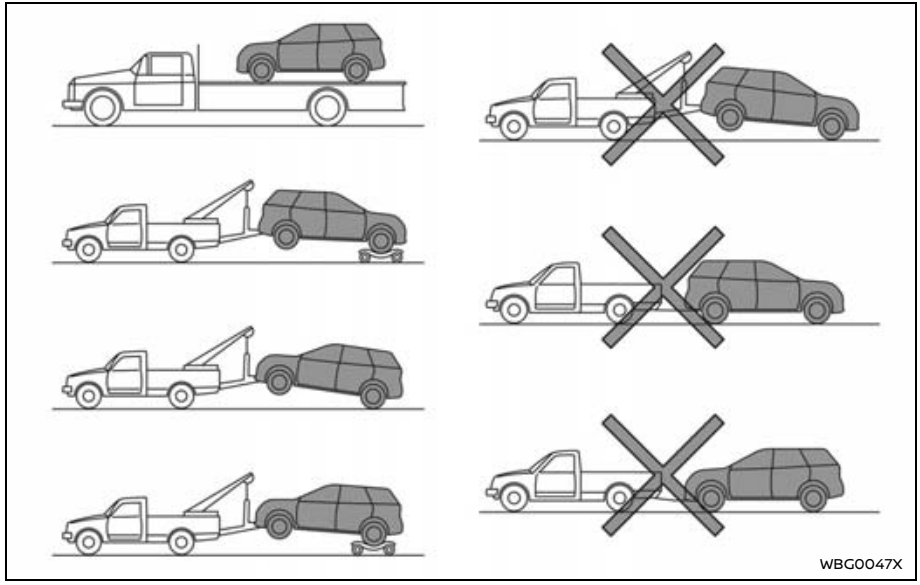

TOWING RECOMMENDED BY NISSAN

Two-Wheel Drive (2WD) models

NISSAN recommends that your vehicle be towed with the driving (front) wheels off the ground or that the vehicle be placed on a flatbed truck as illustrated.

CAUTION

- **Never tow with the front wheels on the ground or four wheels on the ground (forward or backward), as this may cause serious and expensive damage to the EV (Electric Vehicle) system.**
- **When towing this vehicle with the front wheels on towing dollies:**
  - **Place the power switch in the ON position. Secure the steering wheel in the straight-ahead position with a rope or similar device.**
  - **Place the shift position in the N (Neutral) position.**
- **When towing this vehicle with the rear wheels on the ground (if you do not use towing dollies): Always release the parking brake.**

NOTE:
If the electronic parking brake is released, the rear wheels can be grounded while towing. If the electronic parking brake is not released, towing dollies should be used. For additional information, refer to "Parking brake" (P.351).

VEHICLE RECOVERY (freeing a stuck vehicle)

Basic information

WARNING

To avoid vehicle damage, serious personal injury or death when recovering a stuck vehicle:

- **Contact a professional towing service to recover the vehicle if you have any questions regarding the recovery procedure.**
- **Tow chains or cables must be attached only to main structural members of the vehicle.**
- **Do not use the vehicle tie-downs to tow or free a stuck vehicle.**
- **Only use devices specifically designed for vehicle recovery and follow the manufacturer's instructions.**
- **Always pull the recovery device straight out from the front of the vehicle. Never pull at an angle.**
- **Route recovery devices so they do not touch any part of the vehicle except the attachment point.**

If your vehicle is stuck in sand, snow, mud, etc., use a tow strap or other device designed specifically for vehicle recovery. Always follow the manufacturer's instructions for the recovery device.

Rocking a stuck vehicle

WARNING

- **Stand clear of a stuck vehicle.**
- **Do not spin your tires at high speed. This could cause them to explode and result in serious injury. Parts of your vehicle could also overheat and be damaged.**

If your vehicle is stuck in sand, snow, mud, etc., use the following procedure:

1. Turn off the Vehicle Dynamic Control (VDC) system.
2. Make sure the area in front and behind the vehicle is clear of obstructions.
3. Turn the steering wheel right and left to clear an area around the front tires.
4. Slowly rock the vehicle forward and backward.
   - Shift back and forth between R (Reverse) and D (Drive).
   - Apply the accelerator as little as possible to maintain the rocking motion.

- Release the accelerator pedal before shifting between R and D.
- Do not spin the tires above 35 MPH (55 km/h).

5. If the vehicle cannot be freed after a few tries, contact a professional towing service to remove the vehicle.

7 Appearance and care

Cleaning exterior 506
- Basic information 506
- Washing 506
- Waxing 507
- Removing spots 507
- Underbody 507
- Glass 507
- Wheels 507
- Aluminum alloy wheels 508
- Chrome parts 508
- Tire dressing 508

Cleaning interior 509
- Basic information 509
- Air fresheners 510
- Floor mats 510
- Seat belts 511
- Cleaning the seat tracks 511
- EVSE (Electric Vehicle Supply Equipment) (if so equipped) 511

Corrosion protection 512
- Most common factors contributing to vehicle corrosion 512
- Environmental factors influence the rate of corrosion 512
- To protect your vehicle from corrosion 512

BASIC INFORMATION

In order to maintain the appearance of your vehicle, it is important to take proper care of it.

To protect the paint surfaces, wash your vehicle as soon as you can:

- after a rainfall to prevent possible damage from acid rain
- after driving on coastal roads
- when contaminants such as soot, bird droppings, tree sap, metal particles or bugs get on the paint surface
- when dust or mud builds up on the surface

Whenever possible, store or park your vehicle inside a garage or in a covered area.

When it is necessary to park outside, park in a shady area or protect the vehicle with a body cover.

Be careful not to scratch the paint surface when putting on or removing the body cover.

WASHING

Wash dirt off the vehicle with a wet sponge and plenty of water. Clean the vehicle thoroughly using a mild soap, a special vehicle soap or general purpose dishwashing liquid mixed with clean, lukewarm (never hot) water.

WARNING

Never use pressure washers inside of the charge port. Doing so may damage the electrical parts or may cause an electric shock which may result in serious personal injury or death especially when charging.

CAUTION

- **Do not concentrate water spray directly on the sonar sensors on the bumper as this will result in damage to the sensors.**
- **Do not use pressure washers capable of spraying water over 1,200 psi (8,274 kPa) to wash your vehicle. Use of high-pressure washers over, 1,200 psi (8,274 kPa) can result in damage to or removal of paint or graphics. Avoid using a high-pressure washer closer than 12 in (30 cm) to the vehicle. Always use a wide-angle nozzle only, keep the nozzle moving and do not concentrate the water spray on any one area.**
- **Do not use car washes that use acid in the detergent. Some car washes, especially brushless ones, use some acid for cleaning. The acid may react with some plastic vehicle components, causing them to crack. This could affect their appearance, and also could cause them not to function properly. Always check with your car wash to confirm that acid is not used.**
- **Do not wash the vehicle with strong household soap, strong chemical detergents, gasoline or solvents.**
- **Do not wash the vehicle in direct sunlight or while the vehicle body is hot, as the surface may become water-spotted.**
- **Avoid using tight-napped or rough cloths, such as washing mitts. Care must be taken when removing caked-on dirt or other foreign substances so the paint surface is not scratched or damaged.**
- **Do not wash the motor compartment. Doing so may damage the electrical parts.**

- **Before washing the vehicle by an automatic car wash, make sure that the charge port lid is completely closed.**

Rinse the vehicle thoroughly with plenty of clean water.

Inside flanges, seams and folds on the doors, hatches and hood are particularly vulnerable to the effects of road salt. Therefore, these areas must be regularly cleaned. Make sure that the drain holes in the lower edge of the door are open. Spray water under the body and in the wheel wells to loosen the dirt and wash away road salt.

Avoid leaving water spots on the paint surface by using a damp chamois to dry the vehicle.

WAXING

Regular waxing protects the paint surface and helps retain new vehicle appearance. Polishing is recommended to remove built-up wax residue and to avoid a weathered appearance before reapplying wax.

A NISSAN certified LEAF dealer can assist you in choosing the proper product.

- Wax your vehicle only after a thorough washing. Follow the instructions supplied with the wax.
- Do not use a wax containing any abrasives, cutting compounds or cleaners that may damage the vehicle finish.

Machine compound or aggressive polishing on a base coat/clear coat paint finish may dull the finish or leave swirl marks.

REMOVING SPOTS

Remove tar and oil spots, industrial dust, insects, and tree sap as quickly as possible from the paint surface to avoid lasting damage or staining. Special cleaning products are available at a NISSAN certified LEAF dealer or any automotive accessory stores. It is recommended that you visit a NISSAN certified LEAF dealer for these products.

UNDERBODY

WARNING

Never use high-pressure washers capable of spraying water under the vehicle when the vehicle undercover has been removed. Doing so can damage the Li-ion battery and cause an electrical shock that may result in serious injury or death.

In areas where road salt is used in winter, the underbody must be cleaned regularly. This will prevent dirt and salt from building up and causing the acceleration of corrosion on the underbody and suspension. Before the winter period and again in the spring, the underseal must be checked and, if necessary, re-treated.

GLASS

Use glass cleaner to remove smoke and dust film from the glass surfaces. It is normal for glass to become coated with a film after the vehicle is parked in the hot sun. Glass cleaner and a soft cloth will easily remove this film.

CAUTION

When cleaning the inside of the windows, do not use sharp-edged tools, abrasive cleaners or chlorine-based disinfectant cleaners. They could damage the electrical conductors or rear window defroster elements.

WHEELS

Wash the wheels when washing the vehicle to maintain their appearance.

- Clean the inner side of the wheels when the wheel is changed or the underside of the vehicle is washed.

- Inspect wheel rims regularly for dents or corrosion. Such damage may cause loss of pressure or poor seal at the tire bead.
- NISSAN recommends that the road wheels be waxed to protect against road salt in areas where it is used during winter.

⚠ CAUTION

Do not use abrasive cleaners when washing the wheels.

ALUMINUM ALLOY WHEELS

Wash regularly with a sponge dampened in a mild soap solution, especially during winter months in areas where road salt is used. Salt could discolor the wheels if not removed.

⚠ CAUTION

Follow the directions below to avoid staining or discoloring the wheels:

- **Do not use a cleaner that uses strong acid or alkali contents to clean the wheels.**
- **Do not apply wheel cleaners to the wheels when they are hot. The wheel temperature should be the same as ambient temperature.**
- **Rinse the wheel to completely remove the cleaner within 15 minutes after the cleaner is applied.**

CHROME PARTS

Clean chrome parts regularly with a non-abrasive chrome polish to maintain the finish.

TIRE DRESSING

NISSAN does not recommend the use of tire dressings. Tire manufacturers apply a coating to the tires to help reduce discoloration of the rubber. If a tire dressing is applied to the tires, it may react with the coating and form a compound. This compound may come off the tire while driving and stain the vehicle paint.

If you choose to use a tire dressing, take the following precautions:

- Use a water-based tire dressing. The coating on the tire dissolves more easily with an oil-based tire dressing.
- Apply a light coat of tire dressing to help prevent it from entering the tire tread/grooves (where it would be difficult to remove).
- Wipe off excess tire dressing using a dry towel. Make sure the tire dressing is completely removed from the tire tread/grooves.
- Allow the tire dressing to dry as recommended by tire dressing manufacturer.

CLEANING INTERIOR

BASIC INFORMATION

Occasionally remove loose dust from the interior trim, plastic parts and seats using a vacuum cleaner or soft bristled brush. Wipe the vinyl and leather surfaces with a clean, soft cloth dampened in mild soap solution, then wipe clean with a dry soft cloth.

Regular care and cleaning is required in order to maintain the appearance of the leather (if so equipped).

Before using any fabric protector, read the manufacturer's recommendations. Some fabric protectors contain chemicals that may stain or bleach the seat material.

Use a soft cloth dampened only with water, to clean the meter and gauge lens.

WARNING

- **Do not use water or acidic cleaners (hot steam cleaners) on the seat. This can damage the seat or occupant classification sensors. This can also affect the operation of the air bag system and result in serious personal injury.**
- **Do not use wax or silicone based products in the interior of the vehicle. Doing so may cause damage to interior parts, electrical devices, or electronics.**

CAUTION

- **Never use benzine, thinner, or any similar material.**
- **For cleaning, use a soft cloth, dampened with water. Never use a rough cloth, alcohol, benzine, thinner or any kind of solvent or paper towel with a chemical cleaning agent. They will scratch or cause discoloration to the lens.**
- **Do not spray any liquid such as water on the meter lens. Spraying liquid may cause the system to malfunction.**
- **Small dirt particles can be abrasive and damaging to the leather surfaces and should be removed promptly. Do not use saddle soap, car waxes, polishes, oils, cleaning fluids, solvents, detergents or ammonia-based cleaners as they may damage the leather's natural finish.**
- **Never use fabric protectors unless recommended by the manufacturer.**
- **Do not use glass or plastic cleaner on meter or gauge lens covers. It may damage the lens cover.**
- **Do not spill on or make contact with interior surfaces while handling air fresheners, aroma agents, cosmetics, sunscreen, etc. They may cause permanent discoloration, stain, crack, paint peeling, etc. depending on the ingredients. If they contact the interior surface, wipe them off immediately using a soft cloth.**
- **Do not use the chlorine-based cleaning liquid such as chlorine dioxide and hypochlorous acid, which may cause the paint peeling, corrosion, etc. If it is unavoidable to clean or sterilize interior surfaces, use less than 75% ethanol. Wipe the interior parts with a dry cloth dampened with ethanol. Wipe off ethanol completely. If you leave it uncleaned, it may cause paint peeling, discoloration, etc. Since ethanol is flammable, be careful of fire.**

AIR FRESHENERS

Most air fresheners use a solvent that could affect the vehicle interior. If you use an air freshener, take the following precautions:

- Hanging-type air fresheners can cause permanent discoloration when they contact vehicle interior surfaces. Place the air freshener in a location that allows it to hang free and not contact an interior surface.
- Liquid-type air fresheners typically clip on the vents. These products can cause immediate damage and discoloration when spilled on interior surfaces.

Carefully read and follow the manufacturer's instructions before using air fresheners.

FLOOR MATS

Basic information

WARNING

To avoid potential pedal interference that may result in a collision, injury or death:

- **NEVER place a floor mat on top of another floor mat in the driver front position or install them upside down or backwards.**
- **It is recommended that you use only genuine NISSAN floor mats specifically designed for use in your vehicle model and model year.**
- **Properly position the mats in the floorwell using the floor mat positioning hooks. See "Floor mat installation" (P.510).**
- **Make sure the floor mat does not interfere with pedal operation.**
- **Periodically check the floor mats to make sure they are properly installed.**
- **After cleaning the vehicle interior, check the floor mats to make sure they are properly installed.**

The use of genuine NISSAN floor mats can extend the life of your vehicle carpet and make it easier to clean the interior. Mats should be maintained with regular cleaning and replaced if they become excessively worn.

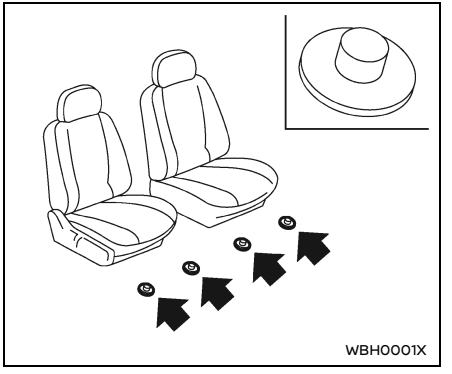

Floor mat installation

Your vehicle is equipped with floor mat positioning hook(s). The number and shape of the floor mat positioning hook(s) for each seating position varies depending on the vehicle.

When installing genuine NISSAN floor mats, follow the installation instructions provided with the floor mat and the following:

1. Position the floor mat in the floorwell so that the floor mat grommet holes are aligned with the hook(s).

2. Push the grommet holes into the hook(s) and secure them. Ensure that the floor mat is properly positioned.
3. Make sure the floor mat does not interfere with pedal operation. With the power switch in the OFF position and the shift position in the P (Park) position, fully apply and release all pedals. The floor mat must not interfere with pedal operation or prevent the pedal from returning to its normal position. It is recommended you see a NISSAN certified LEAF dealer for details about installing the floor mats in your vehicle.

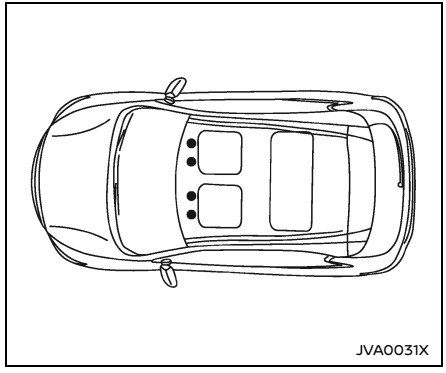

Positioning hook(s)

The illustration shows the location of the floor mat positioning hook(s).

SEAT BELTS

The seat belts can be cleaned by wiping them with a sponge dampened in a mild soap solution. Allow the belts to dry completely in the shade before using them.

See "Seat belts" (P.96).

WARNING

Do not allow wet seat belts to roll up in the retractor. NEVER use bleach, dye, or chemical solvents to clean the seat belts, since these materials may severely weaken the seat belt webbing.

CLEANING THE SEAT TRACKS

CAUTION

Periodically clean the seat tracks to prevent reduction of ability to move the seats.

Clean periodically with a high-powered vacuum cleaner. Dirt and debris may reduce the ability to adjust the seat. A wet cleansing agent may be used if necessary.

EVSE (Electric Vehicle Supply Equipment) (if so equipped)

The Electric Vehicle Supply Equipment (EVSE) can be cleaned by wiping gently with a soft cloth dampened in a 3% mild soap solution. Wipe and rinse the soap solution off with a cloth dampened with water and allow the EVSE to dry in a shady and well-ventilated place.

MOST COMMON FACTORS CONTRIBUTING TO VEHICLE CORROSION

- The accumulation of moisture-retaining dirt and debris in body panel sections, cavities, and other areas.
- Damage to paint and other protective coatings caused by gravel and stone chips or minor traffic accidents.

ENVIRONMENTAL FACTORS INFLUENCE THE RATE OF CORROSION

Moisture

Accumulation of sand, dirt and water on the vehicle body underside can accelerate corrosion. Wet floor coverings will not dry completely inside the vehicle, and should be removed for drying to avoid floor panel corrosion.

Relative humidity

Corrosion will be accelerated in areas of high relative humidity, especially those areas where the temperatures stay above freezing where atmospheric pollution exists, or where road salt is used.

Temperature

A temperature increase will accelerate the rate of corrosion to those parts which are not well ventilated.

Air pollution

Industrial pollution, the presence of salt in the air in coastal areas, or heavy road salt use will accelerate the corrosion process. Road salt will also accelerate the disintegration of paint surfaces.

TO PROTECT YOUR VEHICLE FROM CORROSION

- Wash and wax your vehicle often to keep the vehicle clean.
- Always check for minor damage to the paint and repair it as soon as possible.
- Keep drain holes at the bottom of the doors open to avoid water accumulation.
- Check the underbody for accumulation of sand, dirt or salt. If present, wash with water as soon as possible.

⚠ CAUTION

- **NEVER remove dirt, sand or other debris from the passenger compartment by washing it out with a hose. Remove dirt with a vacuum cleaner.**
- **Never allow water or other liquids to come in contact with electronic components inside the vehicle as this may damage them.**

Chemicals used for road surface deicing are extremely corrosive. They accelerate corrosion and deterioration of underbody components such as the brake lines, brake cables, floor pan and fenders.

In winter, the underbody must be cleaned periodically.

For additional protection against rust and corrosion, which may be required in some areas, it is recommended you consult a NISSAN certified LEAF dealer.

8 Do-it-yourself

Maintenance precautions 514
Motor compartment check locations 516
Cooling system 516
- Basic information 516
- Checking coolant level 518
- Changing coolant 518

Gear box oil 519
Brake fluid 519
Windshield wiper blades 520
- Cleaning 520
- Replacing 520

Brakes 521
- Basic information 521
- Brake pad wear warning 521

Window washer fluid 521
12-volt battery 523
- Basic information 523
- 12-volt battery 524
- Jump starting 525

Intelligent Key battery replacement 525
Fuses 527
Lights 528
- Basic information 528
- Headlights 528
- Exterior and interior lights 528

Wheels and tires 529
- Basic information 529
- Tire pressure 529
- Tire labeling 533
- Types of tires 536
- Tire chains 537
- Changing wheels and tires 538
- Emergency tire puncture repair kit 540

MAINTENANCE PRECAUTIONS

When performing any inspection or maintenance work on your vehicle, always take care to prevent serious accidental injury to yourself or damage to the vehicle. The following are general precautions that should be closely observed.

WARNING

- **The EV (Electric Vehicle) system uses high voltage up to approximately DC 400 volt. The system can be hot during and after starting and when the vehicle is shut off. Be careful of both the high voltage and the high temperature. Obey the labels that are attached to the vehicle.**
- **Never disassemble, remove or replace high-voltage parts and cables as well as their connectors. High-voltage cables are colored orange.**
- **Disassembling, removing or replacing those parts or cables can cause severe burns or electric shock that may result in serious injury or death. The vehicle high voltage system has no user serviceable parts. It is recommended that you take your vehicle to the NISSAN certified LEAF dealer for any necessary maintenance.**
- **Park the vehicle on a level surface, apply the parking brake securely and chock the wheels to prevent the vehicle from moving. Select the P (Park) or N (Neutral) shift position.**
- **If you must work with the EV (Electric vehicle) system is turned on, keep hands, clothing, hair and tools away from moving fans and any other moving parts.**
- **Make sure that the power switch is in the OFF position and the charge connector has been disconnected when performing any maintenance work.**
- **It is advisable to secure or remove any loose clothing and remove any jewelry, such as rings, watches, etc. before working on your vehicle.**
- **Always wear eye protection whenever you work on your vehicle.**
- **Never get under the vehicle while it is supported by a jack.**
- **Keep smoking materials, flames and sparks away from the 12-volt battery.**

CAUTION

- **Do not work under the hood while the motor compartment is hot. Push the power switch in the OFF position and wait until it cools down.**
- **Avoid direct contact with used coolant. Improperly disposed coolant and/or other vehicle fluids can damage the environment. Always conform to local regulations for the disposal of vehicle fluids.**

- **Never connect or disconnect the battery or any transistorized component while the power switch is in the ON position.**
- **Your vehicle is equipped with an automatic cooling fan. It may come on at any time without warning, even if the power switch is not in the ON or READY to drive position. To avoid injury, always disconnect the negative 12-volt battery cable before working near the fan.**
- **When"Charging status indicator light" (P.75) is lit or blinking, do not perform a maintenance work. There is a risk of electric shock because the high voltage system is operating.**
- **Do not perform any maintenance work in the following situations.**
  - **When charging the Li-ion battery with the EVSE (if so equipped) or a charge cable.**
  - **When remote climate control (if so equipped) or Climate Schedule is working. See "Climate Schedule" (P.324).**
  - **When the software is updating.**

This "8. Do-it-yourself" section gives instructions regarding only those items that are relatively easy for an owner to perform.

A genuine NISSAN Service Manual is also available. (See "Owner's manual/service manual order information" (P.575).)

You should be aware that incomplete or improper servicing may result in operating difficulties and could affect your warranty coverage. **If in doubt about any servicing, we recommend that it be done by a NISSAN certified LEAF dealer.**

MOTOR COMPARTMENT CHECK LOCATIONS

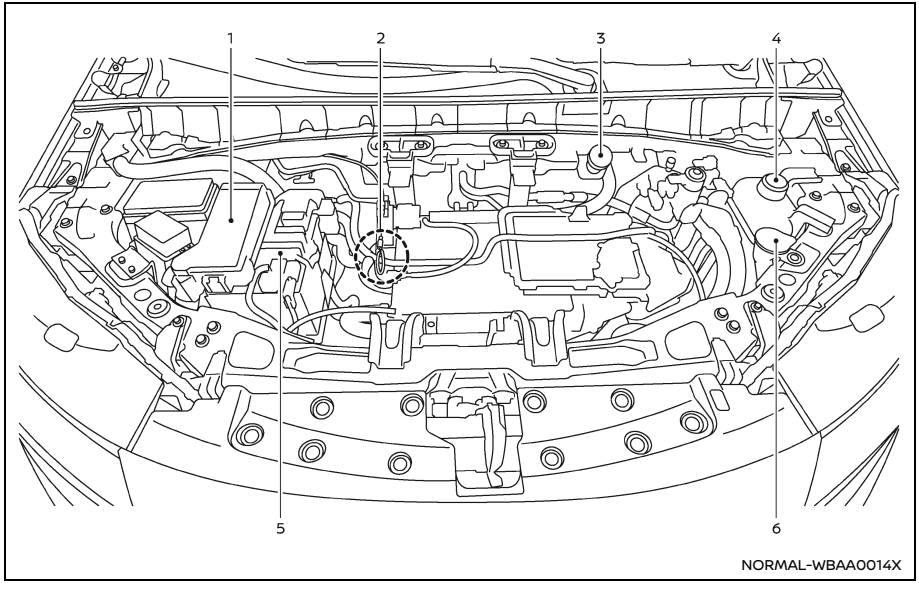

Example

1. Fuse/fusible link holders
2. DC Fast Charge connector mechanical release
3. Brake fluid reservoir
4. Coolant reservoir
5. 12–volt battery
6. Window washer fluid reservoir

COOLING SYSTEM

BASIC INFORMATION

The cooling system is filled at the factory with a pre-diluted mixture of 50% Genuine NISSAN Long Life Antifreeze/Coolant (blue) and 50% water to provide year-round antifreeze and coolant protection. The antifreeze solution contains rust and corrosion inhibitors. Additional cooling system additives are not necessary.

Open source software licenses:

The electric water pump for the electric powertrain of this vehicle incorporates an open source software.

Refer to the license web site at: https://www.aisin.com/info/ewp/license001.html

WARNING

- **Never remove the coolant reservoir cap when the motor compartment is hot. Wait until the motor compartment cools down.**
- **Coolant is poisonous and should be stored carefully in marked containers out of the reach of children.**

CAUTION

- **Never use any additives in the coolant such as radiator sealer in the cooling system. This may cause damage to electrical equipment such as the motor and inverter.**

- **When adding or replacing coolant, be sure to use only a Genuine NISSAN Long Life Antifreeze/Coolant (blue) or equivalent. Genuine NISSAN Long Life Antifreeze/Coolant (blue) is prediluted to provide antifreeze protection to −34°F (−37°C) . If additional freeze protection is needed due to the weather conditions where you operate your vehicle, add Genuine NISSAN Long Life Antifreeze/Coolant (blue) concentrate following the directions on the container. If an equivalent coolant other than Genuine NISSAN Long Life Antifreeze/Coolant (blue) is used, follow the coolant manufacturer's instructions to maintain minimum antifreeze protection to −34°F (−37°C). The use of other types of coolant solutions other than Genuine NISSAN Long Life Antifreeze/Coolant (blue) or equivalent may damage the cooling system.**

- **The life expectancy of the factory-fill coolant is 125,000 miles (200,000 km) or 15 years. Mixing any other type of coolant other than Genuine NISSAN Long Life Antifreeze/Coolant (blue) (or equivalent coolant), including Genuine NISSAN Long Life Antifreeze/Coolant (green), or the use of non-distilled water may reduce the life expectancy of the factory-filled coolant. For additional information, refer to the "Maintenance and schedules" section.**

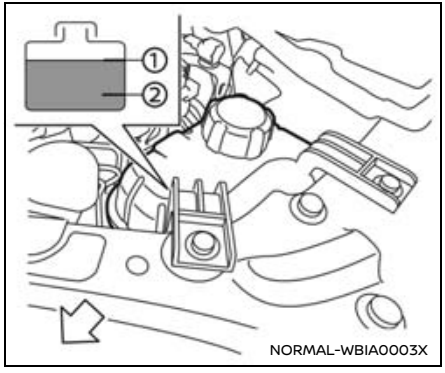

CHECKING COOLANT LEVEL

Check the coolant level **in the reservoir when the high voltage parts are cold.** If the coolant level is below the MIN level ②, open the reservoir cap and add coolant up to the MAX level ①. If the reservoir is empty, check the coolant level in the coolant reservoir **when the high voltage parts are cold.** If there is insufficient coolant in the coolant reservoir, fill the coolant reservoir with coolant up to the reservoir cap opening and also add it to the reservoir up to the MAX level ①.

Tighten the cap securely after adding coolant.

For additional information on the location of the coolant reservoir, see "Motor compartment check locations" (P.516).

If the cooling system frequently requires coolant, it is recommended that you visit a NISSAN certified LEAF dealer.

CHANGING COOLANT

It is recommended that major cooling system repairs should be performed by a NISSAN certified LEAF dealer. The service procedures can be found in the appropriate NISSAN Service Manual.

Improper servicing can result in reduced heater performance.

⚠ WARNING

- **To avoid the danger of being scalded, never change the coolant when the motor compartment is hot.**
- **Never remove the coolant reservoir cap when the motor compartment is hot. Serious burns could be caused by high-pressure fluid escaping from the radiator.**
- **Avoid direct skin contact with used coolant. If skin contact is made, wash thoroughly with soap or hand cleaner as soon as possible.**
- **Keep coolant out of reach of children and pets.**

Coolant must be disposed of properly. Check your local regulations.

GEAR BOX OIL

When checking or replacement is required, it is recommended that you visit a NISSAN certified LEAF dealer for this service.

CAUTION

- **Use only Genuine NISSAN Matic S ATF. Do not mix with other oil.**
- **Using oil other than Genuine NISSAN Matic S ATF will cause deterioration in drivability and reduction gear durability, and may damage the reduction gear, which is not covered by the NISSAN's New Vehicle Limited Warranty.**

BRAKE FLUID

For additional brake fluid information, see "Recommended fluids/lubricants and capacities" (P.558).

WARNING

- **Use only new fluid from a sealed container. Old, inferior or contaminated fluid may damage the brake system. The use of improper fluids can damage the brake system, and affect the vehicle's stopping ability.**
- **Clean the filler cap before removing.**
- **Brake fluid is poisonous and should be stored carefully in marked containers out of the reach of children.**

CAUTION

Do not spill the fluid on any painted surfaces. This will damage the paint. If fluid is spilled, immediately wash the surface with water.

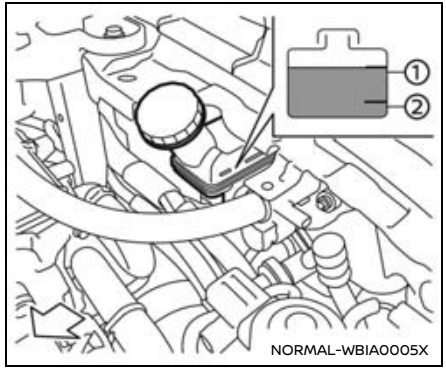

Check the fluid level in the reservoir. If the fluid is below the MIN line ② or the brake warning light illuminates, add Genuine NISSAN Super Heavy Duty Brake Fluid or equivalent **DOT 3** fluid up to the MAX line ① . If fluid must be added frequently, the system should be checked. It is recommended that you visit a NISSAN certified LEAF dealer for this service.

CLEANING

If your windshield is not clear after using the windshield washer or if a wiper blade chatters when running, wax or other material may be on the blade or windshield.

Clean the outside of the windshield with a washer solution or a mild detergent. Your windshield is clean if beads do not form when rinsing with clear water.

Clean each blade by wiping it with a cloth soaked in a washer solution or a mild detergent. Then rinse the blade with clear water. If your windshield is still not clear after cleaning the blades and using the wiper, replace the blades.

CAUTION

Worn windshield wiper blades can damage the windshield and impair driver vision.

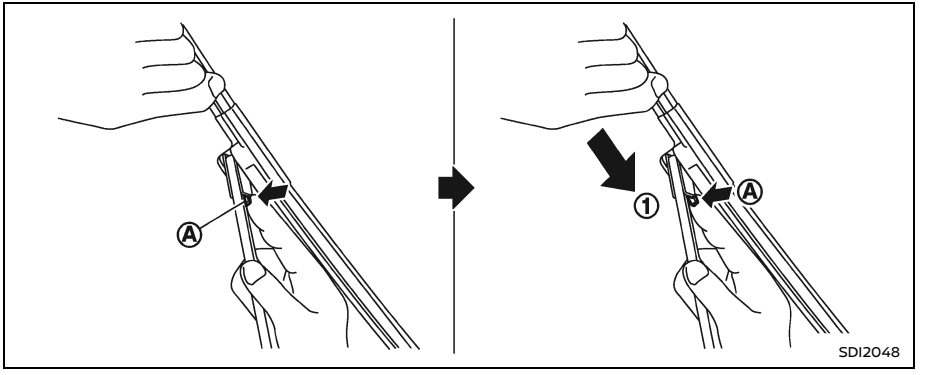

REPLACING

Replace the wiper blades if they are worn.

Before replacing the wiper blades, the wiper should be in the fully up position to avoid scratching the motor compartment hood or damaging the wiper arm. To pull up the wiper arm, see "Wiper and washer switch" (P.212).

1. Pull up the wiper arms (first driver's side, then passenger's side).
2. Push the release tab Ⓐ, and then move the wiper blade down the wiper arm ① while pushing the release tab to remove.
3. Insert the new wiper blade onto the wiper arm until a click sounds.
4. Rotate the wiper blade so the dimple is in the groove.

CAUTION

- **After wiper blade replacement, return the wiper arm to its original position; otherwise it may be damaged when the hood is opened.**
- **Make sure the wiper blades contact the glass; otherwise the arm may be damaged from wind pressure.**

BRAKES

BASIC INFORMATION

If the brakes do not operate properly, have the brakes checked. It is recommended that you visit a NISSAN certified LEAF dealer.

BRAKE PAD WEAR WARNING

The disc brake pads have audible wear warnings. When a brake pad requires replacement, it will make a high pitched scraping sound when the vehicle is in motion. This scraping sound will first occur only when the brake pedal is depressed. After more wear of the brake pad, the sound will always be heard even if the brake pedal is not depressed. Have the brakes checked as soon as possible if the wear warning sound is heard.

Under some driving or climate conditions, occasional brake squeak, squeal or other noise may be heard. Occasional brake noise during light to moderate stops is normal and does not affect the function or performance of the brake system.

Proper brake inspection intervals should be followed. For additional information, see a separate maintenance booklet.

WINDOW WASHER FLUID

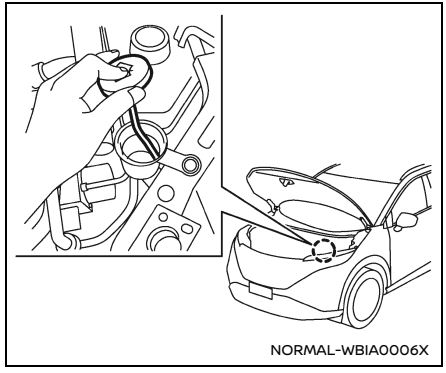

Example

WARNING

Anti-freeze is poisonous and should be stored carefully in marked containers out of the reach of children.

To check the fluid level, use your finger to plug the center hole of the cap/tube assembly, then remove it from the reservoir. If there is no fluid in the tube, add fluid.

Add a washer solvent to the washer for better cleaning. In the winter season, add a windshield washer antifreeze. Follow the manufacturer's instructions for the mixture ratio.

Fill the window washer fluid reservoir periodically.

Add fluid when the low washer fluid warning appears (if so equipped).

Refill the reservoir more frequently when driving conditions require an increased amount of window washer fluid.

Recommended fluid:

Genuine NISSAN Windshield Washer Concentrate Cleaner & Antifreeze or equivalent

CAUTION

- **Do not substitute anti-freeze coolant for window washer solution. This may result in damage to the paint.**
- **Do not fill the window washer reservoir tank with washer fluid concentrates at full strength. Some methyl alcohol based washer fluid concentrates may permanently stain the grille if spilled while filling the window washer reservoir tank.**

- **Pre-mix washer fluid concentrates with water to the manufacturer's recommended levels before pouring the fluid into the window washer reservoir tank. Do not use the window washer reservoir tank to mix the washer fluid concentrate and water.**

Caution symbols for battery			⚠ WARNING
①		No smoking, No exposed flames, No sparks	Do not expose the battery to electrical sparks, flames or smoking. Hydrogen gas generated by the battery is explosive. Explosive gases can cause blindness or injury.
②		Shield eyes	Handle the battery cautiously. Always wear eye protection glasses to protect against explosion or battery acid.
③		Keep away from children	Never allow children to handle battery. Keep the battery out of the reach of children.
④		Battery acid	Do not allow battery fluid to contact your skin, eyes, fabrics, or painted surfaces. Sulfuric acid can cause blindness or severe burns. After touching a battery or battery cap, do not touch or rub your eyes. Thoroughly wash your hands. If the acid contacts your eyes, skin or clothing, immediately flush with water for at least 15 minutes and seek medical attention. Battery fluid is acid. If the battery fluid gets into your eyes or onto your skin, it could cause loss of your eyesight or burns.
⑤		Note operating instructions	Before handling the battery, read this instruction carefully to ensure correct and safe handling.
⑥		Explosive gas	Hydrogen gas generated by battery fluid is explosive. Explosive gases can cause blindness or injury.

WAI0270X

BASIC INFORMATION

- If the 12-volt battery is labeled "do not open" it is maintenance free and 12-volt battery fluid should not be checked. It is recommended that you visit a NISSAN certified LEAF dealer or a qualified specialist workshop to confirm the 12-volt battery's performance.
- Keep the 12-volt battery surface clean and dry. Clean the 12-volt battery with a solution of baking soda and water.
- Make certain the terminal connections are clean and securely tightened.
- If the vehicle is not to be used for 30 days or longer, disconnect the negative ⊖ 12-volt battery terminal cable to prevent discharging it.

NOTE:
Care should be taken to avoid situations that can lead to potential 12-volt bat-

tery discharge and potential no-start conditions such as:

1. **Installation or extended use of electronic accessories that consume 12-volt battery power when the EV system is not running (Phone chargers, GNSS, DVD players, etc.).**
2. **Vehicle is not driven regularly and/or only driven short distances.**

In these cases, the 12-volt battery may need to be charged to maintain 12-volt battery health.

WARNING

- **Do not operate the vehicle if the fluid in the 12-volt battery is low. Low 12-volt battery fluid can cause a higher load on the 12-volt battery which can generate heat, reduce 12-volt battery life, and in some cases lead to an explosion.**
- **Do not expose the 12-volt battery to flames or electrical sparks. Hydrogen gas generated by the 12-volt battery is explosive. Do not allow 12-volt battery fluid to contact your skin, eyes, fabrics or painted surfaces. After touching a 12-volt battery or 12-volt battery cap, do not touch or rub your eyes. Thoroughly wash your hands. If the acid contacts your eyes, skin or clothing, immediately flush with water for at least 15 minutes and seek medical attention.**
- **When working on or near a 12-volt battery, always wear suitable eye protection and remove all jewelry.**
- **12-volt battery posts, terminals and related accessories contain lead and lead compounds. Wash hands after handling.**
- **Keep the 12-volt battery out of the reach of children.**
- **Do not tip the 12-volt battery.**

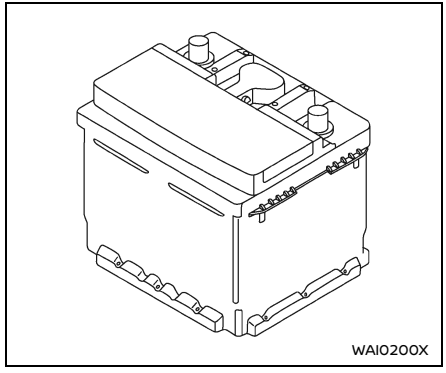

Example

NOTE:
Do not try to open the top of the 12-volt battery.

This 12-volt battery is not equipped with removable vent caps.

12-VOLT BATTERY

For a maintenance free battery, it is not required to check the fluid level. However, NISSAN recommends to check it periodically at a NISSAN certified LEAF dealer.

NOTE:
For replacing the 12-volt battery, it is recommended that you visit a NISSAN certified LEAF dealer.

JUMP STARTING

Jump starting provides power to the 12 volt system to allow the electrical systems to operate. The electrical systems must be operating to allow the Li-ion battery to be charged. Jump starting does not charge the Li-ion battery. The Li-ion battery must be charged before the vehicle can be driven.

If jump starting is necessary, see "Jump starting" (P.497). If the power switch does not switch to READY to drive position by jump starting, the 12-volt battery may have to be replaced. It is recommended that you contact a NISSAN certified LEAF dealer.

INTELLIGENT KEY BATTERY REPLACEMENT

WARNING

- **Ingestion hazard: Death or serious injury can occur if ingested.**
- **A swallowed button cell or coin battery can cause internal chemical burns in as little as 2 hours.**
- **Keep new and used batteries out of reach of children.**
- **Be careful not to allow children to swallow removed parts.**
- **Seek immediate medical attention if a battery is suspected to be swallowed or inserted inside any part of the body.**
- **For treatment information call the National battery ingestion hotline @ 1-800-498-8666.**
- **There is a danger of explosion if the battery is incorrectly replaced. Replace only with the same or equivalent type of battery. Incorrectly replacing the battery can lead to injury or death.**
- **Do not crush or cut the battery.**
- **Do not subject the battery to extremely low air pressure at high altitude.**
- **Do not expose the battery to excessive heat such as sunshine, fire or similar heat sources.**

CAUTION

- **An improperly disposed battery can harm the environment. Always confirm local regulations for battery disposal.**
- **When changing batteries, do not let dust or oil get on the components.**

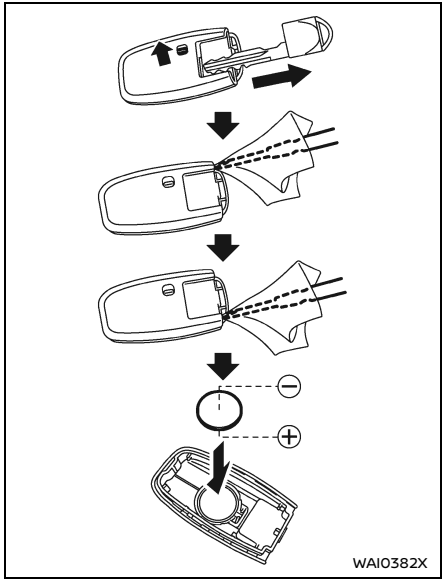

Replace the battery in the Intelligent Key as follows:

1. Remove the mechanical key from the Intelligent Key.
2. Insert a small screwdriver into the slit (on the right and left sides) and twist it to separate the upper part from the lower part. Use a cloth to protect the casing.
3. Replace the battery with a new one.

   Recommended battery:

   CR2032 or equivalent

   - Do not touch the internal circuit and electric terminals as doing so could cause a malfunction.
   - Hold the battery by the edges. Holding the battery across the contact points will seriously deplete the storage capacity.
   - Make sure that the ⊕ side faces the bottom of the case.

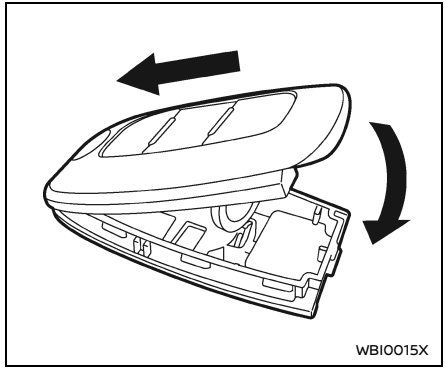

4. Align the tips of the upper and lower parts, and then push them together until it is securely closed.
5. Operate the buttons to check its operation.

If you need any assistance for replacement, it is recommended you visit a NISSAN certified LEAF dealer for this service.

NOTE:

FCC Notice:

For USA:

This device complies with Part 15 of the FCC Rules. Operation is subject to the following two conditions: (1) this device may not cause harmful interference,

and (2) this device must accept any interference received, including interference that may cause undesired operation.

NOTE:

Changes or modifications not expressly approved by the party responsible for compliance could void the user's authority to operate the equipment.

For Canada:

This device contains licence-exempt transmitter(s)/receiver(s) that comply with Innovation, Science and Economic Development Canada's licence-exempt RSS(s). Operation is subject to the following two conditions: (1) This device may not cause interference. (2) This device must accept any interference, including interference that may cause undesired operation of the device.

Do not open the fuse box.

If you have noticed an electrical equipment malfunction, it is recommended that you consult a NISSAN certified LEAF dealer.

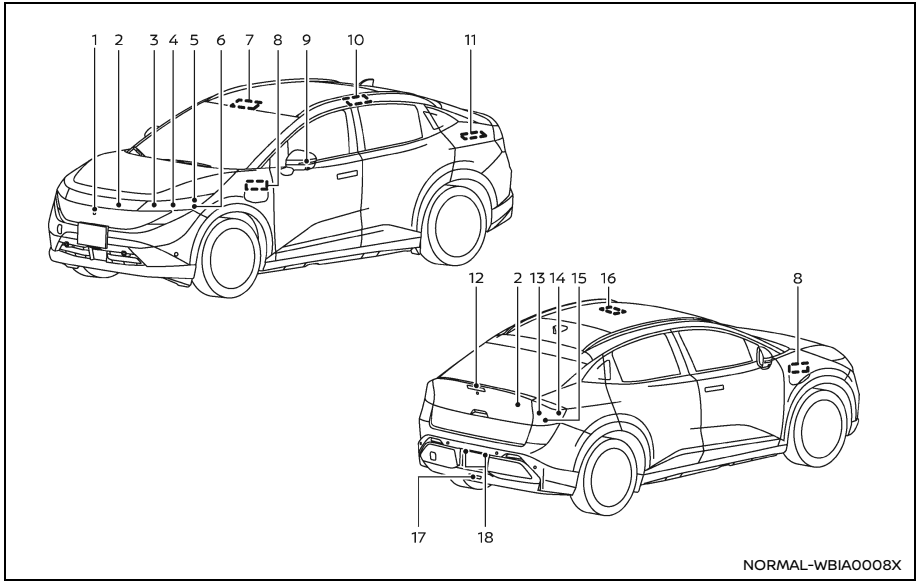

BASIC INFORMATION

1. Emblem light (if so equipped)
2. Signature light (if so equipped)
3. Headlight (high-beam)
4. Headlight (low-beam)
5. Front parking light/Daytime running light/Front turn signal light
6. Front side marker light
7. Map light
8. Charge port light
9. Side turn signal light (if so equipped)
10. Rear personal light (if so equipped)
11. Cargo light
12. High-mounted stop light
13. Stop light/Tail light
14. Rear side marker light
15. Rear turn signal light
16. Rear room light (if so equipped)
17. Back-up light
18. License plate light

HEADLIGHTS

Fog may temporarily form inside the lens of the exterior lights in the rain or in a car wash. A temperature difference between the inside and the outside of the lens causes the fog. This is not a malfunction. If large drops of water collect inside the lens, it is recommended you visit a NISSAN certified LEAF dealer for servicing.

If replacement is required, it is recommended you visit a NISSAN certified LEAF dealer for this service.

EXTERIOR AND INTERIOR LIGHTS

This vehicle is equipped with LED lights. Visit your NISSAN certified LEAF dealer for LED light replacement, replacement bulb type or any bulb changing procedure not listed in the section. Always check with the Parts Department at a NISSAN certified LEAF dealer for the latest parts infor-

mation.

BASIC INFORMATION

If you have a flat tire, see "Flat tire" (P.485).

TIRE PRESSURE

Tire Pressure Monitoring System (TPMS)

WARNING

Radio waves could adversely affect electric medical equipment. Those who use a pacemaker should contact the electric medical equipment manufacturer for the possible influences before use.

This vehicle is equipped with the Tire Pressure Monitoring System (TPMS). It monitors tire pressure of all tires. When the low tire pressure warning light is lit, and the “Tire Pressure Low - Add Air” warning message is displayed in the vehicle information display, one or more of your tires is significantly under-inflated.

The TPMS will activate only when the vehicle is driven at speeds above 16 MPH (25 km/h). Also, this system may not detect a sudden drop in tire pressure (for example a flat tire while driving).

For more details, see "Low tire pressure warning light" (P.165), "Tire Pressure Monitoring System (TPMS)" (P.333) and "Tire Pressure Monitoring System (TPMS)" (P.485).

Tire inflation pressure

Check the pressure of the tires often and always prior to long distance trips. The recommended tire pressure specifications are shown on the Tire and Loading Information label under the “Cold Tire Pressure” heading. The Tire and Loading Information label is affixed to the driver side center pillar. Tire pressures should be checked regularly because:

- Most tires naturally lose air over time.
- Tires can lose air suddenly when driven over potholes or other objects or if the vehicle strikes a curb while parking.

The tire pressures should be checked when the tires are cold. The tires are considered COLD after the vehicle has been parked for 3 or more hours, or driven less than 1

mile (1.6 km) at moderate speeds.

TPMS with Easy Fill Tire Alert provides visual and audible signals outside the vehicle for inflating the tires to the recommended COLD tire pressure. (See "TPMS with Easy Fill Tire Alert" (P.336).)

Incorrect tire pressure, including under inflation, may adversely affect tire life and vehicle handling.

WARNING

- **Improperly inflated tires can fail suddenly and cause an accident.**
- **The Gross Vehicle Weight Rating (GVWR) is located on the F.M.V.S.S./C.M.V.S.S. certification label. The vehicle weight capacity is indicated on the Tire and Loading Information label. Do not load your vehicle beyond this capacity. Overloading your vehicle may result in reduced tire life, unsafe operating conditions due to premature tire failure, or unfavorable handling characteristics and could also lead to a serious accident. Loading beyond the specified capacity may also result in failure of other vehicle components.**
- **Before taking a long trip, or whenever you heavily load your vehicle, use a tire pressure gauge to ensure that the tire pressures are at the specified level.**
- **For additional information regarding tires, refer to "Important Tire Safety Information" (US) or "Tire Safety Information" (Canada) in the Warranty Information Booklet.**

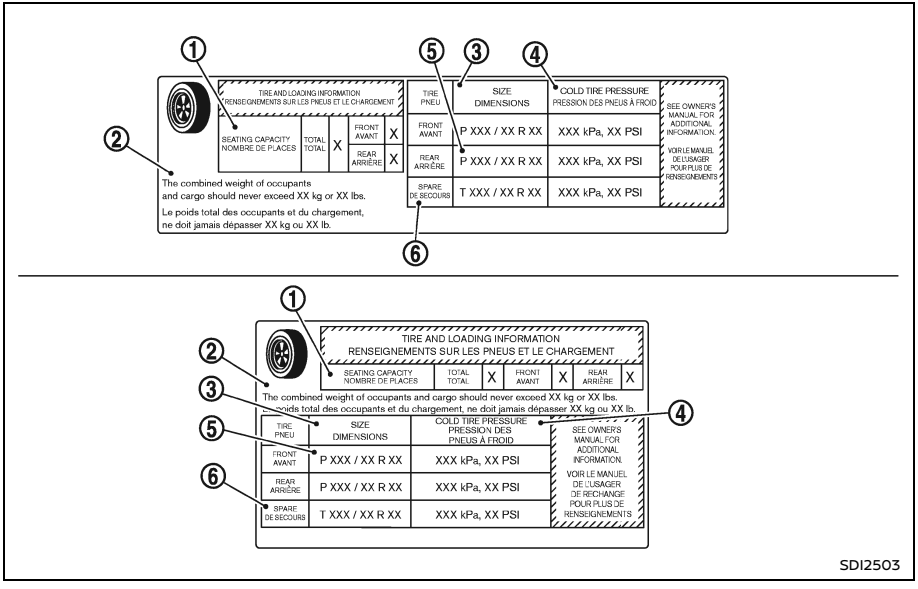

Tire and Loading Information label

① Seating capacity: The maximum number of occupants that can be seated in the vehicle.

② Vehicle load limit: See "Vehicle loading information" (P.566).

③ Original size: The size of the tires originally installed on the vehicle at the factory.

④ Cold tire pressure: Inflate the tires to this pressure when the tires are cold. Tires are considered COLD after the vehicle has been parked for 3 or more hours, or driven less than 1 mile (1.6 km) at moderate speeds. The recommended cold tire inflation is set by the manufacturer to provide the best balance of tire wear, vehicle handling, driveability, tire noise, etc., up to the vehicle's GVWR.

⑤ Tire size — see "Basic information" (P.533).

⑥ Spare tire size or compact spare tire size (if so equipped)

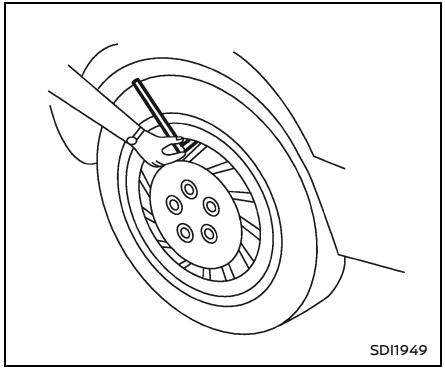

Checking the tire pressure

1. Remove the valve stem cap from the tire.
2. Press the pressure gauge squarely onto the valve stem. Do not press too hard or force the valve stem sideways, or air will escape. If the hissing sound of air escaping from the tire is heard while checking the pressure, reposition the gauge to eliminate this leakage.
3. Remove the gauge.
4. Read the tire pressure on the gauge stem and compare it to the specification shown on the Tire and Loading Information label.
5. Add air to the tire as needed. If too much air is added, press the core of the valve stem briefly with the tip of the gauge stem to release pressure. Recheck the pressure and add or release air as needed.
6. Install the valve stem cap.
7. Check the pressure of all other tires.

	SIZE	COLD TIRE INFLATION PRESSURE
FRONT ORIGINAL TIRE	235/45 R19	260 kPa, 38 PSI
	215/55 R18	250 kPa, 36 PSI (Alloy wheel) 320 kPa, 46 PSI (Steel wheel)
REAR ORIGINAL TIRE	235/45 R19	260 kPa, 38 PSI
	215/55 R18	250 kPa, 36 PSI (Alloy wheel) 320 kPa, 46 PSI (Steel wheel)

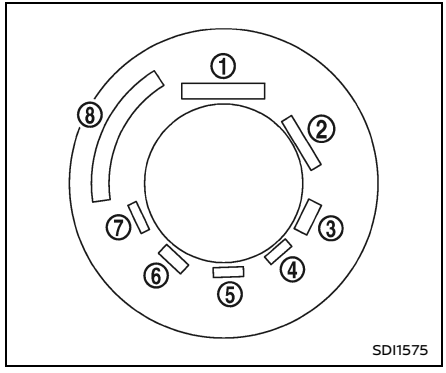

Example

TIRE LABELING

Basic information

Federal law requires tire manufacturers to place standardized information on the sidewall of all tires. This information identifies and describes the fundamental characteristics of the tire and also provides the tire identification number (TIN) for safety standard certification. The TIN can be used to identify the tire in case of a recall.

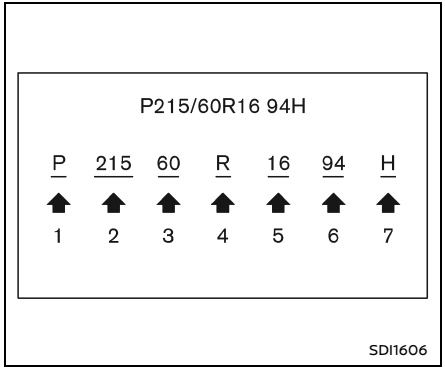

Example

① Tire size (example: P215/60R16 94H)

1. P: The "P" indicates the tire is designed for passenger vehicles. (Not all tires have this information.)
2. Three-digit number (215): This number gives the width in millimeters of the tire from sidewall edge to sidewall edge.
3. Two-digit number (60): This number, known as the aspect ratio, gives the tire's ratio of height to width.
4. R: The "R" stands for radial.
5. Two-digit number (16): This number is the wheel or rim diameter in inches.
6. Two- or three-digit number (94): This number is the tire's load index. It is a measurement of how much weight each tire can support. You may not find this information on all tires because it is not required by law.
7. H: Tire speed rating. You should not drive the vehicle faster than the tire speed rating.

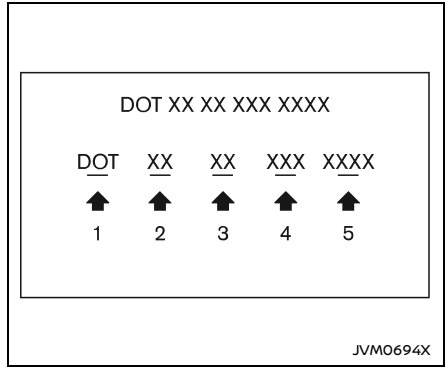

Example (Type A) (if so equipped)

② TIN (Tire Identification Number) for a new tire (example: DOT XX XX XXX XXXX)

1. DOT: Abbreviation for the "Department Of Transportation". The symbol can be placed above, below or to the left or right of the Tire Identification Number.
2. Two-digit code: Manufacturer's identification mark
3. Two-digit code: Tire size
4. Three-digit code: Tire type code (Optional)

5. Four numbers represent the week and year the tire was built. For example, the numbers 3103 means the 31st week of 2003. If these numbers are missing, then look on the other sidewall of the tire.

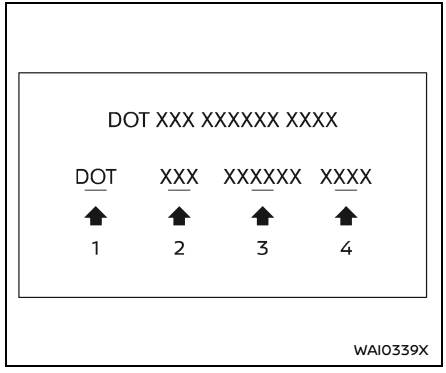

Example (Type B) (if so equipped)

② TIN (Tire Identification Number) for a new tire (example: DOT XXX XXXXXX XXXX)

1. DOT: Abbreviation for the "Department of Transportation". The symbol can be placed above, below or to the left or right of the Tire Identification Number.
2. Three-digit code: Manufacturer's identification mark
3. Six-digit code: Descriptive code used to identify significant characteristics of the tire.
4. Four numbers represent the week and year the tire was built. For example, the numbers 3103 means the 31st week of 2003.

③ Tire ply composition and material

The number of layers or plies of rubber-coated fabric in the tire.

Tire manufacturers also must indicate the materials in the tire, which include steel, nylon, polyester, and others.

④ Maximum permissible inflation pressure

This number is the greatest amount of air pressure that should be put in the tire. Do not exceed the maximum permissible inflation pressure.

⑤ Maximum load rating

This number indicates the maximum load in kilograms and pounds that can be carried by the tire. When replacing the tires on the vehicle, always use a tire that has the same load rating as the factory installed tire.

⑥ Term of “tubeless” or “tube type”

Indicates whether the tire requires an inner tube (“tube type”) or not (“tubeless”).

⑦ The word “radial”

The word “radial” is shown, if the tire has radial structure.

⑧ Manufacturer or brand name

Manufacturer or brand name is shown.

Other tire-related terminology

In addition to the many terms that are defined throughout this section, Intended Outboard Sidewall is (1) the sidewall that contains a whitewall, bears white lettering or bears manufacturer, brand and/or model name molding that is higher or deeper than the same molding on the other sidewall of the tire, or (2) the outward facing sidewall of an asymmetrical tire that has a particular side that must always face outward when mounted on a vehicle.

TYPES OF TIRES

Basic information

WARNING

- **When changing or replacing tires, be sure all four tires are of the same type (Example: Summer, All Season or Snow) and construction. A NISSAN certified LEAF dealer may be able to help you with information about tire type, size, speed rating and availability.**
- **Replacement tires may have a lower speed rating than the factory equipped tires, and may not match the potential maximum vehicle speed. Never exceed the maximum speed rating of the tire.**
- **Replacing tires with those not originally specified by NISSAN could affect the proper operation of the TPMS.**
- **For additional information regarding tires, refer to “Important Tire Safety Information” (US) or “Tire Safety Information” (Canada) in the Warranty Information Booklet.**
- **Always use tires of the same type, size, brand, construction and tread pattern on all four wheels. Failure to do so may result in a circumference difference between tires on the front and rear axles which can cause the Vehicle Dynamic Control (VDC) system to malfunction resulting in personal injury or death, excessive tire wear and may damage the transmission and differential gears.**

All season tires

NISSAN specifies all season tires on some models to provide good performance all year, including snowy and icy road conditions. All Season tires are identified by ALL SEASON and/or M&S (Mud and Snow) on the tire sidewall. Snow tires have better snow traction than All Season tires and may be more appropriate in some areas.

Summer tires

NISSAN specifies summer tires on some models to provide superior performance on dry roads. Summer tire performance is substantially reduced in snow and ice. Summer tires do not have the tire traction rating M&S on the tire sidewall.

If you plan to operate your vehicle in snowy or icy conditions, NISSAN recommends the use of SNOW tires or ALL SEASON tires on all four wheels.

Snow tires

If snow tires are needed, it is necessary to select tires equivalent in size and load rating to the original equipment tires. If you do not, it can adversely affect the safety and handling of your vehicle.

Generally, snow tires will have lower speed ratings than factory equipped tires and may not match the potential maximum vehicle speed. Never exceed the maximum speed rating of the tire.

If you install snow tires, they must be the same size, brand, construction and tread pattern on all four wheels.

For additional traction on icy roads, studded tires may be used. However, U.S. states and Canadian provinces prohibit their use. Check local, state and provincial laws before installing studded tires. Skid and traction capabilities of studded snow tires, on wet or dry surfaces, may be poorer than that of non-studded snow tires.

TIRE CHAINS

WARNING

If tire chains are used with this vehicle, they must allow sufficient clearance between the tire and the closest vehicle suspension or body component. Failure to use the correct chains, or not properly installing chains, can damage the brakes, suspension or other vehicle parts and cause a crash in which a person could be seriously injured or killed.

Use of tire chains may be prohibited according to location. Check the local laws before installing tire chains. When installing tire chains, make sure they are the proper size for the tires on your vehicle and are installed according to the chain manufacturer's suggestions.

Use only SAE Class S chains. Class "S" chains are used on vehicles with restricted tire to vehicle clearance. Vehicles that can use Class "S" chains are designed to meet the SAE standard minimum clearances between the tire and the closest vehicle suspension or body component required to accommodate the use of a winter traction device (tire chains or cables). The minimum clearances are determined using the factory equipped tire size. Other types may damage your vehicle.

Use chain tensioners when recommended by the tire chain manufacturer to ensure a tight fit. Loose end links of the tire chain must be secured or removed to prevent the possibility of whipping action damage to the fenders or underbody. If possible, avoid fully loading your vehicle when using tire chains. In addition, drive at a reduced speed. Otherwise, your vehicle may be damaged and/or vehicle handling and performance may be adversely affected.

Tire chains must be installed only on the front wheels and not on the rear wheels.

Do not use tire chains on dry roads. Driving with tire chains in such conditions can cause damage to the various mechanisms of the vehicle due to some overstress.

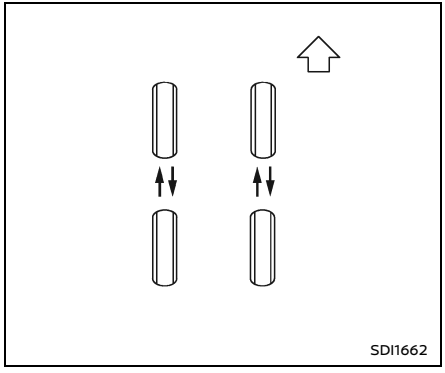

CHANGING WHEELS AND TIRES

Tire rotation

NISSAN recommends rotating the tires at the specified interval shown in the maintenance schedule. (For tire replacing procedures, see "Jacking up vehicle and replacing tires" (P.492).)

As soon as possible, tighten the wheel nuts to the specified torque with a torque wrench.

Wheel nut tightening torque: 80 ft-lb (108 N·m)

The wheel nuts must be kept tightened to the specification at all times. It is recommended that wheel nuts be tightened to the specification at each tire rotation interval.

WARNING

- **After rotating the tires, check and adjust the tire pressure.**
- **Retighten the wheel nuts when the vehicle has been driven for 600 miles (1,000 km) (also in cases of a flat tire, etc.).**
- **For additional information regarding tires, refer to "Important Tire Safety Information" (US) or "Tire Safety Information" (Canada) in the Warranty Information Booklet.**
- **After rotating the tires, do not use the Easy-Fill Tire Alert to adjust the tire pressure. Instead use a gauge to adjust the tires to the correct pressure in accordance with Tire and Loading Information label.**
- **To ensure proper operation of the Easy-Fill Tire Alert system after a tire rotation, reset and register the sensor to their new installed locations. It is recommended that you visit a NISSAN certified LEAF dealer for this service.**

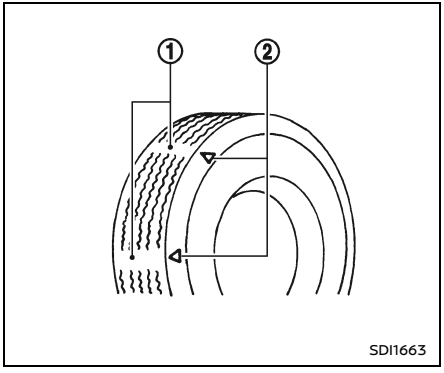

① Wear indicator
② Wear indicator location mark

Tire wear and damage

WARNING

- **Tires should be periodically inspected for wear, cracking, bulging or objects caught in the tread. If excessive wear, cracks, bulging or deep cuts are found, the tire(s) should be replaced.**
- **The original tires have built-in tread wear indicators. When wear indicators are visible, the tire(s) should be replaced.**
- **Tires degrade with age and use. Have tires over 6 years old checked by a qualified technician, because some tire damage may not be obvious. Replace the tires as necessary to prevent tire failure and possible personal injury.**
- **For additional information regarding tires, refer to "Important Tire Safety Information" (US) or "Tire Safety Information" (Canada) in the Warranty Information Booklet.**

Replacing wheels and tires

When replacing a tire, use the same size, tread design, speed rating and load carrying capacity as originally equipped. (See "Wheels and tires" (P.561) for recommended types and sizes of tires and wheels.)

WARNING

- **The use of tires other than those recommended or the mixed use of tires of different brands, construction (bias, bias-belted or radial), or tread patterns can adversely affect the ride, braking, handling, VDC system, ground clearance, body-to-tire clearance, tire chain clearance, speedometer calibration, headlight aim and bumper height. Some of these effects may lead to accidents and could result in serious personal injury.**
- **For Two-Wheel Drive (2WD) models, if your vehicle was originally equipped with 4 tires that were the same size and you are only replacing 2 of the 4 tires, install the new tires on the rear axle. Placing new tires on the front axle may cause loss of vehicle control in some driving conditions and cause an accident and personal injury.**

- **If the wheels are changed for any reason, always replace with wheels which have the same off-set dimension. Wheels of a different off-set could cause premature tire wear, degrade vehicle handling characteristics and/or interference with the brake discs/drums. Such interference can lead to decreased braking efficiency and/or early brake pad/shoe wear. See for wheel off-set dimensions.**
- **Replacing tires with those not originally specified by NISSAN could affect the proper operation of the TPMS.**
- **The TPMS sensor may be damaged if it is not handled correctly. Be careful when handling the TPMS sensor.**
- **When replacing the TPMS sensor, the ID registration may be required. It is recommended you visit a NISSAN certified LEAF dealer for ID registration.**
- **Do not use a valve stem cap that is not specified by NISSAN. The valve stem cap may become stuck.**
- **Be sure that the valve stem caps are correctly fitted. Otherwise the valve may be clogged up with dirt and cause a malfunction or loss of pressure.**
- **Do not install a damaged or deformed wheel or tire even if it has been repaired. Such wheels or tires could have structural damage and could fail without warning.**
- **The use of retread tire is not recommended.**
- **For additional information regarding tires, refer to "Important Tire Safety Information" (US) or "Tire Safety Information" (Canada) in the Warranty Information Booklet.**

Wheel balance

Unbalanced wheels may affect vehicle handling and tire life. Even with regular use, wheels can get out of balance. Therefore, they should be balanced as required.

Wheel balance service should be performed with the wheels off the vehicle. Spin balancing the wheels on the vehicle could lead to mechanical damage.

For additional information regarding tires, refer to "Important Tire Safety Information" (US) or "Tire Safety Information" (Canada) in the Warranty Information Booklet.

Care of wheels

See "Wheels" (P.507) for details about care of the wheels.

EMERGENCY TIRE PUNCTURE REPAIR KIT

The emergency tire puncture repair kit is supplied to the vehicle instead of a spare tire. The kit must be used for temporarily fixing a minor tire puncture. After using the repair kit, it is recommended that you visit a NISSAN certified LEAF dealer as soon as possible for tire inspection and repair/replacement.

See "Flat tire" (P.485) for more details.

9 Maintenance and schedules

Maintenance requirement 542
Basic information 542
General maintenance 542
Scheduled maintenance 542
Where to go for service 542
General maintenance 542
Basic information 542
Explanation of general maintenance items 542
Explanation of scheduled maintenance items 545
Basic information 545
Explanation of scheduled maintenance items 545
Chassis and body maintenance 545
Maintenance schedules 546
Basic information 546
Additional maintenance items for severe operating conditions 546
EV maintenance schedules (YM52 electric motor) 547
Additional information 555

MAINTENANCE REQUIREMENT

BASIC INFORMATION

Some day-to-day and regular maintenance is essential to maintain your vehicle good mechanical condition, and its Electric Vehicle (EV) system performance.

It is the owner's responsibility to make sure that the scheduled maintenance, and general maintenance, is performed.

As the vehicle owner, you are the only one who can ensure that your vehicle receives proper maintenance. You are a vital link in the maintenance chain.

GENERAL MAINTENANCE

General maintenance includes those items which should be checked during normal day-to-day operation. They are essential for proper vehicle operation. It is your responsibility to perform these procedures regularly as prescribed.

Performing general maintenance checks requires minimal mechanical skill and only a few general automotive tools.

These checks or inspections can be done by yourself, a qualified technician or, if you prefer, a NISSAN certified LEAF dealer.

SCHEDULED MAINTENANCE

The maintenance items listed in this section are required to be serviced at regular intervals. However under severe driving conditions, additional or more frequent maintenance will be required.

WHERE TO GO FOR SERVICE

If maintenance service is required or your vehicle appears to malfunction, have the systems checked and serviced. It is recommended that you visit a NISSAN certified LEAF dealer for this service.

NISSAN technicians are well-trained specialists and are kept up-to-date with the latest service information through technical bulletins, service tips, and training programs. They are fully qualified to work on NISSAN vehicles **before** work begins.

If your vehicle is involved in a collision, it is recommended that you ask your NISSAN certified LEAF dealer where the nearest NISSAN Certified Collision Center is located, or go to http://collision.nissanusa.com.

You can be confident that a NISSAN certified LEAF dealer's service department performs the best job to meet the maintenance requirements on your vehicle.

GENERAL MAINTENANCE

BASIC INFORMATION

During the normal day-to-day operation of the vehicle, general maintenance should be performed regularly as prescribed in this section. If you detect any unusual sounds, vibrations or smells, be sure to check for the cause or a NISSAN certified LEAF dealer check it promptly. In addition, it is recommended that you visit a NISSAN certified LEAF dealer if you think that repairs are required.

When performing any checks or maintenance work, closely observe the "Maintenance precautions" (P.514).

EXPLANATION OF GENERAL MAINTENANCE ITEMS

Basic information

WARNING

Failure to follow the procedures listed within this section may result in personal injury.

Additional information on the following items with "*" is found in the "Do-it-yourself" section.

Outside the vehicle

The maintenance items listed here should

be performed from time to time, unless otherwise specified.

Doors and motor hood: Check that the doors and motor hood operate properly. Also ensure that all latches lock securely. Lubricate hinges, latches, latch pins, rollers and links if necessary. Make sure that the secondary latch keeps the motor hood from opening when the primary latch is released.

When driving in areas using road salt or other corrosive materials, check lubrication frequently.

Check that the gas stays or struts properly and securely hold the hood, trunk, or rear hatch fully open. If the hood, trunk, or rear hatch is not held open, have the gas stays or struts replaced.

Lights*: Clean the headlights on a regular basis. Make sure that the headlights, stop lights, tail lights, turn signal lights, and other lights are all operating properly and installed securely. Also check headlight aim.

Road wheel nuts (lug nuts)*: When checking the tires, make sure no wheel nuts are missing, and check for any loose wheel nuts. Tighten if necessary.

Tire rotation*: Rotate tires at the specified interval shown in the maintenance schedule.

Tires*: Check the pressure with a gauge often and always prior to long distance trips. If necessary, adjust the pressure in all tires, to the pressure specified. Check carefully for damage, cuts or excessive wear.

Tire Pressure Monitoring System (TPMS) tire pressure sensor: It is recommended that you replace the TPMS tire pressure sensor assembly when the tires are replaced due to wear or age.

Wheel alignment and balance: If the vehicle pulls to either side while driving on a straight and level road, or if you detect uneven or abnormal tire wear, there may be a need for wheel alignment.

If the steering wheel or seat vibrates at normal highway speeds, wheel balancing may be needed.

For additional information regarding tires, refer to "Important Tire Safety Information" (US) or "Tire Safety Information" (Canada) in the Warranty Information Booklet.

Windshield: Clean the windshield on a regular basis. Check the windshield at least every six months for cracks or other damage. Have a damaged windshield repaired by a qualified repair facility. It is recommended that you have a damaged windshield repaired by a NISSAN certified LEAF dealer, or a NISSAN Certified Collision Center. To locate a collision center in your area, refer to http://collision.nissanusa.com.

Windshield wiper blades*: Check for cracks or wear if they do not wipe properly.

Inside the vehicle

The maintenance items listed here should be checked on a regular basis, such as when performing scheduled maintenance, cleaning the vehicle, etc.

Accelerator pedal: Check the pedal for smooth operation and make sure the pedal does not catch or require uneven effort. Keep the floor mat away from the pedal.

Brake pedal: Check the pedal for smooth operation. If the brake pedal suddenly goes down further than normal, the pedal feels spongy or the vehicle seems to take longer to stop, it is recommended that you visit a NISSAN certified LEAF dealer immediately. Keep the floor mat away from the pedal.

Brakes: Check that the brakes do not pull the vehicle to one side when applied.

Electric shift P (Park) position mechanism: On a steep hill check that the vehicle is held securely while the vehicle is in

the P (Park) position without applying any brakes.

Parking brake: Check the parking brake operation regularly. The vehicle should be securely held on a fairly steep hill with only the parking brake applied. If the parking brake needs adjusting, it is recommended that you visit a NISSAN certified LEAF dealer for this service.

Seats: Check seat position controls such as seat adjusters, seatback recliner, etc., to ensure they operate smoothly and all latches lock securely in every position. Check that the head restraints/headrests move up and down smoothly and the locks (if so equipped) hold securely in all latched positions.

Seat belts: Check that all parts of the seat belt system (for example, buckles, anchors, adjusters and retractors) operate properly and smoothly, and are installed securely. Check the belt webbing for cuts, fraying, wear or damage.

Steering wheel: Check for changes in the steering conditions, such as excessive free play, hard steering or strange noises.

Warning lights and chimes: Make sure all warning lights and chimes are operating properly.

Windshield defroster: Check that the air emits from the defroster outlets properly and in sufficient quantity when operating the heater or air conditioner.

Windshield wiper and washer*: Check that the wipers and washer operate properly and that the wipers do not streak.

Under the hood and vehicle

The maintenance items listed here should be checked periodically.

12–volt battery (except for maintenance free batteries)*: Check the fluid level in each cell. The fluid should be at the bottom of the filler opening.

Vehicles operated in high temperatures or under severe conditions require frequent checks of the 12–volt battery fluid level.

NOTE:
Care should be taken to avoid situations that can lead to potential battery discharge and potential no-start conditions such as:

1. **Installation or extended use of electronic accessories that consume battery power when the EV system is not running (Phone chargers, GNSS, DVD players, etc.)**
2. **Vehicle is not driven regularly and/or only driven short distances.**

In these cases, the battery may need to be charged to maintain battery health.

Brake fluid level*: Make sure that the brake fluid levels are between the MAX and MIN lines on the reservoir.

Coolant level*: Check the coolant level when the high voltage parts are cold. Make sure that the coolant level is between the MAX and MIN lines on the reservoir.

Fluid leaks: Check under the vehicle for water or other fluid leaks after the vehicle has been parked for a while. Water dripping from the air conditioner after use is normal. If you should notice any leaks, check for cause and have it corrected immediately.

Radiator and hoses: Check the front of the radiator and clean off any dirt, insects, leaves, etc., that may have accumulated. Make sure the hoses have no cracks, deformation, rot or loose connections.

Underbody: The underbody is frequently exposed to corrosive substances such as those used on icy roads or to control dust. It is very important to remove these substances, otherwise rust will form on the floor pan and frame. At the end of winter, the underbody should be thoroughly flushed with plain water, being careful to clean those areas where mud and dirt may accumulate. For additional information, see "Cleaning exterior" (P.506).

Windshield washer fluid*: Check that there is an adequate amount of fluid in the reservoir.

EXPLANATION OF SCHEDULED MAINTENANCE ITEMS

BASIC INFORMATION

The following descriptions are provided to give you a better understanding of the scheduled maintenance items that should be regularly checked or replaced. The maintenance schedule indicates at which mileage/time intervals each item requires service.

In addition to scheduled maintenance, your vehicle requires that some items be checked during normal day-to-day operation. For additional information, see "General maintenance" (P.542).

Items marked with "*" are recommended by NISSAN for reliable vehicle operation. You are not required to perform maintenance on these items in order to maintain the warranties which come with your NISSAN. Other maintenance items and intervals are required.

When applicable, additional information can be found in the "Do-it-yourself" section.

EXPLANATION OF SCHEDULED MAINTENANCE ITEMS

Charging Port: Check the charging port for any signs of contamination, dust, sand etc.

Charging Port Rubber Cap: Use only compressed air with proper eye protection to clean any contamination from the sealing cap.

Coolant: Replace coolant at the interval specified below. When adding or replacing coolant, be sure to use only Genuine NISSAN Long Life Antifreeze/Coolant (Blue) or equivalent with the proper mixture. (Refer to the Owner's Manual to determine the proper mixture for your area.) The recommended service interval of the factory fill coolant is 125,000 miles (200,000 km) or 15 years, whichever comes first. Subsequent replacement of Genuine NISSAN Long Life Antifreeze/Coolant (Blue) should occur every 75,000 miles (120,000 km) or 5 years, whichever comes first.

NOTE:
Mixing any other type of coolant or the use of nondistilled water will reduce the recommended service interval of the coolant.

CHASSIS AND BODY MAINTENANCE

Brake lines:

Visually inspect for proper installation. Check for chafing, cracks, deterioration, and signs of leaking. Replace any deteriorated or damaged parts immediately.

Brake pads and rotors:

Check for wear, deterioration and fluid

leaks. Replace any deteriorated or damaged parts immediately.

In-cabin microfilter:

Replace at specified intervals. When driving for prolonged periods in dusty conditions, replace the filter more frequently.

Steering gear and linkage, axle and suspension parts, drive shaft boots:

Check for damage, looseness, and leakage of oil or grease. Under severe driving conditions, inspect more frequently.

Tire rotation:

Rotate tires at the specified interval shown in the maintenance schedule. When rotating tires, check for damage and uneven wear. Replace if necessary.

Gear box:

Visually inspect for signs of leakage at specified intervals.

BASIC INFORMATION

To help ensure smooth, safe and economical driving, NISSAN provides two maintenance schedules that may be used, depending upon the conditions in which you usually drive. These schedules contain both distance and time intervals, up to 120,000 miles (192,000 km)/96 months. For most people, the odometer reading will indicate when service is needed. However, if you drive very little, your vehicle should be serviced at the regular time intervals shown in the schedule.

After 120,000 miles (192,000 km)/96 months, continue maintenance at the same mileage/time intervals.

ADDITIONAL MAINTENANCE ITEMS FOR SEVERE OPERATING CONDITIONS

Additional maintenance items for severe operating conditions; should be performed on vehicles that are driven under especially demanding conditions. Additional maintenance items should be performed if you primarily operate your vehicle under the following conditions:

- Repeated short trips of less than 5 miles (8 km).
- Repeated short trips of less than 10 miles (16 km) with outside temperatures remaining below freezing.
- Operating in hot weather in stop-and-go “rush hour” traffic.
- Low speed driving for long distances, such as police, taxi or door-to-door delivery use.
- Driving in dusty conditions.
- Driving on rough, muddy or salt spread roads.
- Using a car-top carrier.

If your vehicle is mainly operated under the severe conditions, follow the severe use maintenance intervals shown in the maintenance schedule.

EV MAINTENANCE SCHEDULES (YM52 electric motor)

Basic information

The following shows the maintenance schedule. Choose the maintenance schedule needed based on your vehicle driving conditions.

After 120,000 miles (192,000 km)/96 months, continue maintenance at the same mileage/time interval.

Maintenance schedules

7,500 miles/(12,000 km)/ 6 months

Perform at number of miles, kilometers or months, whichever comes first.

Standard maintenance:

Inspections:

- Charging port
- Charging port rubber cap

Essential:

- Tire rotation

Severe use maintenance:

Inspections:

- Axle & suspension parts
- Brake pads & rotors
- Drive shaft boots
- Steering gear and linkage

15,000 miles/(24,000 km)/ 12 months

Perform at number of miles, kilometers or months, whichever comes first.

Standard maintenance:

Inspections:

- Brake lines
- Brake pads & rotors
- Charging port
- Charging port rubber cap
- Cooling system
- Drive shaft boots
- Gear box oil
- Intelligent Key battery *(1)

Essential:

- Replace in-cabin microfilter
- Tire rotation

Severe use maintenance:

Inspections:

- Axle & suspension parts
- Steering gear and linkage
- Brake pads & rotors
- Drive shaft boots

Essential:

- Replace brake fluid

* Maintenance items and intervals with "*" are recommended by NISSAN for reliable vehicle operation. The owner need not perform such maintenance in order to maintain the emission warranty or manufacturer recall liability. Other maintenance items and intervals are required.

(1) Performed based on the number of service months only.

22,500 miles/(36,000 km)/ 18 months

Perform at number of miles, kilometers or months, whichever comes first.

Standard maintenance:

Inspections:

- Charging port
- Charging port rubber cap

Essential:

- Tire rotation

Severe use maintenance:

Inspections:

- Axle & suspension parts
- Brake pads & rotors
- Drive shaft boots
- Steering gear and linkage

30,000 miles/(48,000 km)/ 24 months

Perform at number of miles, kilometers or months, whichever comes first.

Standard maintenance:

Inspections:

- Axle & suspension parts
- Brake lines
- Brake pads & rotors
- Charging port
- Charging port rubber cap
- Cooling system
- Drive shaft boots
- Gear box oil
- Steering gear and linkage

Essential:

- Replace brake fluid
- Replace in-cabin microfilter
- Replace Intelligent Key battery *(1)
- Tire rotation

Severe use maintenance:

Inspections:

- Axle & suspension parts
- Steering gear and linkage
- Brake pads & rotors
- Drive shaft boots

* Maintenance items and intervals with "*" are recommended by NISSAN for reliable vehicle operation. The owner need not perform such maintenance in order to maintain the emission warranty or manufacturer recall liability. Other maintenance items and intervals are required.

(1) Performed based on the number of service months only.

37,500 miles/(60,000 km)/ 30 months

Perform at number of miles, kilometers or months, whichever comes first.

Standard maintenance:

Inspections:

- Charging port
- Charging port rubber cap

Essential:

- Tire rotation

Severe use maintenance:

Inspections:

- Axle & suspension parts
- Brake pads & rotors
- Drive shaft boots
- Steering gear and linkage

45,000 miles/(72,000 km)/ 36 months

Perform at number of miles, kilometers or months, whichever comes first.

Standard maintenance:

Inspections:

- Brake lines
- Brake pads & rotors
- Charging port
- Charging port rubber cap
- Cooling system
- Drive shaft boots
- Gear box oil

Essential:

- Replace Intelligent key battery *(1)
- Replace in-cabin microfilter
- Tire rotation

Severe use maintenance:

Inspections:

- Axle & suspension parts
- Steering gear and linkage
- Brake pads & rotors
- Drive shaft boots

Essential:

- Replace brake fluid

* Maintenance items and intervals with "*" are recommended by NISSAN for reliable vehicle operation. The owner need not perform such maintenance in order to maintain the emission warranty or manufacturer recall liability. Other maintenance items and intervals are required.

(1) Performed based on the number of service months only.

52,500 miles/(84,000 km)/ 42 months

Perform at number of miles, kilometers or months, whichever comes first.

Standard maintenance:

Inspections:

- Charging port
- Charging port rubber cap

Essential:

- Tire rotation

Severe use maintenance:

Inspections:

- Axle & suspension parts
- Brake pads & rotors
- Drive shaft boots
- Steering gear and linkage

60,000 miles/(96,000 km)/ 48 months

Perform at number of miles, kilometers or months, whichever comes first.

Standard maintenance:

Inspections:

- Axle & suspension parts
- Brake lines
- Brake pads & rotors
- Charging port
- Charging port rubber cap
- Cooling system
- Drive shaft boots
- Gear box oil
- Steering gear and linkage

Essential:

- Replace brake fluid
- Replace in-cabin microfilter
- Replace Intelligent Key battery *(1)
- Tire rotation

Severe use maintenance:

Inspections:

- Axle & suspension parts
- Steering gear and linkage
- Brake pads & rotors
- Drive shaft boots

Essential:

- Replace brake fluid

* Maintenance items and intervals with "*" are recommended by NISSAN for reliable vehicle operation. The owner need not perform such maintenance in order to maintain the emission warranty or manufacturer recall liability. Other maintenance items and intervals are required.

(1) Performed based on the number of service months only.

67,500 miles/(108,000 km)/ 54 months

Perform at number of miles, kilometers or months, whichever comes first.

Standard maintenance:

Inspections:

- Charging port
- Charging port rubber cap

Essential:

- Tire rotation

Severe use maintenance:

Inspections:

- Axle & suspension parts
- Brake pads & rotors
- Drive shaft boots
- Steering gear and linkage

75,000 miles/(120,000 km)/ 60 months

Perform at number of miles, kilometers or months, whichever comes first.

Standard maintenance:

Inspections:

- Brake lines
- Brake pads & rotors
- Charging port
- Charging port rubber cap
- Cooling system
- Drive shaft boots
- Gear box oil

Essential:

- Replace in-cabin microfilter
- Replace Intelligent Key battery *(1)
- Tire rotation

Severe use maintenance:

Inspections:

- Axle & suspension parts
- Steering gear and linkage
- Brake pads & rotors
- Drive shaft boots

Essential:

- Replace brake fluid

* Maintenance items and intervals with "*" are recommended by NISSAN for reliable vehicle operation. The owner need not perform such maintenance in order to maintain the emission warranty or manufacturer recall liability. Other maintenance items and intervals are required.

(1) Performed based on the number of service months only.

82,500 miles/(132,000 km)/ 66 months

Perform at number of miles, kilometers or months, whichever comes first.

Standard maintenance:

Inspections:

- Charging port
- Charging port rubber cap

Essential:

- Tire rotation

Severe use maintenance:

Inspections:

- Axle & suspension parts
- Brake pads & rotors
- Drive shaft boots
- Steering gear and linkage

90,000 miles/(144,000 km)/ 72 months

Perform at number of miles, kilometers or months, whichever comes first.

Standard maintenance:

Inspections:

- Axle & suspension parts
- Brake lines
- Brake pads & rotors
- Charging port
- Charging port rubber cap
- Cooling system
- Drive shaft boots
- Front suspension ball joints
- Gear box oil
- Steering gear and linkage
- Steering linkage ball joints

Essential:

- Replace Intelligent key battery *(1)
- Replace brake fluid
- Replace in-cabin microfilter
- Tire rotation

Severe use maintenance:

Inspections:

- Axle & suspension parts
- Steering gear and linkage
- Brake pads & rotors
- Drive shaft boots

Essential:

- Replace brake fluid

* Maintenance items and intervals with "*" are recommended by NISSAN for reliable vehicle operation. The owner need not perform such maintenance in order to maintain the emission warranty or manufacturer recall liability. Other maintenance items and intervals are required.

(1) Performed based on the number of service months only.

97,500 miles/(156,000 km)/ 78 months

Perform at number of miles, kilometers or months, whichever comes first.

Standard maintenance:

Inspections:

- Charging port
- Charging port rubber cap

Essential:

- Tire rotation

Severe use maintenance:

Inspections:

- Axle & suspension parts
- Brake pads & rotors
- Drive shaft boots
- Steering gear and linkage

105,000 miles/(168,000 km)/ 84 months

Perform at number of miles, kilometers or months, whichever comes first.

Standard maintenance:

Inspections:

- Brake lines
- Brake pads & rotors
- Charging port
- Charging port rubber cap
- Cooling system
- Drive shaft boots
- Gear box oil

Essential:

- Replace in-cabin microfilter
- Replace Intelligent Key battery *(1)
- Tire rotation

Severe use maintenance:

Inspections:

- Axle & suspension parts
- Steering gear and linkage
- Brake pads & rotors
- Drive shaft boots

Essential:

- Replace brake fluid

* Maintenance items and intervals with "*" are recommended by NISSAN for reliable vehicle operation. The owner need not perform such maintenance in order to maintain the emission warranty or manufacturer recall liability. Other maintenance items and intervals are required.

(1) Performed based on the number of service months only.

112,500 miles/(180,000 km)/ 90 months

Perform at number of miles, kilometers or months, whichever comes first.

Standard maintenance:

Inspections:

- Charging port
- Charging port rubber cap

Essential:

- Tire rotation

Severe use maintenance:

Inspections:

- Axle & suspension parts
- Brake pads & rotors
- Drive shaft boots
- Steering gear and linkage

120,000 miles/(192,000 km)/ 96 months

Perform at number of miles, kilometers or months, whichever comes first.

Standard maintenance:

Inspections:

- Axle & suspension parts
- Brake lines
- Brake pads & rotors
- Charging port
- Charging port rubber cap
- Cooling system
- Drive shaft boots
- Gear box oil
- Steering gear and linkage

Essential:

- Replace brake fluid
- Replace in-cabin microfilter
- Replace Intelligent Key battery *(1)
- Tire rotation

Severe use maintenance:

Inspections:

- Axle & suspension parts
- Steering gear and linkage
- Brake pads & rotors
- Drive shaft boots

Essential:

- Replace brake fluid

* Maintenance items and intervals with "*" are recommended by NISSAN for reliable vehicle operation. The owner need not perform such maintenance in order to maintain the emission warranty or manufacturer recall liability. Other maintenance items and intervals are required.

(1) Performed based on the number of service months only.

ADDITIONAL INFORMATION

NOTE FOR Cooling system coolant
First replacement interval is 125,000 miles (200,000 km) or 15 years. After first replacement, replace every 75,000 miles (120,000 km) or 60 months.

MEMO

10 Technical and consumer information

Recommended fluids/lubricants and capacities 558
- Basic information 558
- Cooling system coolant 558
- Gear box oil 558
- Brake fluid 558
- Multi-purpose grease 558
- Air conditioning system refrigerant 558
- Air conditioning system lubricants 558
- Windshield washer fluid (US) 558
- Windshield washer fluid (Canada) 558
- Air conditioning system refrigerant and lubricant recommendations 558

Specifications 560
- Charging system 560
- Motor 560
- Wheels and tires 561
- Dimensions 562

When traveling or registering in another country 562

Vehicle identification 563
- Vehicle Identification Number (VIN) plate 563
- Traction motor serial number 563
- F.M.V.S.S./C.M.V.S.S. certification label 563
- Tire and Loading Information label 564
- Air conditioner specification label 564

Installing front license plate 565

Vehicle loading information 566
- Basic information 566
- Terms 566
- Vehicle load capacity 566
- Securing the load 568
- Loading tips 569
- Measurement of weights 569

Towing a trailer 570

Flat towing 570

Uniform tire quality grading 571

Reporting safety defects 572

Emission control system warranty 573

Event Data Recorders (EDR) 573
- Basic information 573
- Additional data recording 574

Nissan software license 575

Owner's manual/service manual order information 575

RECOMMENDED FLUIDS/LUBRICANTS AND CAPACITIES

BASIC INFORMATION

The following are approximate capacities. The actual refill capacities may be slightly different. When refilling, follow the procedure described in the "Do-it-yourself" section to determine the proper refill capacity.

COOLING SYSTEM COOLANT

- Pre-diluted Genuine NISSAN Long Life Antifreeze/Coolant (blue) or equivalent

Models with water heating PTC heater	Metric Measure	8.8 L
	US Measure	9-1/4 qt
	Imperial Measure	7-3/4 qt
Models without water heating PTC heater	Metric Measure	8.6 L
	US Measure	9-1/8 qt
	Imperial Measure	7-5/8 qt

GEAR BOX OIL

Gear box oil

- Genuine NISSAN Matic S ATF
- Using reduction gear oil other than Genuine NISSAN Matic S ATF will cause deterioration in drivability and reduction gear durability, and may damage the reduction gear, which is not covered by the NISSAN's New Vehicle Limited Warranty.

BRAKE FLUID

Brake fluid

- Genuine NISSAN Super Heavy Duty Brake Fluid* or equivalent DOT 3

  *: Available in mainland U.S.A. through a NISSAN certified LEAF dealer.

Refill to the proper level according to the instructions, see "Brake fluid" (P.519).

MULTI-PURPOSE GREASE

Multi-purpose grease

- NLGI No. 2 (Lithium soap base)

AIR CONDITIONING SYSTEM REFRIGERANT

Air conditioning system refrigerant

- HFO-1234yf (R-1234yf)
- For additional information, see "Air conditioner specification label" (P.564).

AIR CONDITIONING SYSTEM LUBRICANTS

Air conditioning system lubricants

- NISSAN A/C System Oil ND-OIL11 or equivalent.

WINDSHIELD WASHER FLUID (US)

Windshield washer fluid (US)

- Genuine NISSAN Windshield Washer Concentrate Cleaner & Antifreeze fluid or equivalent

Metric Measure	2.5 L
US Measure	5/8 gal
Imperial Measure	1/2 gal

WINDSHIELD WASHER FLUID (Canada)

Windshield washer fluid (Canada)

- Genuine NISSAN Windshield Washer Concentrate Cleaner & Antifreeze fluid or equivalent

Metric Measure	4.2 L
US Measure	1–1/8 gal
Imperial Measure	7/8 gal

AIR CONDITIONING SYSTEM REFRIGERANT AND LUBRICANT RECOMMENDATIONS

The air conditioning system in your NISSAN vehicle must be charged with the refrigerant, HFO-1234yf (R-1234yf), and the compressor oil, ND-OIL11 or the equivalent.

CAUTION

The use of any other refrigerant or oil will cause severe damage to the air conditioning system and will require the replacement of all air conditioner system components.

The refrigerant, HFO-1234yf (R-1234yf), in your NISSAN vehicle will not harm the earth's ozone layer. Although this refrigerant does not affect the earth's atmosphere, certain governmental regulations require the recovery and recycling of any refrigerant during automotive air conditioning system service. Air conditioner system should only be serviced by trained and certified technicians to ensure proper and safe operation (SAE J2845). A NISSAN certified LEAF dealer has the trained technicians and equipment needed to recover and recycle your air conditioner system refrigerant. Only new and SAE J2842 certified evaporator(s) or inner condenser (if so equipped) shall be used as replacement parts.

A damaged or leaking air conditioning evaporator or inner condenser (if so equipped) shall never be repaired or replaced with one removed from a used or salvaged vehicle. To replace a damaged or leaking evaporator or inner condenser (if so equipped), use only new and SAE J2842 certified evaporator(s). It is recommended that you visit a NISSAN certified LEAF dealer when servicing your air conditioner system.

SPECIFICATIONS

CHARGING SYSTEM

Rated input voltage	AC120V, 240V (single phase)
Rated input frequency	60Hz
Maximum rated current	30A
Charging modes / Type of connection	Mode 2 / Case B (Normal charge with NISSAN Genuine portable type EVSE - if so equipped) Mode 3 / Case B/C (Normal charge with public charging station, etc.) Mode 4 / Case C (DC Fast Charge)
Required installation (over current protection)	The methods of protection against over current and over voltage shall be in accordance with national codes. Suitable over current protection devices for the wiring of houses or buildings shall be installed.
IP Degree	IP44: When the NISSAN EVSE (if so equipped) is connected to the normal charge port.
Operating temperature	Same as vehicle operating temperature
Storage temperature	Same as vehicle storage temperature
Altitude	Up to 9,843 ft (3,000 m)
Applicable standard	SAE J1772 SAE J3400 EN61851-1 EN61851-21 IEC61851-1 IEC61851-21 EN61000-6-1 EN61000-6-3
Adapters	Do not use an extension cable or electrical adapter except for Genuine NISSAN Adapter (if so equipped) or exchangeable plug (if so equipped).

MOTOR

Model	YM52

WHEELS AND TIRES

Road wheel

Type: Conventional		
Size	Offset Metric measure	Offset US measure
18 x 6.5J (Steel wheel)	45 mm	1.77 in
18 x 7J (Alloy wheel)	50 mm	1.97 in
19 x 7.5J	50 mm	1.97 in

Tire

Type: Conventional		
Size	Pressure PSI [Cold]	Pressure kPa [Cold]
215/55R18	36 (Alloy wheel) 46 (Steel wheel)	250 (Alloy wheel) 320 (Steel wheel)
235/45R19	38	260

DIMENSIONS

	Metric measure	US measure
Overall length	4,405 mm	173.4 in
Overall width (not including mirrors)	1,810 mm	71.3 in
Overall height	1,557 mm	61.3 in
Front tread	1,574 mm*1 1,584 mm*2	62.0 in*1 62.4 in*2
Rear tread	1,567 mm*1 1,577 mm*2	61.7 in*1 62.1 in*2
Wheelbase	2,690 mm	105.9 in
Gross Vehicle Weight Rating (GVWR)		
Gross Axle Weight Rating (GAWR)	See the F.M.V.S.S. or C.M.V.S.S. certification label on the driver's side center pillar.	
Front		
Rear		

*1: 19 inch and 18 inch alloy wheel models

*2: 18 inch steel wheel models

WHEN TRAVELING or REGISTERING IN ANOTHER COUNTRY

When planning to travel in another country, you should first find out if the charging equipment is compatible with that country's electrical system.

When transferring the registration of your vehicle to another country, state, province or district, it may be necessary to modify the vehicle to meet local laws and regulations.

The laws and regulations for motor vehicle safety standards vary according to the country, state, province or district; therefore, vehicle specifications may differ.

When any vehicle is to be taken into another country, state, province or district and registered, its modifications, transportation, and registration are the responsibility of the user. NISSAN is not responsible for any inconvenience that may result.

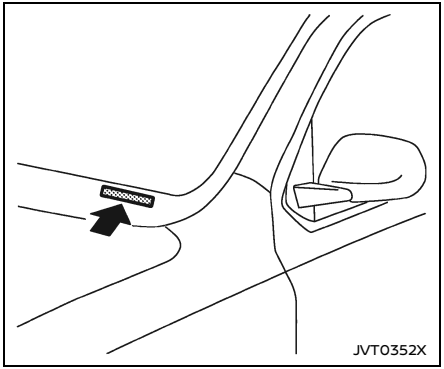

VEHICLE IDENTIFICATION NUMBER (VIN) PLATE

The vehicle identification number plate is attached as shown. This number is the identification for your vehicle and is used in the vehicle registration.

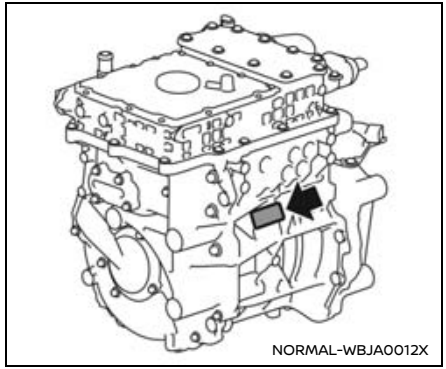

TRACTION MOTOR SERIAL NUMBER

The serial number of the traction motor is stamped on the traction motor as shown.

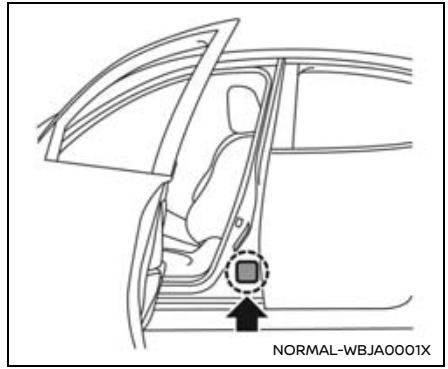

F.M.V.S.S./C.M.V.S.S. CERTIFICATION LABEL

The Federal/Canadian Motor Vehicle Safety Standards (F.M.V.S.S./C.M.V.S.S.) certification label is affixed as shown. This label contains valuable vehicle information, such as: Gross Vehicle Weight Ratings (GVWR), Gross Axle Weight Rating (GAWR), month and year of manufacture, Vehicle Identification Number (VIN), etc. Review it carefully.

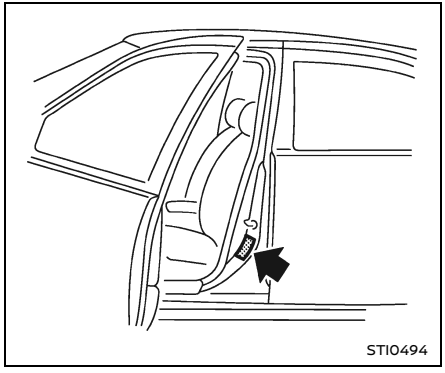

TIRE AND LOADING INFORMATION LABEL

The cold tire pressure is shown on the Tire and Loading Information label affixed to the pillar as shown.

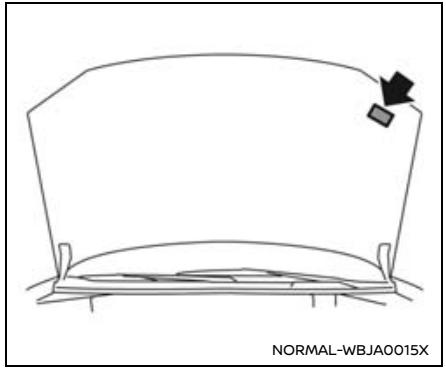

AIR CONDITIONER SPECIFICATION LABEL

The air conditioner specification label is affixed to the underside of the hood as shown.

Air conditioner specification label symbols:		
Symbol Name	Reference	Graphic
Caution	ISO 7000 0434	
Air Conditioning System (MAC)	ISO 2575 D01	
MAC System Lubricant Type (PAG–POE)		
Requires Registered Technician to Service MAC System		
Flammable Refrigerant		

INSTALLING FRONT LICENSE PLATE

To install the front license plate bracket to your vehicle, it is recommended that you visit a NISSAN certified LEAF dealer for this service.

WARNING

Please ensure that the front radar sensor is unobstructed or blocked by large license plates or vanity plates. Blocking this sensor can prevent the sensor from detecting objects properly and may cause a malfunction warning to appear. If the malfunction warning appears, some Driver Assistance systems will not function. If this happens an accident could occur resulting in personal injury or death.

VEHICLE LOADING INFORMATION

BASIC INFORMATION

⚠ WARNING

- **It is extremely dangerous to ride in a cargo area inside the vehicle. In a collision, people riding in these areas are more likely to be seriously injured or killed.**
- **Do not allow people to ride in any area of your vehicle that is not equipped with seats and seat belts.**
- **Be sure everyone in your vehicle is in a seat and using a seat belt properly.**

TERMS

It is important to familiarize yourself with the following terms before loading your vehicle:

- Curb Weight (actual weight of your vehicle) - vehicle weight including: standard and optional equipment, fluids, emergency tools, and spare tire assembly. This weight **does not** include passengers and cargo.
- GVW (Gross Vehicle Weight) - curb weight plus the combined weight of passengers and cargo.
- GVWR (Gross Vehicle Weight Rating) - maximum total combined weight of the unloaded vehicle, passengers, cargo, hitch, trailer tongue load and any other optional equipment. This information is located on the F.M.V.S.S./C.M.V.S.S. label.
- GAWR (Gross Axle Weight Rating) - maximum weight (load) limit specified for the front or rear axle. This information is located on the F.M.V.S.S./C.M.V.S.S. label.
- GCWR (Gross Combined Weight Rating) - The maximum total weight rating of the vehicle, passengers, cargo, and trailer.
- Vehicle Capacity Weight, Load limit, Total load capacity - maximum total weight limit specified of the load (passengers and cargo) for the vehicle. This is the maximum combined weight of occupants and cargo that can be loaded into the vehicle. If the vehicle is used to tow a trailer, the trailer tongue weight must be included as part of the cargo load. This information is located on the Tire and Loading Information label.
- Cargo capacity - permissible weight of cargo, the subtracted weight of occupants from the load limit.

VEHICLE LOAD CAPACITY

Basic information

Do not exceed the load limit of your vehicle shown as “The combined weight of occupants and cargo” on the Tire and Loading Information label. Do not exceed the number of occupants shown as “Seating Capacity” on the Tire and Loading Information label.

To get “the combined weight of occupants and cargo”, add the

weight of all occupants, then add the total luggage weight. Examples are shown in the following illustration.

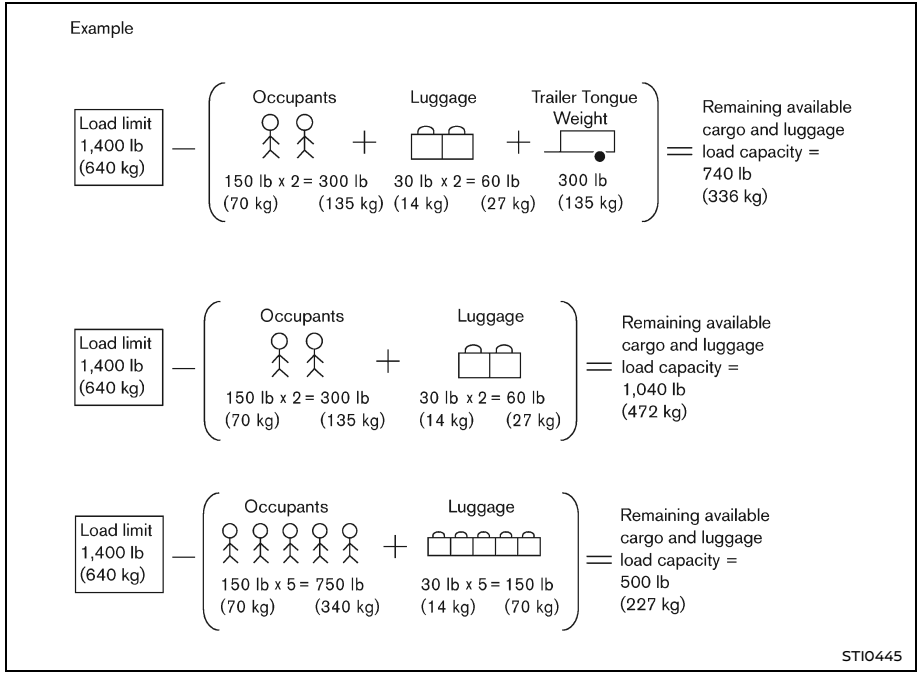

1. Locate the statement "The combined weight of occupants and cargo should never exceed XXX kg or XXX lbs" on your vehicle's placard.

2. Determine the combined weight of the driver and passengers that will be riding in your vehicle.
3. Subtract the combined weight of the driver and passengers from XXX kg or XXX lbs.
4. The resulting figure equals the available amount of cargo and luggage load capacity. For example, if the XXX amount equals 1400 lbs. and there will be five 150 lb. passengers in your vehicle, the amount of available cargo and luggage load capacity is 650 lbs. (1400 – 750 (5 x 150) = 650 lbs)
5. Determine the combined weight of luggage and cargo being loaded on the vehicle. That weight may not safely exceed the available cargo and luggage load capacity calculated in Step 4.
6. If your vehicle will be towing a trailer, load from your trailer will be transferred to your vehicle. Consult this manual to determine how this reduces the available cargo and luggage load capacity of your vehicle.

Steps For Determining Correct Load Limit

For 2WD models:

Towing a trailer with a vehicle that is not intended for towing may result in an accident involving injury or death.

WARNING

Do not tow a trailer with your vehicle. Towing a trailer may result in an accident involving injury or death.

Before driving a loaded vehicle, confirm that you do not exceed the Gross Vehicle Weight Rating (GVWR) or the Gross Axle Weight Rating (GAWR) for your vehicle. (See "Measurement of weights" (P.569).)

Also check tires for proper inflation pressures. See the Tire and Loading Information label.

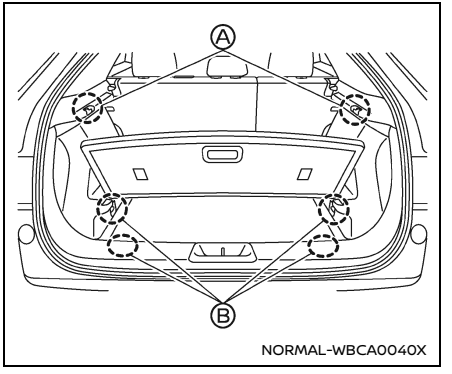

SECURING THE LOAD

There are luggage hooks located in the cargo area as shown. Hooks Ⓑ are located under the rear floor board. The hooks can be used to secure cargo with ropes or other types of straps.

Do not apply a total load of more than 11 lbs. (5 kg) Ⓐ or 22 lbs. (10 kg) Ⓑ to a single hook when securing cargo.

WARNING

- **Properly secure all cargo with ropes or straps to help prevent it from sliding or shifting. Do not place cargo higher than the seatbacks. In a sudden stop or collision, unsecured cargo could cause personal injury.**
- **The child restraint top tether strap may be damaged by contact with items in the cargo area. Secure any items in the cargo area. Your child could be seriously injured or killed in a collision if the top tether strap is damaged.**
- **Do not load your vehicle any heavier than the GVWR or the maximum front and rear GAWRs. If you do, parts of your vehicle can break, tire damage could occur, or it can change the way your vehicle handles. This could result in loss of control and cause personal injury.**

LOADING TIPS

- The GVW must not exceed GVWR or GAWR as specified on the F.M.V.S.S./C.M.V.S.S. certification label.
- Do not load the front and rear axle to the GAWR. Doing so will exceed the GVWR.

WARNING

- **Properly secure all cargo with ropes or straps to help prevent it from sliding or shifting. Do not place cargo higher than the seatbacks. In a sudden stop or collision, unsecured cargo could cause personal injury.**
- **Do not load your vehicle any heavier than the GVWR or the maximum front and rear GAWRs. If you do, parts of your vehicle can break, tire damage could occur, or it can change the way your vehicle handles. This could result in loss of control and cause personal injury.**
- **Overloading not only can shorten the life of your vehicle and the tire, but can cause unsafe vehicle handling and longer braking distances. This may cause a premature tire failure, which could result in a serious accident and personal injury. Failures caused by overloading are not covered by the vehicle's warranty.**

MEASUREMENT OF WEIGHTS

Secure loose items to prevent weight shifts that could affect the balance of your vehicle. When the vehicle is loaded, drive to a scale and weigh the front and the rear wheels separately to determine axle loads. Individual axle loads should not exceed either of the Gross Axle Weight Ratings (GAWR). The total of the axle loads should not exceed the Gross Vehicle Weight Rating (GVWR). These ratings are given on the vehicle certification label. If weight ratings are

exceeded, move or remove items to bring all weights below the ratings.

TOWING A TRAILER

WARNING

Do not tow a trailer. Serious damage could occur to your EV system, axle or other parts, and may lead to a collision, which could result in serious personal injury or death.

FLAT TOWING

Towing your vehicle with all four wheels on the ground is sometimes called flat towing, dinghy towing or 4 down towing. This method is typically used when towing a vehicle behind a recreational vehicle, such as a motor home.

CAUTION

- **Failure to follow these guidelines can result in severe reduction gear damage.**
- **DO NOT tow this vehicle with all four wheels on the ground (flat towing).**
- **For emergency towing procedures see "Towing your vehicle" (P.501).**

NOTE:
If the Li-ion battery becomes completely discharged:

- **The vehicle is automatically placed in the ON position and it will not be possible to switch to the READY to drive position.**
- **The vehicle is automatically switched to the N (Neutral) position and it will not be possible to drive the vehicle.**

For additional information, see "If the Li-ion battery becomes completely discharged" (P.500).

DOT (Department Of Transportation) Quality Grades: All passenger car tires must conform to federal safety requirements in addition to these grades.

Quality grades can be found where applicable on the tire sidewall between tread shoulder and maximum section width. For example:

Treadwear 200 Traction AA Temperature A

Treadwear

The treadwear grade is a comparative rating based on the wear rate of the tire when tested under controlled conditions on a specified government test course. For example, a tire graded 150 would wear one and one-half (1 1/2) times as well on the government course as a tire graded 100. The relative performance of tires depends upon actual conditions of their use, however, and may depart significantly from the norm due to variations in driving habits, service practices and differences in road characteristics and climate.

Traction AA, A, B and C

The traction grades, from highest to lowest, are AA, A, B and C. Those grades represent the tire's ability to stop on wet pavement as measured under controlled conditions on specified government test surfaces of asphalt and concrete. A tire marked C may have poor traction performance.

WARNING

The traction grade assigned to this tire is based on straight-ahead braking traction tests, and does not include acceleration, cornering, hydroplaning, or peak traction characteristics.

Temperature A, B and C

The temperature grades A (the highest), B, and C, representing the tire's resistance to the generation of heat and its ability to dissipate heat when tested under controlled conditions on a specified indoor laboratory test wheel. Sustained high temperature can cause the material of the tire to degenerate and reduce tire life, and excessive temperature can lead to sudden tire failure. The grade C corresponds to a level of performance which all passenger car tires must meet under the Federal Motor Vehicle Safety Standard No. 109. Grades B and A represent higher levels of performance on the laboratory test wheel than the minimum required by law.

WARNING

The temperature grade for this tire is established for a tire that is properly inflated and not overloaded. Excessive speed, under-inflation, or excessive loading, either separately or in combination, can cause heat build-up and possible tire failure.

For USA

If you believe that your vehicle has a defect which could cause a crash or could cause injury or death, you should immediately inform the National Highway Traffic Safety Administration (NHTSA) in addition to notifying NISSAN.

If NHTSA receives similar complaints, it may open an investigation, and if it finds that a safety defect exists in a group of vehicles, it may order a recall and remedy campaign. However, NHTSA cannot become involved in individual problems between you, your dealer, or NISSAN.

To contact NHTSA, you may call the Vehicle Safety Hotline toll-free at 1-888-327-4236 (TTY: 1-888-275-9171); go to http://www.safercar.gov; or write to: Administrator, NHTSA, 1200 New Jersey Avenue,SE., Washington, D.C. 20590. You can also obtain other information about motor vehicle safety from http://www.safercar.gov.

You may notify NISSAN by contacting our Consumer Affairs Department, toll-free, at 1-800-NISSAN-1.

For Canada

If you believe that your vehicle has a defect which could cause a crash or could cause injury or death, you should immediately inform Transport Canada in addition to notifying NISSAN.

If Transport Canada receives complaints, it may open an investigation, and if it finds that a safety defect exists in a group of vehicles, it may request that NISSAN conduct a recall campaign. However, Transport Canada cannot become involved in individual problems between you, your dealer, or NISSAN.

You may contact Transport Canada's Defect Investigations and Recalls Division toll free at 1-800-333-0510. You may also report safety defects online at:

http://www.tc.gc.ca/eng/motorvehiclesafety/menu.htm (English

speakers) or http://www.tc.gc.ca/fra/securiteautomobile/menu.htm (French speakers) Or contact Transport Canada by mail at: Transport Canada Motor Vehicle Safety Investigations Laboratory 80 Noel Street Gatineau, QC J8Z0A1

Additional information concerning motor vehicle safety may be obtained from Transport Canada's Road Safety Information Centre at 1-800-333-0371 or online at www.tc.gc.ca/roadsafety (English speakers) or www.tc.gc.ca/securiteroutiere (French speakers).

To notify NISSAN of any safety concerns please contact our Consumer Information Centre toll free at 1-800-387-0122.

EMISSION CONTROL SYSTEM WARRANTY

Your vehicle is covered by the following emission warranties.

For USA:

- Emission Defects Warranty
- Emissions Performance Warranty

Details of these warranties may be found with other vehicle warranties in your Warranty Information Booklet which comes with your vehicle. If you did not receive a Warranty Information Booklet, or it has become lost, you may obtain a replacement by writing to:

- Nissan North America, Inc.
  Consumer Affairs Department
  P.O. Box 685003
  Franklin, TN 37068-5003

For Canada:

Emission Control System Warranty

Details of this warranty may be found with other vehicle warranties in your Warranty Information Booklet which comes with your vehicle. If you did not receive a Warranty Information Booklet, or it has become lost, you may obtain a replacement by writing to:

- Nissan Canada Inc.
  5290 Orbitor Drive
  Mississauga, Ontario,
  L4W 4Z5

EVENT DATA RECORDERS (EDR)

BASIC INFORMATION

This vehicle is equipped with an Event Data Recorder (EDR). The main purpose of an EDR is to record, in certain crash or near crash-like situations, such as an air bag deployment or hitting a road obstacle, data that will assist in understanding how a vehicle's systems performed. The EDR is designed to record data related to vehicle dynamics and safety systems for a short period of time, typically 30 seconds or less. The EDR in this vehicle is designed to record such data as:

- How various systems in your vehicle were operating;
- Whether or not the driver and passenger safety belts were buckled/fastened;
- How far (if at all) the driver was depressing the accelerator and/or brake pedal; and,
- How fast the vehicle was traveling.
- Sounds are not recorded.

These data can help provide a better understanding of the circumstances in which crashes and injuries occur.

NOTE: EDR data are recorded by your vehicle only if a nontrivial crash situation occurs; no data are recorded by the EDR under normal driving conditions and no personal data (e.g. name, gender, age and

crash location) are recorded. However, other parties, such as law enforcement, could combine the EDR data with the type of personally identifying data routinely acquired during a crash investigation.

To read data recorded by an EDR, special equipment is required and access to the vehicle or the EDR is needed. In addition to the vehicle manufacturer and NISSAN certified LEAF dealer, other parties, such as law enforcement, that have the special equipment, can read the information if they have access to the vehicle or the EDR. EDR data will only be accessed with the consent of the vehicle owner or lessee or as otherwise required or permitted by law.

ADDITIONAL DATA RECORDING

If your vehicle is equipped with one of the optional ProPILOT Assist systems, it will also be equipped with supplemental data recording functionality intended to assist in understanding how ProPILOT Assist performs in certain nontrivial crash or near-crash scenarios. The ProPILOT Assist systems do not record conversations, sounds, or images of inside of the vehicle.

Supplemental recording is designed to capture items such as the following:

For ProPILOT Assist

- Driver operational status of the accelerator, brakes, steering, etc.
- Detection status of a vehicle ahead and lane markers
- Vehicle information including distance to vehicle ahead and lateral position
- Information on the operation of the ProPILOT Assist and other crash avoidance features
- ProPILOT Assist malfunction diagnosis information
- External images from the multi-sensing front camera (Available only when the SRS air bag or AEB with Pedestrian Detection system is activated)

To read this supplemental data, special equipment is required. This supplemental data will only be accessed pursuant to the terms and conditions you acknowledge during the enrollment process or through the vehicle's head unit, or as otherwise required or permitted by law. If downloaded, NISSAN and third party vendors entrusted by NISSAN may use the data recorded for the purpose of improving NISSAN’s vehicle safety performance.

NISSAN and third party vendors entrusted by NISSAN will not disclose/provide the recorded data to another third party except:

- With the consent of the vehicle owner or with the consent of the lessee
- In response to an official request from law enforcement, court order, governmental agency, or other legally enforceable request
- For research purposes after the data is modified such that it is no longer tied to a specific vehicle or vehicle owner (anonymized)
- For use as part of NISSAN's defense in litigation.

In the USA: Data collected could vary based on applicable law. If you have any questions regarding the data NISSAN may collect or disclose about you, please consult the Terms and Conditions of the applicable program and visit our Privacy Policy at https://www.nissanusa.com/privacy.html

NISSAN SOFTWARE LICENSE

See “Foreword”.

OWNER’S MANUAL/SERVICE MANUAL ORDER INFORMATION

Genuine NISSAN Service Manuals for this model year and prior can be purchased. A genuine NISSAN Service Manual is the best source of service and repair information for your vehicle. This manual is the same one used by the factory trained technicians working at a NISSAN certified LEAF dealer. Genuine NISSAN Owner’s Manuals can also be purchased.

In the USA:

For current pricing and availability of genuine **NISSAN Service Manuals**, contact:

www.nissan-techinfo.com

For current pricing and availability of genuine **NISSAN Owner’s Manuals**, visit:

https://www.nissanusa.com

In Canada:

To purchase a copy of a genuine NISSAN Service Manual or Owner’s Manual for this model year and prior please contact a NISSAN certified LEAF dealer. For the phone number and location of a NISSAN certified LEAF dealer in your area call the NISSAN Information Center at 1-800-387-0122 and a bilingual NISSAN representative will assist you.

MEMO

11 Index

Number

3D view 304

A

ABS (Anti-lock Braking System) 464
Adjustable luggage floor 244
Advanced Air Bag System 134
Air bag system
- Advanced Air Bag System 134
- Driver and front passenger supplemental knee air bag system 142
- Front and rear seat-mounted side-impact supplemental air bag system 143
- Front central seat-mounted side-impact supplemental air bag system 143
- Front passenger air bag and status light 136
- Roof-mounted curtain side-impact supplemental air bag system 143

Air bag warning labels 146
Air bag warning light 147, 163
Air conditioner
- Air conditioner operation 318
- Air conditioner service 327
- Air conditioner specification label 564
- Air conditioning system refrigerant and lubricant recommendations 327

Air conditioner settings 322
Alarm, How to stop alarm (see vehicle security system) 211
Alcohol, drugs and driving 338
Alert
- Rear Door Alert 228

Android Auto 296
Anti-lock Braking System (ABS) 464
Anti-lock Braking System (ABS) warning light 163
Appearance care
- Exterior appearance care 506
- Interior appearance care 509

Apple CarPlay 296
Approach unlock function 272
Approaching Vehicle Sound for Pedestrians (VSP) system 35
Armrest 91
Audible reminders 169
Automatic
- Door locks 266

Automatic air conditioner and heater 319
Automatic brake hold 354
Automatic Emergency Braking (AEB) system OFF warning light 163
Automatic Emergency Braking (AEB) with Pedestrian Detection system 429
Average energy consumption 195
Average speed 195
Avoiding collision and rollover 337

B

Battery
- 12-volt battery 523
- Battery replacement, Intelligent Key 525
- Battery saver system 221
- Li-ion battery 14

Before starting the EV (Electric Vehicle) system 342
Before using emergency tire puncture repair kit 489
Blind Spot Warning (BSW) 383
Blocking wheels 493
Booster seats 123
Brake
- Anti-lock Braking System (ABS) 464
- Brake fluid 519
- Brake system 462
- Brake system warning light (yellow) 164
- Brakes 521
- Parking brake 351
- Secondary Collision Mitigation Braking (SCMB) 465
- Warning light 160

Brake system warning light (yellow) 164
Brightness control
- Instrument panel 158

Bulb check/instrument panel 159
Bulb replacement 528

C

Card holder 248
Cargo light 256
Charge port light 287
Charger
- USB (Universal Serial Bus) charging connector 230
- Wireless charger 231

Charging
- Amperage limit 71
- Charge limit 71
- Charge port lid 285
- Charge schedule 71

Charging methods 71
Charging related indicator lights 75
Charging status indicator light 75
Charging troubleshooting guide 79
How to DC Fast Charge 67
Immediate charge 74
Precautions on charging 40
Specifications 560
Checking
Checking coolant level 518
Child restraints
Booster seats 123
LATCH system 108
Precautions on child restraints 106
Child restraints 106
Child safety 103
Child safety rear door lock 266
Chimes
Seat belt warning light and chime 98, 162
Chimes, Audible reminders 169
Cleaning exterior and interior 506, 509
Climate control
Climate Schedule 324
Clock 203
Cold weather driving 481
Connection to Roadside Assistance 484
Console box 246
Conventional (fixed speed) cruise control 424
Coolant
Changing coolant 518
Checking coolant level 518
Recommended fluids/lubricants and capacities 558
Cooling system 516
Corrosion protection 512
Cruise control
Conventional (fixed speed) cruise control 424
Cup holders 243

D

Daytime Running Lights (DRL) system 222
Defroster switch, Rear window and outside mirror defroster switch 215
Dimensions 562
Dimming Panoramic Roof with heat shielding 254
Display
Head Up Display (HUD) 206
Vehicle information display 170
Drive Computer 195
Drive Mode Selector 357
Driver and front passenger supplemental knee air bag 142
Driver Assistance systems 359
Driving
Cold weather driving 481
Drive Mode Selector 357
Driving vehicle 343
Precautions when starting and driving 333
Driving vehicle 343

E

e-Step indicator 158
e-Step system 348
Easy-Fill Tire Alert system 336
ECO Drive Report 202
ECO mode 358
Efficient use of your vehicle 31
Elapsed time 195
Electric power steering 461
Electric power steering warning light 164
Electric power steering warning light (red) 161
Electric shift control system warning light 161
Electric Vehicle screen 36
Emblem light 223
Emergency Call (SOS) button 241
Emergency shut-off system 22
Emergency tire puncture repair kit 486, 540
Emission control system warranty 573
enter storage 246
Estimated driving range 157
EV Characteristics 23
EV system
Emergency EV system shut off 341, 485
EV system 14
EV system warning light 165
EV unique information 33
Event Data Recorders (EDR) 573
EVSE (Electric Vehicle Supply Equipment)
Control box indicator light 76
Explanation of scheduled maintenance items 545

F

F.M.V.S.S./C.M.V.S.S. certification label 563
Flashers (See hazard warning flasher switch) 484
Flat tire 485
Flat towing 570
Floor mat cleaning 510
Fluid
Brake fluid 519
Coolant 516

Recommended fluids/lubricants and capacities 558
Window washer fluid 521
Flush Door Handle 262
Forward Driving Aids 359
Front manual seat adjustment 87
Front passenger air bag and status light 136
Front seat, Front seat adjustment 86
Fuses 527

G

Garage mode system 284
Gauge
Gauge 153
Odometer 155
Speedometer 155
Gear box oil 519
General maintenance 542
Glove box 246

H

Hands On Detection 427
Hazard warning flasher switch 484
Head restraints/headrests 92
Head Up Display (HUD) 206
Headlights
Bulb replacement 528
Headlight switch 216
Heated seats 225
Heated steering wheel 223
Heater
Heater and air conditioner operation 318
High voltage precautions 20
Hill start assist system 469
Hood release 279
Hook
Luggage hook 248
Horn 223
How to DC Fast Charge 67

I

If the Li-ion battery becomes completely discharged 500
Immediate charge 74
Immobilizer system 211
Indicator
Lights 163
Vehicle information display 170
indicator light
Electronic parking brake warning light 161
Inside mirror 289
Installing tire 496
Instrument brightness control 158
Intelligent Around View® Monitor 298
Intelligent Auto Headlight system 217
Intelligent Blind Spot Intervention (I-BSI) 391
Intelligent Cruise Control (ICC) 420
Intelligent Driver Alertness (I-DA) 450
Intelligent Forward Collision Warning (I-FCW) 442
Intelligent Key button operation light 277
Intelligent Key system
Intelligent Key system 267
Key operating range 269
Key operation 270
Remote keyless operation 274
Intelligent Lane Intervention (I-LI) 377
Interior light replacement 528
Interior light switch 255
Interior lights 255
Invisible Hood View 305
ISOFIX child restraint 108

J

Jacking up vehicle 492
Jump starting 497

K

Key
Power switch positions 340
Keyless entry
With Intelligent Key system (See Intelligent Key system) 274
Keys 260

L

Labels
Air bag warning labels 146
Air conditioner specification label 564
F.M.V.S.S./C.M.V.S.S. certification label 563
Motor serial number 563
Tire and Loading information label 531, 564
Vehicle identification number (VIN) 563
Lane Departure Warning (LDW) 372
LATCH system 108
Li-ion battery 14
Li-ion battery available charge gauge 156
Li-ion battery cooler 17
Li-ion battery heater 17
Li-ion battery temperature control system 17
License plate, Installing front license plate 565

Liftgate
Auto closure 285
Liftgate 280
Manual liftgate 280
Power liftgate 281
Liftgate release lever 285
Light
Air bag warning light 147
Bulb replacement 528
Cargo light 256
Headlight switch 216
Headlights bulb replacement 528
Indicator lights 163
Interior lights 255
Map lights 255
Rear personal lights 256
Vanity mirror lights 256
Warning lights, indicator lights and audible reminders 159
Lights, Exterior and interior light replacement 528
Lithium ion (Li-ion) battery 14
Loading information (See vehicle loading information) 566
Lock
Automatic door locks 266
Door locks 262
Power door lock 262
Low battery charge warning light 165
Low tire pressure warning light 165
Low tire pressure warning system (See Tire Pressure Monitoring System (TPMS)) 333
Luggage
Adjustable luggage floor 244
Luggage hooks 248

M

Maintenance
12-volt battery 523
General maintenance 542
Maintenance precautions 514
Maintenance requirements 542
Maintenance schedules 546
Seat belt maintenance 103
Maintenance schedules 546
Manual front seat adjustment 87
Map lights 255
Master warning light 162, 167
Mechanical key (Intelligent Key system) 261
Memory seat 292
Meters and gauges 153
Mirror
Inside mirror 289
Outside mirrors 290
Vanity mirror 292
Motor 560
Motor compartment 516
Moving Object Detection (MOD) 313

N

Neutral hold mode 346
NEUTRAL mode 358
NISSAN SOFTWARE LICENSE 575
NISSAN Vehicle Immobilizer System 211

O

Odometer 155
Off-road recovery 337
Oil
Gear box oil 519
Recommended fluids/lubricants and capacities 558
Other lights 168
Outside air temperature 203
Outside mirrors 290
Owner's Manual/Service Manual order information 575

P

Panic alarm 276
Parking
Parking brake 351
Parking on hills 460
Parking Aids 359
Parking brake
Electronic parking brake warning light 161
PERSONAL mode 358
Power
Electric power steering 461
Power door lock 262
Power outlet 229
Power windows 250
Power economy 459
Power meter 155
Power outlet
Vehicle to Load (V2L) system 233
Power switch 339
Power switch positions 340
Precautions
Braking precautions 462
Charging 40
Child restraints 106
High voltage precautions 20
Maintenance 514
Road accident precautions 21

Seat belt usage 96
SRS 127
When starting and driving 333
Preparing tools 492
ProPILOT Assist Systems 409
ProPILOT Assist Systems limitations 414
Push starting 501
Push-button power switch 339

R

RAB system 453
Radio antenna 327
Rapid air pressure loss 337
Rear Automatic Braking (RAB) 453
Rear Automatic Braking (RAB) system OFF warning light 167
Rear Cross Traffic Alert (RCTA) 402
Rear Door Alert 228
Rear door lock, Child safety rear door lock 266
Rear Driving Aids 359
Rear personal lights 256
Rear seats 89
Rear Sonar System (RSS) 476
Rear window and outside mirror defroster switch 215
Recommended fluids/lubricants and capacities 558
Recorders, Event data 573
Registering in another country 562
Remote keyless entry function, For Intelligent Key system 274
Removing tire 494
Repairing flat tire 486
Replacing tires 492
Reporting safety defects 572
Road accident precautions 21
Road Assistance 484
Rollover 337
Roof
Roof rack 249

S

Safety
Child seat belts 103
Reporting safety defects 572
Scene guide
Charging after driving 30
Charging the Li-ion battery 24
Driving the vehicle 27
Parking the vehicle 29
Starting your vehicle 26
Seat adjustment
Front manual seat adjustment 87
Front power seat adjustment 87
Front seats 86
Seat belt(s)
Child safety 103
Infants 104
Injured persons 99
Larger children 104
Precautions on seat belt usage 96
Pregnant women 99
Seat belt cleaning 511
Seat belt extenders 102
Seat belt hook 102
Seat belt maintenance 103
Seat belt warning light and chime 98, 162
Seat belts 96
Seat belts with pretensioners 145
Shoulder belt height adjustment 101
Small children 104
Three-point type with retractor 99
Seat(s)
Heated seats 225
Memory seat 292
Seats 85
Secondary Collision Mitigation Braking (SCMB) 465
Security system 210
Security system (NISSAN Vehicle Immobilizer System), EV system start 211
Security system, Vehicle security system 210
Servicing air conditioner 327
Shift position indicator 158
Shifting
Electric shift control system 343
Shoulder belt height adjustment, For front seats 101
Side Driving Aids 359
Soft bottle holders 244
Sonar
Front and rear sonar system 470
Rear Automatic Braking (RAB) 453
Rear Sonar System (RSS) 476
SOS button (See Emergency Call (SOS) button) 241
Speedometer 155
SPORT mode 358
SRS
Precautions on SRS 127
Starting
Before starting the EV (Electric Vehicle) system 342
Jump starting 497
Push starting 501

Starting EV system 343
State of charge display 202
Status light, Front passenger air bag 136
Steering
Electric power steering 461
Heated steering wheel 223
Tilt/telescopic steering 288
Steering Assist 425
Steering Assist switch 228
Steering wheel 288
Stopping vehicle 488
Storage 243
Stowing damaged tire and tools 497
Sun visors 288
Sunglasses holder 247
Supplemental air bag warning labels 146
Supplemental air bag warning light 147, 163
Supplemental Restraint System (SRS) 127
Switch
Door lock indicator light 266
Drive Mode Selector 357
Emergency Call (SOS) button 241
Hazard warning flasher switch 484
Headlight switch 216
Immediate charge switch 74
Intelligent Auto Headlight switch 217
Memory seat switch 292
Power door lock switch 266
Power switch 343
Rear window and outside mirror defroster switch 215
Steering Assist switch 228
Turn signal switch 222
Wiper and washer switch 212

T

Theft (NISSAN Vehicle Immobilizer System), EV system start 211
Timer
Charge schedule 71
Climate Schedule 324
Tire
Emergency tire puncture repair kit 486
Installing tire 496
Preparing tools 492
Removing tire 494
Repairing flat tire 486
Stowing damaged tire and tools 497
Tire Pressure Low - Add Air warning (Tire Pressure Low) 181
Tire pressure, Low tire pressure warning light 165
Tires
Easy-Fill Tire Alert system 336
Flat tire 485
Low tire pressure warning system 333
Tire and Loading information label 531, 564
Tire chains 537
Tire dressing 508
Tire pressure 529
Tire pressure monitoring system (TPMS) 333
Tire Pressure Monitoring System (TPMS) 485
Tire rotation 538
Types of tires 536
Uniform tire quality grading 571
Wheels and tires 529
Touch screen display 204
Towing
Tow truck towing 501
Towing a trailer 570
Towing recommended by NISSAN 502
TPMS with Easy Fill Tire Alert 336
TPMS, Tire pressure monitoring system 333
TPMS, Tire pressure warning system 485
Traction motor
Traction motor serial number 563
Traffic Sign Recognition (TSR) 368
Trailer towing 570
Transmitter, With Intelligent Key system (See Intelligent Key system) 274
Traveling or registering in another country 562
Trip computer 194
Trip odometer 195
Troubleshooting guide
Driver Assistance systems 362
Turn signal switch 222

U

Underbody cleaning 507
Uniform tire quality grading 571
Unlocking with inside handle 265
USB (Universal Serial Bus) charging connector 230

V

Vanity mirror 292
Vanity mirror lights 256
Vehicle
Dimensions 562
Identification number (VIN) 563
Loading information 566

Recovery (freeing a stuck vehicle) 503
Security system 210
Vehicle Dynamic Control (VDC) system 466
Vehicle Dynamic Control (VDC) system 466
Vehicle information display
Settings 172
Vehicle information display 170
Vehicle information display warnings and indicators 179
Vehicle to Load (V2L) system 233
Ventilators 317
VSP system 35

W

Walk away lock function 273
Warning
Blind Spot Warning (BSW) 383
Driver Assistance systems trouble-shooting guide 362
Hazard warning flasher switch 484
Intelligent Forward Collision Warning (I-FCW) 442
Lane Departure Warning (LDW) 372
Lights 159
Rear Door Alert 228
Tire Pressure Low - Add Air warning 181
Tire pressure monitoring system (TPMS) 333
Tire Pressure Monitoring System (TPMS) 485
Vehicle information display 170
Warning lights, indicator lights and audible reminders 159
Warning labels, Air bag warning labels 146
Warning light
12-volt battery charge warning light 159
Air bag warning light 147, 163
Anti-lock Braking System (ABS) warning light 163
Brake system warning light (yellow) 164
Brake warning light 160
Electric power steering warning light 164
Electric power steering warning light (red) 161
Electric shift control system warning light 161
EV system warning light 165
Low battery charge warning light 165
Low tire pressure warning light 165
Seat belt warning light and chime 98, 162
Warranty, Emission control system warranty 573
Washer switch
Wiper and washer switch 212
Washing 506
Waxing 507
Wheel/tire size 561
Wheels and tires 529
Care of wheels 507
Cleaning aluminum alloy wheels 508
Window washer fluid 521
Window(s)
Cleaning 507
Power windows 250
Windshield deicer 215
Wiper
Replacing wiper blades 520
Wiper and washer switch 212
Wiper blades 520
Wiper and washer switch 212
Wireless charger 231

MEMO

MEMO

MEMO

To view the digital NissanConnect manual, go to
www.nissanquickguide.com/#/guide/2026/leaf/browse
or snap this QR code with an appropriate QR code reader.

Printing : February 2026
Publication No.: OM26E0 0ZE2U1
Printed in the U.S.A.

ZE2-D